CITY OF BELLEVUE
UTILITIES DEPARTMENT

STORM AND SURFACE WATER ENGINEERING STANDARDS

January 2017

http://www.bellevuewa.gov/utilities_codes_standards_intro.htm

Table of contents not included in draft

CHAPTER D1 – GENERAL REQUIREMENTS

TABLE OF CONTENTS

Not included in draft document.

DRAFT

CHAPTER D1 - GENERAL REQUIREMENTS

Dl-01 GENERAL

D1-01.1 Purpose and Basis of Standards

Bellevue has adopted the Department of Ecology December 2014 amendment of the 2012 Stormwater Management Manual for Western Washington (DOE Manual). These Engineering Standards (Standards) set forth the minimum standards for the planning, design, and construction of storm and surface water systems in accordance with the DOE Manual.

The Storm and Surface Water Utility Code, Chapter 24.06 of the Bellevue City Code (BCC), adopted by Ordinance 5905 on October 24, 2016, is the basis for these engineering Standards.

D1-01.1 Drainage Review by Other Agencies

Agencies other than Utilities may require some form of drainage review and impose drainage requirements that are separate from and in addition to the City's drainage requirements. The applicant is responsible for coordinating with these agencies and resolving and conflicts in drainage requirements.

D1-01.2 Drainage Requirements Beyond the Minimum Requirements

Although these standards are intended to apply to physical development within the City, the standards will not apply for all situations. Compliance with these standards does not relieve the Developer of the responsibility to apply conservative and sound professional judgment. These are minimum standards and are intended to assist, but not substitute for competent work by design professionals. The Utility may, at its sole discretion due to special conditions and/or environmental constraints, require more stringent requirements than would normally be required under these standards.

Compliance with these standards does not necessarily mitigate all probable and significant environmental impacts to aquatic biota. Fishery resources and other living components of aquatic systems are affected by a complex set of factors. While employing a specific flow control standard may prevent stream channel erosion or instability, other factors affecting fish and other biotic resources (e.g., increases in stream flow velocities) are not directly addressed by these standards. Likewise, some wetlands, including bogs, are adapted to a very constant hydrologic regime. Even the most stringent flow control standard employed by this manual does not prevent all increases in runoff volume, and it is known that increased runoff can adversely affect wetland plant communities by increasing the duration and magnitude of water level fluctuations. Thus, compliance with this manual should not be construed as mitigating all probable and significant stormwater impacts to aquatic biota in streams and wetlands; additional mitigation may be required.

Additional mitigation may also be required to compensate for loss of critical area habitat functions associated with activities inside the critical area or critical area buffers.

DRAFT

D1-02 SITE PLANNING AND ANALYSIS

Before evaluating project stormwater requirements and starting the process for site design, each project must first conduct site planning to assess existing and proposed post-development conditions. Site planning helps to maximize the potential development site opportunities while reducing project-related stormwater impacts by minimizing impervious areas, loss of vegetation, and the volume and rate of runoff generated that must be subsequently managed on-site.

This section outlines requirements for inventory and analysis of key site conditions, proposed project components, and use of Low Impact Development (LID) as the preferred approach to planning and design.

D1-02.1 Inventory and Analysis of Key Project Components

Performing a comprehensive inventory and analysis is an essential first step to site assessment and planning, and must precede site design. The inventory shall include on- and off-site natural and built conditions that would affect the project design. Policies, land use controls, and legally enforceable restrictions shall also be evaluated and documented.

The following sections provide additional guidance on key project components that can significantly influence the project design. These key components shall be inventoried and analyzed as part of the site assessment and planning step:

- Project boundaries and structures
- Soils
- Critical areas
- Topography
- Hydrologic patterns and features
- Vegetation
- Land use control
- Access
- Utility availability and conflicts

See the City's Geographic Information System (GIS) mapping website for available information that may be used as a resource for creating this inventory of key components, as appropriate.

D1-02.1(a) Project Boundaries and Structures

Project boundaries, nearby structures, and other related issues can directly affect stormwater runoff and Best Management Practice (BMP) designs. The following must be addressed before selecting a stormwater management BMP:

- Project Boundaries - The project boundaries typically define the limits of disturbance and can affect the thresholds and applicable minimum requirements. Project boundaries generally coincide with the right-of-way and/or property line.

DRAFT

- Setbacks - Property lines, adjacent right-of-way boundaries, and setbacks required from each must be identified and considered to evaluate siting of structures.
- Location of Buildings - All existing and proposed buildings must be identified, including all existing and proposed temporary and permanent structures (such as retaining walls) and impervious surfaces (driveways, patios, etc.). Structures on neighboring properties can also affect stormwater BMP selection. Structures within 100 feet of the project boundaries shall be identified on plans as appropriate.
- Foundations and Footing Drains - The type of proposed foundations and footing drains, including location and extent, must be determined. These features can include:
    - Conventional spread footings
    - Pile shaft
    - Basement
    - Footing drains and their associated point of discharge, if applicable
    - Water-tight foundation without footing drains

D1-02.1(b) Soils

The existing soil types present must be evaluated to assess the infiltration capacity of the site and the applicability of various stormwater BMPs. General requirements for infiltration BMPs, including site characterization and infiltration rate determination, are presented in Chapter D5.

D1-02.1(c) Critical Areas

All development within the "Critical Areas Overlay District", which includes any site that is in whole or in part designated as critical area or critical area buffers, must be reviewed and approved pursuant to BCC Part 20.25H, in addition to being subject to all other relevant standards of the BCC. Such areas include streams, wetlands, shorelines, geologic hazard areas, habitat associated with species of local importance, and areas of special flood hazard.

D1-02.1(d) Topography

Understanding the existing site topography is important to implementing LID principles, such as minimizing grading and preserving existing flow paths. Topography will also influence how and where stormwater facilities are incorporated into the site. Important features to assess and document include:

- Steep slopes
- Closed depressions
- Grade breaks
- Roadway grades and elevations

DRAFT

D1-02.1(e) Hydrologic Patterns and Features

To maintain existing hydrologic patterns and important features, on-site hydrologic processes, patterns, and physical features must be understood and documented. This step requires documenting the following feature types, among others found on-site that may influence drainage patterns:

- Streams
- Wetlands
- Native soils and vegetation
- Seeps
- Springs
- Closed depressions
- Drainage swales and ditches
- Signs of erosion

To the extent possible, this step should be undertaken during wet periods. See Figure 1.1 for an example map of hydrologic features for a hypothetical subdivision development.

DRAFT

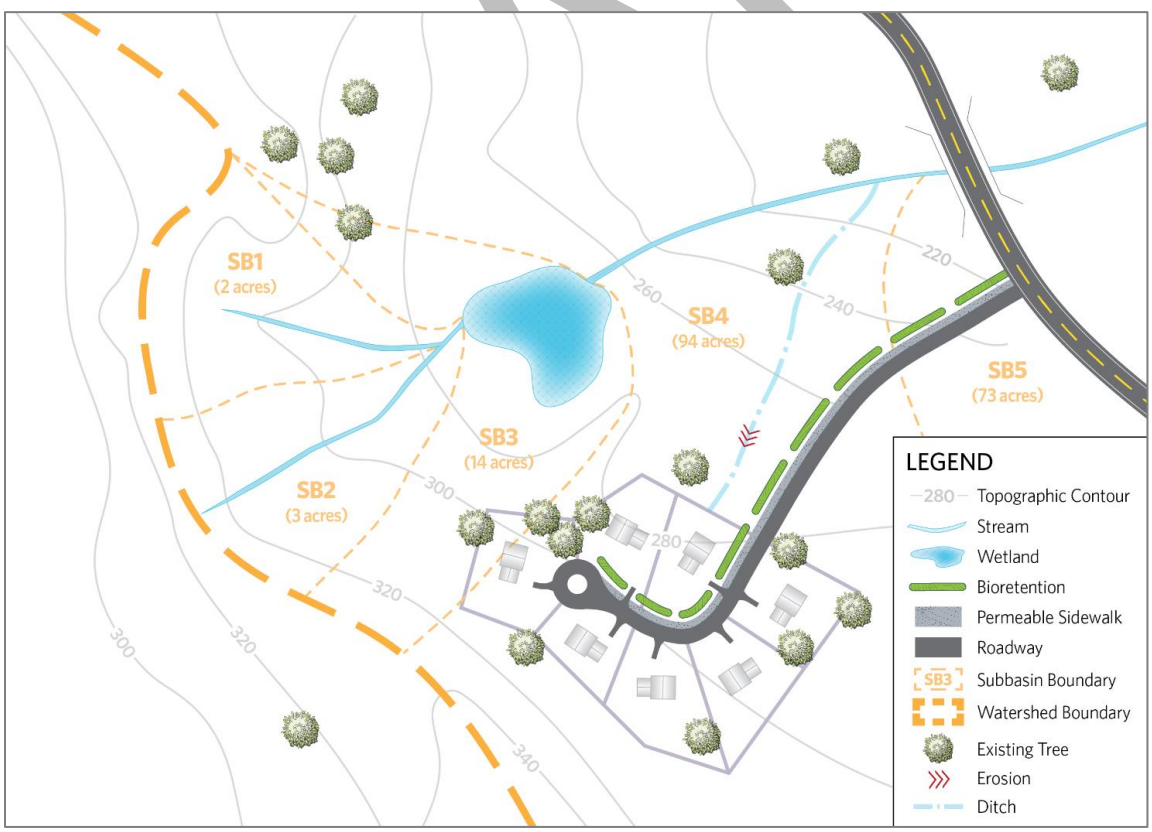

Figure 1.1 – Example Map Documenting Existing Hydrologic Features
Source: 2016 Kitsap County Stormwater Design Manual

Detailed sub-basin delineation provides several advantages as follows:

- Individual practices receive smaller hydraulic and pollutant loads.
- Small-scale practices can be arranged in the project efficiently and save space for other amenities.
- Individual LID BMPs can be accurately sized based on the appropriate tributary drainage areas and their cumulative performance across the site can be evaluated.

D1-02.1(f) Vegetation

Vegetated areas of a project site can be very effective in minimizing stormwater runoff. Existing site vegetation shall be characterized as part of the site assessment, and may be accomplished through the use of aerial imagery, observations recorded during site walks, or other approved methods to delineate forest, pasture, grassed and landscaped areas in the existing conditions. Efforts shall be made to configure the project to minimize disturbance of areas covered by valuable existing vegetation, such as mature trees.

D1-02.1(g) Land Use Controls

Applicable land use controls, such as limitations on hard surface coverage, minimum landscaping requirements, minimum lot area, setback requirements, parking requirements, and site design standards associated with building placement and orientation, shall be analyzed and documented using the following steps:

- Review applicable comprehensive plan designation, zoning classifications, and land use districts that may apply to the site. Land use districts may include requirements for special design review or district overlays.
- Determine whether the Shoreline Master Program applies to the site and comply with applicable guidelines and requirements.
- Consult with the City of Bellevue Development Services Department (DSD) to identify other land use regulations that may allow clustering or other practices intended to minimize impervious surfaces. Examples include Performance-based Developments and Master Plan developments.

D1-02.1(h) Access

Vehicular and pedestrian access, circulation, and parking elements of the built environment shall be identified as part of the site inventory and analysis. Access can often represent a controlling element for the design of a site.

The designer shall consult the City of Bellevue Transportation Design Manual and BCC14.60 for site access. These requirements will establish the number of allowed access points, the width of the access, the spacing of access points between sites on the same or opposite side of the adjacent street right-of-way, and pedestrian circulation requirements along and through the site to the proposed use.

The following steps shall, at minimum, be used to inventory and assess access:

DRAFT

- Map the location of roads, driveways, and other points of ingress and egress within 100 feet of the site.
- Refer to Transportation to identify the classification of the street that will be providing access to the site. Knowing the classification of the abutting street will allow the designer to understand frontage improvements, sight distance requirements, allowed driveway widths, and other geometric design requirements.
- Consult with Transportation to understand any motorized or non-motorized plans that may influence the design of the project.

D1-02.1(i) Utility Availability and Conflicts

The location of wet (e.g., water, sewer, stormwater, etc.) and dry (e.g., power, phone, cable, etc.) utilities shall be identified and the adequacy of these utilities shall be confirmed. If new utilities need to be extended to the site, the applicant will need to understand where the utility will come from, and potentially extend to, and the impact that easements and restrictions may have on the site design.

The following steps shall be used to assess utilities:

- Consult with the utility purveyor(s) to determine the location of wet (e.g., water, sewer, stormwater, etc.) and dry (power, phone, cable, etc.) utilities and discuss the proposed plans. This consultation shall be initiated during the planning phase of the project and extended through final design. Utilities Locate Service number is 811.
- Map existing utilities and utility easements on the site plan. Note the setbacks from the easements that may be required.
- Map existing utilities that may need to be moved and new utilities to be extended to the site.
- Design appropriate measures to move or protect utilities, as needed.

D1-02.2 Site Design Considerations

To manage stormwater effectively and efficiently, site design for both construction and the post-development condition must be done in unison with the design and layout of the stormwater infrastructure. Efforts should be made, as required and encouraged by City of Bellevue development codes, such as, Land Use Code Chapters 20.20.460 Impervious Surface, 20.20.900 Tree Retention and Replacement, 20.25E Shorelines, and 20.25H Critical Areas, to conserve natural areas, retain native vegetation, reduce impervious surfaces, and integrate stormwater controls into the existing site drainage patterns to the maximum extent feasible. With careful planning, these efforts will not only help achieve the minimum requirements contained in the Stormwater Code, but can also reduce impacts from development projects and reduce the costs of water quality treatment and flow control.

Before designing the site and stormwater infrastructure, consider the following:

- Stormwater:

DRAFT

  - Identify the approved point(s) of discharge and conveyance system flow path(s) based on both piped conveyance and natural topography.
  - Using LID principles, manage stormwater runoff (quantity and quality) as close to the point of origin as possible.
  - Minimize the use of conventional stormwater collection (catch basins) and piped conveyance infrastructure.
  - Use LID BMPs (e.g., dispersion, infiltration, and reuse) where feasible.
  - Fit development to the terrain to minimize land disturbance and loss of natural vegetation, especially mature coniferous forest.
- Landscaping:
  - Maintain and use natural drainage patterns.
  - Preserve natural features and resources, including trees per the Land Use Code BCC 20.20.900
  - Create a multifunctional landscape using hydrology as a framework for landscape design.
  - Confine and phase construction activities to minimize disturbed areas, and minimize impacts to environmentally critical areas and their associated buffers.
  - Plant new trees in proximity to ground level impervious surfaces for on-site stormwater management and/or flow control credit.
  - Minimize or prevent compaction of and protect soils.
  - Amend landscape soils to promote infiltration.
- Impervious and Pervious Surfaces:
  - For sites with varied soil types, locate impervious areas over less permeable soil (e.g., till). Minimize development over more porous soils. Use porous soils by locating bioretention, permeable pavement, or other approved infiltration methods over them.
  - Cluster buildings together.
  - Minimize impervious surfaces (e.g., buildings, sidewalks).
  - Minimize pollution-generation hard surface (PGHS) (e.g., areas subject to vehicular use such as driveways and parking strips).
  - Minimize pollution-generating pervious surfaces (PGPS) (e.g., fertilized lawns, flower beds, etc.). Consider landscaping with native vegetation.

D1-02.3 Site Mapping

Through the assessment process discussed in Chapter D1-02.1, map layers are produced to delineate important site features. These map layers are combined to provide a composite site map that guides the layout of streets, structures, and other site features; preservation of

DRAFT

existing vegetation; and the overall location of the development envelope(s). This composite site map should be used for all development types (i.e., Single Family Residential, commercial, transportation, etc.) and will form the basis for the site design considerations described in Chapter D1-02.2. Figure 1.2 illustrates the development of a composite site map.

DRAFT

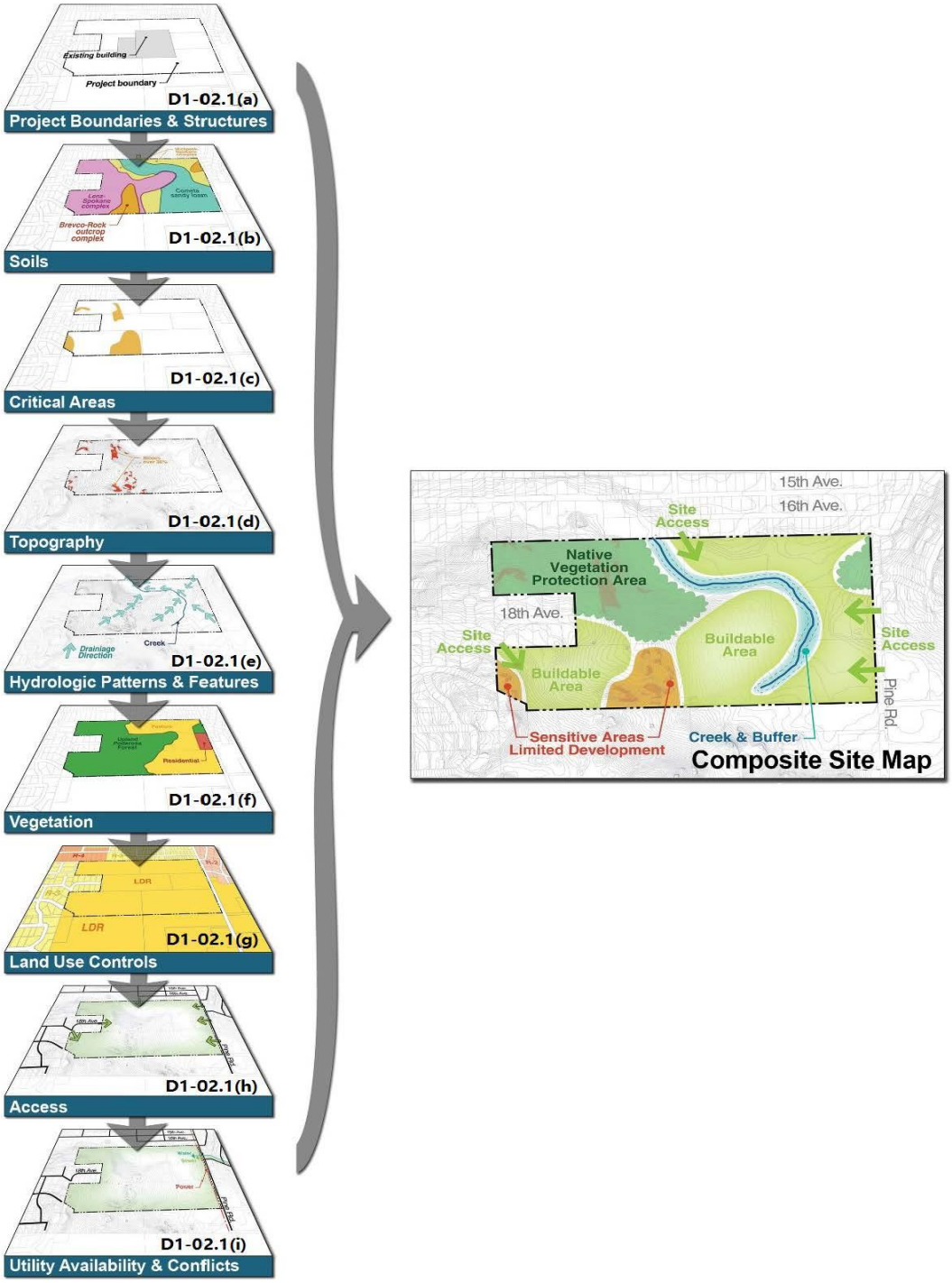

Figure 1.2 - Example Composite Site Map

Source: Adapted from the LID Technical Guidance Manual for Puget Sound (PSP and WSUPCE 2012)

D1-02.4 Submittal Requirements

A Site Assessment and Planning Packet must be completed to document the assessment of key project components and site design considerations discussed above in this chapter. Refer to Chapter D2 for details on submittal requirements for permit review.

D1-03 DETERMINING MINIMUM REQUIREMENTS

This chapter contains six basic steps used to determine which minimum requirements for on-site stormwater management, flow control, and water quality treatment apply to a project site:

- *Step 1* – Define the boundaries of the project site.
- *Step 2* – Identify the receiving water and downstream conveyance.
- *Step 3* – Review minimum requirement exemptions.
- *Step 4* – Calculate new plus replaced hard surface and native vegetation conversion.
- *Step 5* – Calculate new plus replaced pollution generating surface.
- *Step 6* – Determine which minimum requirements apply.

Note that these steps are focused on determining applicable minimum requirements for on-site stormwater management, flow control, and water quality treatment specifically. Applicants must also review and comply with all other minimum requirements listed in Chapter D1-04 of this manual, including preparation of a stormwater site plan, control of site construction stormwater, source control, preservation of natural discharge location, wetland protection and operation and maintenance.

Each of the seven steps is described in further detail below.

Step 1 – Define the Boundaries of the Project Site

The boundaries of the project site must contain all land disturbing activities, and all new and replaced hard surfaces. The project site may also include contiguous areas that abut the lot or parcel that triggered the right-of-way or utility improvements.

Step 2 – Identify the Receiving Water and Downstream Conveyance

For minimum requirement purposes, runoff leaving the project site is classified based on the type of receiving water and drainage system into which the project site discharges. The applicant must determine the receiving water or point of discharge for the stormwater runoff from the project site (e.g., wetland, lake, creek, etc.). The minimum requirements vary considerably by type of receiving water and downstream conveyance; therefore, it is important to determine and specify the receiving water and type of downstream conveyance.

In addition, the sequence of the discharge should also be noted. For example, projects discharging to a drainage system within a creek basin that then discharge to a designated receiving water must meet the requirements applicable to creek basins.

An overview of the types of receiving waters and drainage systems is provided below:

DRAFT

- Wetlands - Designated under BCC Part 20.25H.
- Flow Control-Exempt Receiving Waters – Receiving waters approved by Ecology as having sufficient capacity to receive discharges of drainage water. Stormwater discharges to Puget Sound are exempt from the flow control requirement provided that the project meets all restrictions included in the Appendix 1-E.
- Non-Flow Control-Exempt Receiving Waters - Include creeks, lakes, or other receiving water bodies not listed in Appendix I-E of the DOE Manual.
- Critical Areas - Refers to those areas designated in BCC Part 20.25H, which have a high potential for stormwater quantity or quality problems. In order to mitigate or eliminate potential drainage-related impacts on critical areas, the Director may require drainage improvements in excess of those required by the minimum requirements.
- Conveyance Systems – May include manmade conveyance elements (e.g., pipes, ditches, outfall protection). While downstream conveyance systems do not affect minimum requirements applicability, the applicant must demonstrate that the proposed project would not aggravate existing problems or create new problems for those systems. Refer to Chapter D4 for conveyance system design standards.

Receiving waters may also have specific management plans that have established specific requirements. Such management plans could potentially affect how the minimum requirements should be applied to a given project. Examples of plans to review, as applicable, include:

- Watershed or Basin Plans - Can be developed to cover a wide variety of geographic scales (e.g., Water Resource Inventory Areas, or sub-basins of a few square miles), and can be focused solely on establishing stormwater requirements (e.g., "Stormwater Basin Plans"), or can address a number of pollution and water quantity issues, including urban stormwater (e.g., Puget Sound Non-Point Action Plans).
- Water Clean-up Plans - Establish a Total Maximum Daily Load (TMDL) of a pollutant or pollutants in a specific receiving water or basin, and to identify actions necessary to remain below that maximum loading. The plans may identify discharge limitations or management actions (e.g., use of specific treatment facilities) for stormwater discharges from new and redevelopment projects.
- Groundwater Management Plans (Wellhead Protection Plans) - Protect ground water quality and/or quantity, these plans may identify actions required of stormwater discharges.
- Lake Management Plans – Can be developed to protect lakes from eutrophication due to inputs of phosphorus from the drainage basin. To date, Larsen Lake, Phantom Lake, and Lake Sammamish have been identified as phosphorus-limited. Control of phosphorus from new and redevelopment sites is required in these basins.

DRAFT

Step 3 – Review Minimum Requirements Exemptions

The activities described in BCC 24.06.065(B) are exempt from the minimum requirements, even if such practices meet the definition of new development or redevelopment. See discussion in Step 6 below regarding other permit requirements that may apply for projects that are otherwise exempt from meeting these minimum requirements.

Step 4 – Calculate New Plus Replaced Hard Surface and Native Vegetation Conversion

The thresholds triggering specific minimum requirements are based on the amount of the project's new and replaced hard surface and converted native vegetation. Note that open, uncovered retention or detention facilities shall not be considered as hard surfaces for the purposes of determining whether the minimum requirement thresholds are exceeded. However, these facilities shall be considered hard surfaces for the purposes of stormwater facility sizing. Permeable pavement, vegetated roofs and areas with underdrains (e.g., playfields, athletic fields, rail yards) shall be considered as hard surfaces for the purposes of determining whether the minimum requirement thresholds are exceeded.

The amount of native vegetation that is removed and replaced with lawn, landscaping, and pasture groundcover must also be calculated. New plus replaced hard surface areas and converted native vegetation shall be quantified separately for work within and outside the right-of-way.

Figure 1.3 illustrates an example of how to determine new and replaced hard surfaces for a hypothetical Single Family Residential redevelopment project. In this example, the existing single-story house (30' x 50', or 1,500 square feet existing roof area) will be demolished and replaced with a 2-story house (40' x 70' = 2,800 square feet of new and replaced roof area). In order to calculate the new plus replaced hard surfaces in this step, existing and removed hard surfaces also need to be tabulated, as follows:

- Existing Hard Surface (476 square feet) – Includes the existing hard surfaces to remain after construction, including the existing driveway (10' x 20' = 200 square feet), shed (8' x 12' = 96 square feet), and the portion of the existing walkway to remain (180 square feet).
- New Hard Surface (1,425 square feet) – Includes the portion of the proposed project site that was not previously covered in hard surface, but that will be covered in hard surface as a result of proposed roof area expansion, extension of the existing walkway, and new permeable pavement patio. New hard surfaces include the new building footprint (2,800 square feet) minus the existing building footprint (1,500 square feet) minus the portion of the existing back deck and walkway to be replaced (120 square feet). In addition to the new roof area, new hard surfaces include the new permeable pavement patio (10' x 12' = 120 square feet) and the new extension of the existing walkway (125 square feet), extending from the existing walkway to remain to the new permeable pavement patio. Thus, the total new hard surface area in this example is 1,425 square feet (2,800 – 1,500 – 120 + 120 + 125 [square feet]).

DRAFT

- Replaced Hard Surface (1,620 square feet) - Includes the part of the proposed new house footprint that overlaps the existing house footprint. This includes the 1,500 square feet of existing building footprint plus the 120 square feet of patio and walkway area behind the existing house, for a total of 1,620 square feet of replaced hard surface.
- Removed Hard Surface (30 square feet) – Includes the portion of the existing walkway that will be removed when the walkway is extended. This piece of removed walkway is not replaced with any other hard surface. Therefore, it is tabulated as removed.

The total new plus replaced hard surface in this example is calculated as 3,045 square feet (1,425 + 1,620). Note, there is zero (0) native vegetation conversion in this example.

As illustrated in this example and as may be typical for many development sites, the existing, new, replaced, and removed hard surface areas are irregular in shape, and they may overlap each other in irregular patterns. Note, for example, the irregular polygon shapes for the existing back patio and walkway behind the existing house, to be replaced by new roof, and the small portion of the existing walkway that will be removed when the extended walkway is connected to the existing walkway to remain. Due to these irregular shapes, the areas should be calculated using area take-off methods from scaled drawings or in AutoCAD to accurately delineate and calculate the respective areas for these various features.

DRAFT

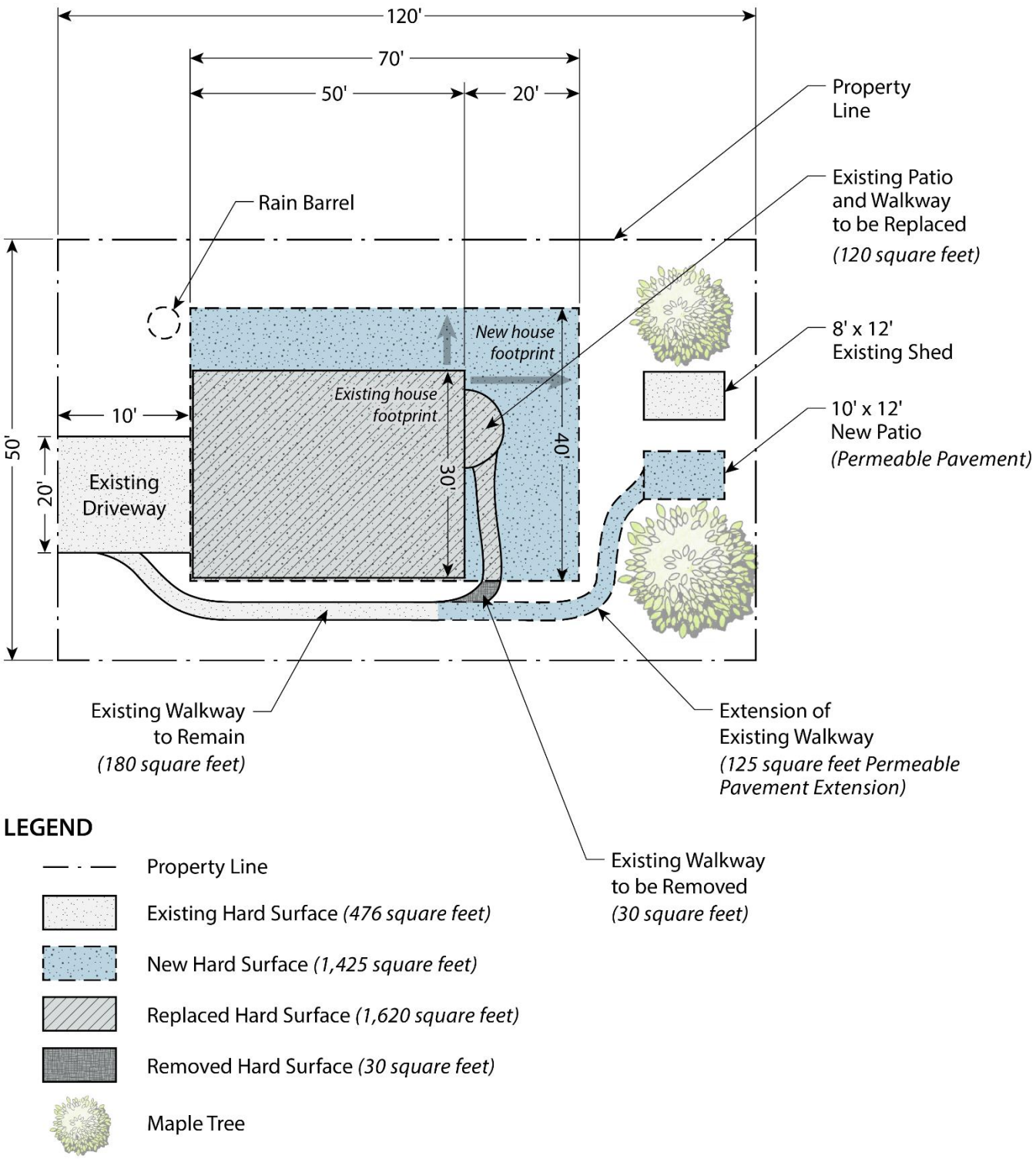

Figure 1.3 –Example Determination of New and Replaced Hard Surfaces.
Source: 2016 Kitsap County Stormwater Design Manual

Step 5 – Calculate New Plus Replaced Pollution Generating Surface

The thresholds triggering specific minimum requirements for runoff treatment are based on the total amount of the project's new plus replaced PGHS and PGPS, as these areas are considered a significant source of pollutants in stormwater runoff. PGHS examples include areas subject to vehicular use (including permeable pavement); certain industrial activities; and outdoor storage of erodible or leachable materials, wastes, or chemicals. Metal roofs are also considered to be PGHS unless they are coated with an inert, non-leachable material (e.g., baked-on enamel coating). Examples of PGPS include lawns and landscaping areas subject to the use of fertilizers and pesticides.

New plus replaced PGHS and PGPS shall be quantified separately for work within and outside the right-of-way.

Step 6 – Determine Which Minimum Requirements Apply

Steps 1 through 5 produce the information necessary for determining the minimum applicable stormwater requirements. These minimum requirements are found in Chapter D1-04. The charts found in Figure 1.4 and Figure 1.5 should be consulted. See Chapter D2 for plan and submittal requirements relating to the minimum requirements and any additional permit requirements that apply.

D1-04 MINIMUM REQUIREMENTS FOR NEW AND REDEVELOPMENT

This chapter identifies the nine minimum requirements for stormwater management that pertain to new development and redevelopment sites.

D1-04.1 Project Applicability

Not all of the minimum requirements apply to every development or redevelopment project. The applicability varies depending on the project type and size. This section identifies thresholds that determine the applicability of the minimum requirements to different projects.

Use the flow charts in Figure 1. and Figure 1.5 to determine which of the minimum requirements apply. The minimum requirements themselves are defined in detail in Chapter D1-04.2.

DRAFT

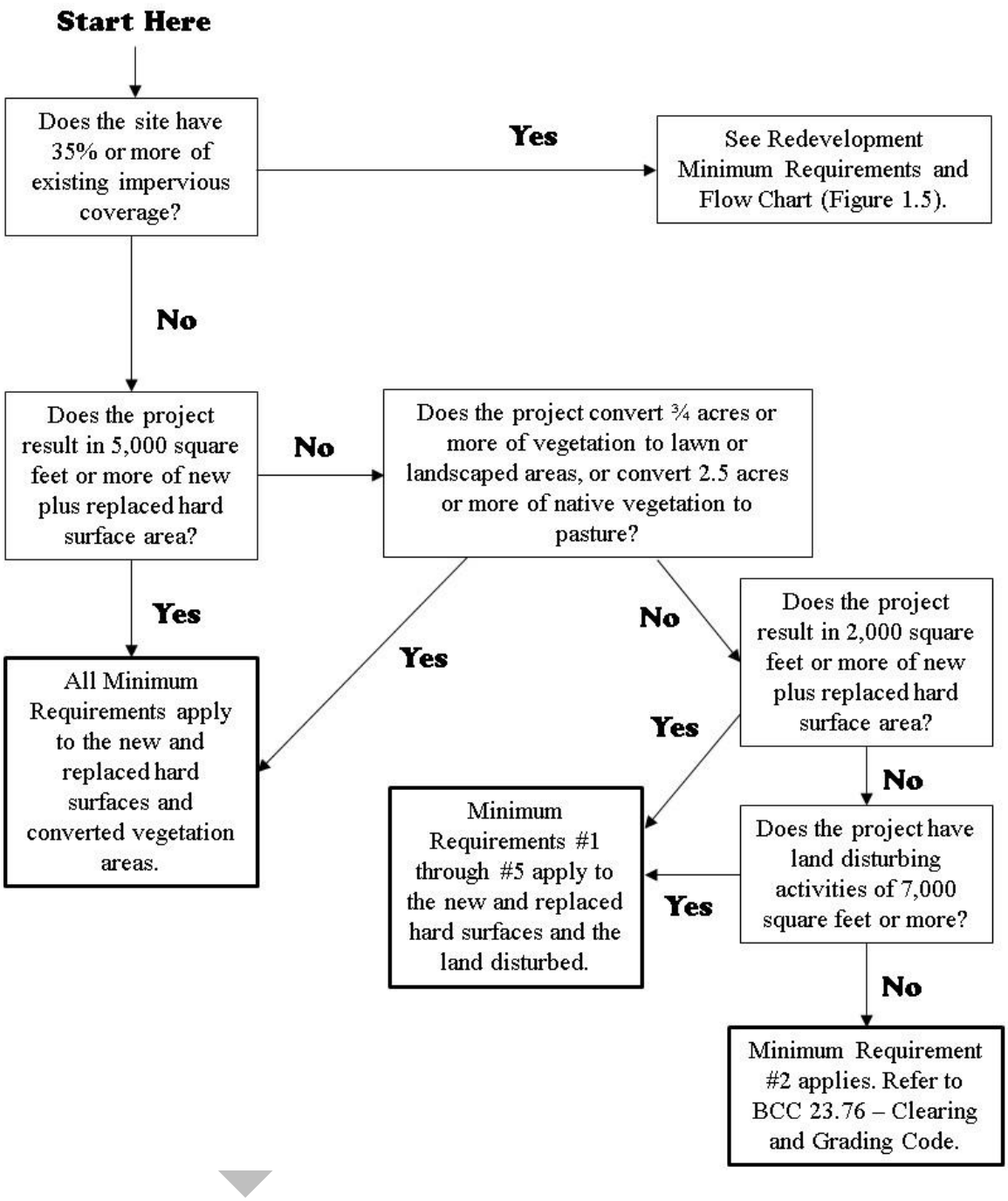

Figure 1.4 – Flow Chart for Determining Minimum Requirements for New Development Projects

Source: Adapted from Figure 2.4.1 of Volume I of the DOE Manual.

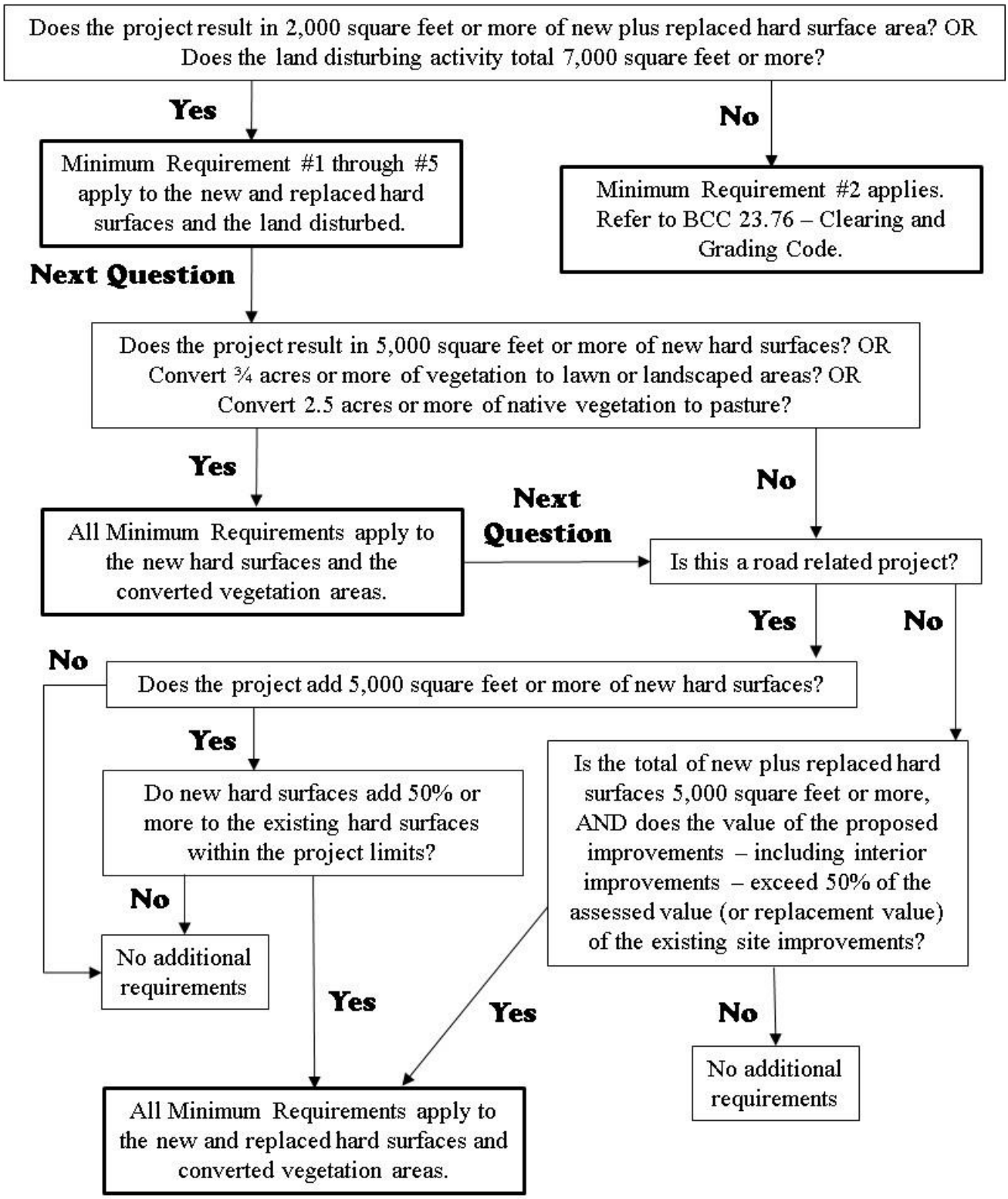

Figure 1.5 – Flow Chart for Determining Minimum Requirements for Redevelopment Projects

Source: Adapted from Figure 2.4.2 of Volume I of the DOE Manual.

D1-04.1(a) New Development

All new development shall comply with Minimum Requirement #2 – Construction Stormwater Pollution Prevention.

The following new development shall comply with Minimum Requirements #1 through #5 for the new and replaced hard surfaces and the land disturbed:

- Results in 2,000 square feet or more of new plus replaced hard surface area; or
- Includes land disturbing activity of 7,000 square feet or more.

The following new development shall comply with Minimum Requirements #1 through #9 for the new and replaced hard surfaces and the converted vegetation areas:

- Results in 5,000 square feet or more of new plus replaced hard surface area; or
- Converts ¾ acres or more of vegetation to lawn or landscaped areas; or
- Converts 2.5 acres or more of native vegetation to pasture.

For purposes of applying the above thresholds to a proposed single family residential subdivision (i.e., a plat or short plat project), assume 4,000 sq. ft. of hard surface (8,000 sq. ft. on lots of 5 acres or more) for each newly created lot, unless the applicant has otherwise formally declared other values for each lot in the corresponding complete land division application. Where land use regulations restrict maximum hard (or impervious) surfaces to smaller amounts, those maxima may be used.

Regional stormwater facilities may be used as an alternative method of meeting Minimum Requirements #6, #7, and #8, through documented engineering reports detailing how the proposed facilities meet these requirements for the sites that drain to them. Such facilities must be operational prior to and must have capacity for new development.

Basin planning is encouraged and may be used to tailor Minimum Requirements #5 through #8. Basin planning may be used to support alternative treatment, flow control, and/or wetland protection through construction of regional stormwater facilities. Such facilities must be operational prior to and must have capacity for new development.

Where new development projects require improvements (e.g., frontage improvements) that are not within the same threshold discharge area, the Director may allow the minimum requirements to be met for an equivalent (flow and pollution characteristics) area that drains to the same receiving water.

D1-04.1(b) Redevelopment

All redevelopment shall comply with Minimum Requirement #2.

The following redevelopment shall comply with Minimum Requirements #1 through #5 for the new and replaced hard surfaces and the land disturbed:

- Results in 2,000 square feet or more of new plus replaced hard surface area; or
- Includes land disturbing activity of 7,000 square feet or more.

DRAFT

The following redevelopment shall comply with Minimum Requirements #1 through #9 for the new hard surfaces and converted vegetation areas:

- Adds 5,000 square feet or more of new hard surfaces or;
- Converts ¾ acres or more of vegetation to lawn or landscaped areas; or
- Converts 2.5 acres or more of native vegetation to pasture.

The Director may allow the minimum requirements to be met for an equivalent (flow and pollution characteristics) area within the same site. For public roads projects, the equivalent area does not have to be within the project limits, but must drain to the same receiving water.

For road-related projects, runoff from the replaced and new hard surfaces (including pavement, shoulders, curbs, and sidewalks) and the converted vegetated areas shall meet all the minimum requirements if the new hard surfaces total 5,000 square feet or more and total 50% or more of the existing hard surfaces within the project limits. The project limits shall be defined by the length of the project and the width of the right-of-way.

Other types of redevelopment projects shall comply with Minimum Requirements #1 through #9 for the new and replaced hard surfaces and the converted vegetated areas if the total of new plus replaced hard surfaces is 5,000 square feet or more, and the valuation of proposed improvements – including interior improvements – exceeds 50% of the assessed value of the existing site improvements.

If runoff from new hard surfaces, converted vegetation areas, and replaced hard surfaces is not separated from runoff from other existing surfaces within the project site or the site, the guidance in Appendix III-B of the DOE Manual for off-site inflow shall be used to size detention facilities (where used).

D1-04.2 Minimum Requirements

This section describes the minimum requirements for stormwater management at development and redevelopment sites. Section D1-04.1 shall be consulted to determine which requirements apply to any given project and Figures 1.4 and 1.5 shall be consulted to determine whether the minimum requirements apply to new surfaces, replaced surfaces, or new and replaced surfaces. Chapter D5 details BMPs for use in meeting the minimum requirements.

D1-04.2(a) Minimum Requirement #1 - Preparation of Stormwater Site Plans

All projects meeting the thresholds in Section D1-04.1 shall prepare a Stormwater Site Plan for review. Stormwater Site Plans shall use site-appropriate development principles, as required and encouraged City of Bellevue Codes, to retain native vegetation and minimize impervious surfaces to the extent feasible. Stormwater Site Plans shall be prepared in accordance with Chapter D2.

D1-04.2(b) Minimum Requirement #2 - Construction Stormwater Pollution Prevention (SWPP)

All new development and redevelopment projects are responsible for preventing erosion and discharge of sediment and other pollutants into receiving waters. The objective of

DRAFT

Construction SWPP is to control erosion and prevent sediment and other pollutants from leaving the site during the construction phase of a project and to have fully functional stormwater facilities and BMPs for the developed site upon completion of construction.

Projects which result in 2,000 square feet or more of new plus replaced hard surface area, or which disturb 7,000 square feet or more of land must prepare a Construction SWPP Plan (SWPPP) as part of the Stormwater Site Plan.

Projects that result in less than 2,000 square feet of new plus replaced hard surface area, or disturb less than 7,000 square feet of land are not required to prepare a Construction SWPPP, but must consider all of the 13 Elements of Construction Stormwater Pollution Prevention. Refer to BCC 23.76 – Clearing and Grading Code for detailed requirements. Submittal of the SWPPP shall be made under the Clearing and Grading permit.

D1-04.2(c) Minimum Requirement #3 - Source Control of Pollution

All known, available and reasonable Source Control BMPs shall be applied to all projects. Source Control BMPs shall be selected, designed, and maintained according to the DOE Manual.

Source Control BMPs include Operational BMPs and Structural Source Control BMPs. Refer to Volume IV of the DOE Manual for Source Control BMP design details and Volume II, Chapter 4 of the DOE Manual for Source Control BMP construction sites.

Structural Source Control BMPs shall be identified in the stormwater site plan and shall be shown on all applicable plans submitted for permit review and approval.

D1-04.2(d) Minimum Requirement #4 - Preservation of Natural Drainage Systems and Outfalls

Natural drainage patterns shall be maintained, and discharges from the project site shall occur at the natural location, to the maximum extent practicable. The manner by which runoff is discharged from the project site must not cause a significant adverse impact to downstream receiving waters and downgradient properties. All outfalls require energy dissipation.

Creating new drainage patterns results in more site disturbance and more potential for erosion and sedimentation during and after construction. Creating new discharge points can create significant stream channel erosion problems as the receiving water body typically must adjust to the new flows. Diversions can cause greater impacts than would otherwise occur by discharging runoff at the natural location.

Where no conveyance system exists at the adjacent downgradient property line and the discharge was previously unconcentrated flow or significantly lower concentrated flow, then measures must be taken to prevent downgradient impacts. Drainage easements from downstream property owners may be needed and should be obtained prior to approval of engineering plans.

Chapter D4 provides detailed design requirements for conveyance facilities and outfall systems to protect against adverse impacts from concentrated stormwater runoff. Chapter D4 also provides standards for off-site analyses, including when a downstream analysis is required, the level of analysis that must be performed, and documentation requirements.

DRAFT

D1-04.2(e) Minimum Requirement #5 - On-site Stormwater Management

Projects shall employ On-site Stormwater Management BMPs in accordance with the following projects thresholds, standards, and lists to infiltrate, disperse, and retain stormwater runoff on-site to the extent feasible without causing flooding or erosion impacts.

Project Thresholds

Different compliance paths for meeting Minimum Requirement #5 are available depending on whether the project triggers all nine minimum requirements or whether the project triggers Minimum Requirements #1-5 only. Projects that trigger Minimum Requirements #1-5 only shall either:

- Use On-site Stormwater Management BMPs from List #1 (see List #1 provided below) for all surfaces within each type of surface in List #1; or
- Demonstrate compliance with the LID Performance Standard (described below). Projects selecting this option cannot use Rain Gardens. They may choose to use Bioretention BMPs as described in Chapter D5 of this manual and Chapter 7 of Volume V of the DOE Manual to achieve the LID Performance Standard.

Projects for which all nine minimum requirements apply shall either:

- Demonstrate compliance with the Performance Standard and BMP T5.13; OR
- Use On-site Stormwater Management BMPs from List #2 (see List #2 provided below) for all surfaces within each type of surface in List #2.

LID Performance Standard

Stormwater discharges shall match developed discharge durations to pre-developed durations for the range of pre-developed discharge rates from 8% of the 2-year peak flow to 50% of the 2-year peak flow. Refer to the "Standard Flow Control Requirement" section in Minimum Requirement #7 (D1-04.2(g)) for information about the assignment of the pre-developed condition. Project sites that must also meet Minimum Requirement #7 must match flow durations between 8% of the 2-year flow through the full 50-year flow.

List #1: On-site Stormwater Management BMPs for Projects Triggering Minimum Requirements #1 through #5

Feasibility shall be determined by evaluation against:

1. Design criteria, limitations, and infeasibility criteria identified for each BMP in Chapter D5 and Appendices D2, D9, and D10 of these Standards; and
2. Competing Needs Criteria listed in Chapter 5 of Volume V of the DOE Manual.

For lawn and landscaped areas, roofs, and other hard surfaces, consider the BMPs in the order listed below for that type of surface. Use the first BMP that is considered feasible for each surface. No other On-site Stormwater Management BMP is necessary for that surface.

DRAFT

Lawn and landscaped areas:

1. Post-Construction Soil Quality and Depth in accordance with Chapter D5 of this manual and BMP T5.13 in Chapter 5 of Volume V of the DOE Manual.

Roofs:

1. Full Dispersion in accordance with Chapter D5 of this manual and BMP T5.30 in Chapter 5 of Volume V of the DOE Manual, or Downspout Full Infiltration Systems in accordance with Chapter D5 of this manual and BMP T5.10A in Section 3.1.1 in Chapter 3 of Volume III of the DOE Manual.
2. Rain Gardens in accordance with Chapter D5 of this manual and BMP T5.14A in Chapter 5 of Volume V of the DOE Manual, or Bioretention in accordance with Chapter D5 of this manual and Chapter 7 of Volume V of the DOE Manual. The rain garden or bioretention facility must have a minimum horizontal projected surface area below the overflow which is at least 5% of the area draining to it.
3. Downspout Dispersion Systems in accordance with Chapter D5 of this manual and BMP T5.10B in Section 3.1.2 in Chapter 3 of Volume III of the DOE Manual.
4. Perforated Stub-out Connections in accordance with Chapter D5 of this manual and BMP T5.10C in Section 3.1.3 in Chapter 3 of Volume III of the DOE Manual.

Other Hard Surfaces:

1. Full Dispersion in accordance with Chapter D5 of this manual and BMP T5.30 in Chapter 5 of Volume V of the DOE Manual.
2. Permeable pavement[1] in accordance with Chapter D5 of this manual and BMP T5.15 in Chapter 5 of Volume V of the DOE Manual, or Rain Gardens in accordance with Chapter D5 of this manual and BMP T5.14 in Chapter 5 of Volume V of the DOE Manual, or Bioretention in accordance with Chapter D5 of this manual and Chapter 7 of Volume V of the DOE Manual. The rain garden or bioretention facility must have a minimum horizontal projected surface area below the overflow which is at least 5% of the area draining to it.
3. Sheet Flow Dispersion in accordance with Chapter D5 of this manual and BMP T5.12, or Concentrated Flow Dispersion in accordance with Chapter D5 of this manual and BMP T5.11 in Chapter 5 of Volume V of the DOE Manual.

List #2: On-site Stormwater Management BMPs for Projects Triggering Minimum Requirements #1 through #9

For each surface (lawn and landscaped areas, roofs, and other hard surfaces), consider the BMPs in the order listed for that type of surface. Use the first BMP that is considered feasible. No other On-site Stormwater Management BMP is necessary for that surface. Feasibility shall be determined by evaluation against:

1. Design criteria, limitations, and infeasibility criteria identified for each BMP in

[1] This is not a requirement to pave these surfaces. Where pavement is proposed, it must be permeable to the extent feasible unless full dispersion is employed.

DRAFT

Chapter D5 of this manual; and

2. Competing Needs Criteria listed in Chapter 5 of Volume V of the DOE Manual.

Lawn and landscaped areas:

1. Post-Construction Soil Quality and Depth in accordance with Chapter D5 of this manual and BMP T5.13 in Chapter 5 of Volume V of the DOE Manual.

Roofs:

1. Full Dispersion in accordance with Chapter D5 of this manual and BMP T5.30 in Chapter 5 of Volume V of the DOE Manual, or Downspout Full Infiltration Systems in accordance with Chapter D5 of this manual and BMP T5.10A in Section 3.1.1 in Chapter 3 of Volume III of the DOE Manual.
2. Bioretention (See Chapter D5 of this manual and Chapter 7 of Volume V of the DOE Manual) facilities that have a minimum horizontally projected surface area below the overflow which is at least 5% of the total surface area draining to it.
3. Downspout Dispersion Systems in accordance with Chapter D5 of this manual and BMP T5.10B in Section 3.1.2 in Chapter 3 of Volume III of the DOE Manual.
4. Perforated Stub-out Connections in accordance with Chapter D5 of this manual and BMP T5.10C in Section 3.1.3 in Chapter 3 of Volume III of the DOE Manual.

Other Hard Surfaces:

1. Full Dispersion in accordance with Chapter D5 of this manual and BMP T5.30 in Chapter 5 of Volume V of the DOE Manual.
2. Permeable pavement in accordance with Chapter D5 of this manual and BMP T5.15 in chapter 5 of Volume V of the DOE Manual.
3. Bioretention BMPs (See Chapter D5 of this manual and Chapter 7, Volume V of the DOE Manual) that have a minimum horizontally projected surface area below the overflow which is at least 5% of the total surface area draining to it.
4. Sheet Flow Dispersion in accordance with Chapter D5 of this manual and BMP T5.12, or Concentrated Flow Dispersion in accordance with Chapter D5 of this manual and BMP T5.11 in Chapter 5 of Volume V of the DOE Manual.

Exemptions

Projects qualifying as flow control exempt in accordance with D1-04.2(g) below must implement the following BMPs:

- Post-Construction Soil Quality and Depth (BMP T5.13, DOE Manual, Volume V, Chapter 5);
- Downspout Full Infiltration Systems (BMP T5.10A), Downspout Dispersion Systems (BMP T5.10B), or Perforated Stub-out Connections (BMP T5.10C) (DOE Manual – Volume III, Chapter 3), if feasible; and
- Concentrated Flow Dispersion (BMP T5.11) or Sheet Flow Dispersion (BMP

DRAFT

T5.12) (DOE Manual – Volume V, Chapter 5), if feasible.

Qualifying exempt projects do not have to achieve the LID performance standard, nor consider bioretention, rain gardens, permeable pavement, or full dispersion.

DRAFT

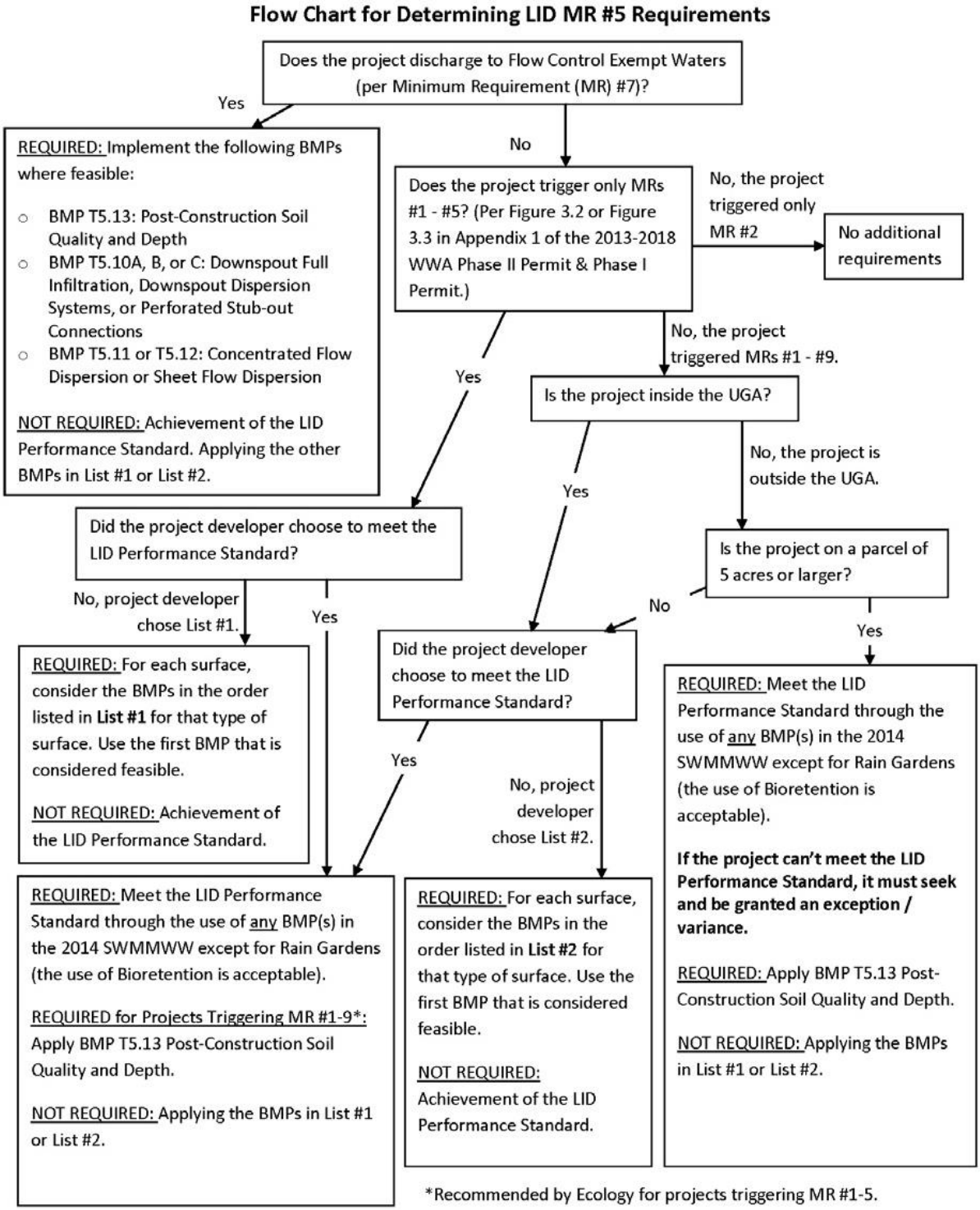

Figure 1.6 – Flow Chart for Determining LID Requirements for Minimum Requirement (MR) #5 – On-site Stormwater Management

Source: From Figure 2.5.1 in Volume I, DOE Manual.

D1-04.2(f) Minimum Requirement #6 - Runoff Treatment

Thresholds

When assessing a project against the following thresholds, only consider those hard and pervious surfaces that are subject to this minimum requirement as determined in Section D1-04.1 of this chapter.

The following require construction of stormwater treatment facilities:

- Projects in which the total of, PGHS is 5,000 square feet or more, or;
- Projects in which the total of PGPS – not including permeable pavements – is 3/4 of an acre or more, and from which there will be a surface discharge in a natural or man-made conveyance system from the site.

Treatment Facility Sizing

Size stormwater treatment facilities for the entire area that drains to them, even if some of those areas are not pollution-generating, or were not included in the project site threshold decisions (Section D1-04.1 of this chapter) or the treatment threshold decisions of this minimum requirement.

Water Quality Design Storm Volume:

When using an approved continuous runoff model, the water quality design storm volume shall be equal to the simulated daily volume that represents the upper limit of the range of daily volumes that accounts for 91% of the entire runoff volume over a multi-decade period of record.

Water Quality Design Flow Rate:

- **Preceding Detention Facilities or when Detention Facilities are not required:** The flow rate at or below which 91% of the runoff volume, as estimated by an approved continuous runoff model, will be treated. Design criteria for treatment facilities are assigned to achieve the applicable performance goal (e.g., 80% TSS removal) at the water quality design flow rate. At a minimum, 91% of the total runoff volume, as estimated by an approved continuous runoff model, must pass through the treatment facility(ies) at or below the approved hydraulic loading rate for the facility(ies).
- **Downstream of Detention Facilities:** The water quality design flow rate must be the full 2-year release rate from the detention facility.

Treatment Facility Selection, Design, and Maintenance

Stormwater treatment facilities shall be:

- Selected in accordance with the process identified in Chapter 2 of Volume V of the DOE Manual.
- Designed and maintained in accordance with the design criteria in Volume V of the DOE Manual.

DRAFT

Additional Requirements

Direct discharge of untreated stormwater from pollution-generating hard surfaces to ground water is prohibited, except for the discharge achieved by infiltration or dispersion of runoff through use of On-site Stormwater Management BMPs, in accordance with Chapter D5 of this manual and Chapter 5, Volume V and Chapter 7, Volume V of the DOE Manual; or by infiltration through soils meeting the soil suitability criteria in Chapter 3 of Volume III of the DOE Manual.

Oil control treatment is required for high-use sites, or those sites that typically generate high concentrations of oil due to high traffic turnover or the frequent transfer of oil. All stormwater from hard surfaces subject to motor vehicle traffic shall flow through a spill-containment type oil/water separator prior to surface discharge off-site.

There are several levels of runoff treatment, depending on the type of land use activities. Volume V of the DOE Manual includes performance goals for Basic, Enhanced, Phosphorus, and Oil Control treatment, and a menu of facility options for each treatment type. Treatment facilities that are selected from the appropriate menu and designed in accordance with their design criteria are presumed to meet the applicable performance goals.

Stormwater runoff from all project areas tributary to Larsen Lake, Phantom Lake, and Lake Sammamish shall require Phosphorus Treatment, except areas that typically do not generate pollutants. Surfaces that typically do not generate pollutants include roof areas (except uncoated metal roofs) and sidewalks. Such runoff need not be treated and may bypass the Phosphorus Treatment BMP, if feasible.

An adopted and implemented basin plan or a TMDL (also known as a Water Clean-up Plan) may be used to develop runoff treatment requirements that are tailored to a specific basin. However, treatment requirements shall not be less than that achieved by facilities in the Basic Treatment Menu. See Volume V, Chapter 3 of the DOE Manual.

Treatment facilities applied consistent with this standard are presumed to meet the requirement of state law to provide all known available and reasonable methods of treatment (RCW 90.52.040, RCW 90.48.010). This technology-based treatment requirement does not excuse any discharge from the obligation to apply whatever technology is necessary to comply with state water quality standards, Chapter 173-201A WAC; state ground water quality standards, Chapter 173-200 WAC; state sediment management standards, Chapter 173-204 WAC; and the underground injection control program, Chapter 173-218 WAC. Additional treatment to meet those standards may be required.

Infiltration through use of On-site Stormwater Management BMPs can provide both treatment of stormwater, through the ability of certain soils to remove pollutants, and volume control of stormwater, by decreasing the amount of water that runs off to surface water. Infiltration through engineered treatment facilities that utilize the natural soil profile can also be very effective at treating stormwater runoff, but pretreatment must be applied and soil conditions must be appropriate to achieve effective treatment while not impacting ground water resources. See Chapter D5 of this manual and Chapter 6 of Volume V of the DOE Manual for pretreatment design details.

DRAFT

Discharge of pollution-generating surfaces into a dry well, after pretreatment for solids reduction, can be acceptable if the soil conditions provide sufficient treatment capacity. Dry wells into gravelly soils are not likely to have sufficient treatment capability. They must be preceded by at least a Basic Treatment BMP. See Chapter D5 of this manual and Volume V, Chapters 2 and 7 of the DOE Manual for details.

Impervious surfaces that are "fully dispersed" in accordance with BMP T5.30 in Volume V of the DOE Manual are not considered effective impervious surfaces. Impervious surfaces that are "dispersed" in accordance with BMPs T5.10B, T5.11, and T5.12 in Section 5.3.1 of Volume V of the DOE Manual are still considered effective surfaces though they may be modeled as pervious surfaces if flow path lengths meet the specified minima. See Volume III, Appendix III-C of the DOE Manual for a more complete description of hydrologic representation of On-site Stormwater Management BMPs.

D1-04.2(g) Minimum Requirement #7 - Flow Control

Projects must provide flow control to reduce the impacts of stormwater runoff from hard surfaces and land cover conversions. The standard flow control requirements below apply to projects that discharge stormwater directly, or indirectly through a conveyance system, into a fresh waterbody.

In accordance with BCC 24.06, flow control is not required for properties within the Meydenbauer Drainage Basin to the extent provided for in Ordinance No. 3372.

If the discharge is to a stream that leads to a wetland, or to a wetland that has an outflow to a stream, both this requirement and Minimum Requirement #8 – Wetlands Protection apply.

Exemptions

As specified in BCC 24.06.065 (G)(7), flow control is not required for projects that discharge directly to Lake Washington, Lake Sammamish, or Mercer Slough via a conveyance system meeting the requirements set forth in these Standards. The direct discharge to these water bodies is subject to the following restrictions:

1) Direct discharge to the exempt receiving water does not result in the diversion of drainage from any perennial stream classified as Types 1, 2, 3, or 4 in the State of Washington Interim Water Typing System, or Types "S," "F," or "Np" in the Permanent Water Typing System, or from any category I, II, or III wetland; and
2) Flow splitting devices or drainage BMPs are applied to route natural runoff volumes from the project site to any downstream Type 5 stream or category IV wetland:
    - Design of flow splitting devices or drainage BMPs will be based on continuous hydrologic modeling analysis. The design will assure that flows delivered to Type 5 stream reaches will approximate, but in no case exceed, durations ranging from 50% of the 2-year to the 50-year peak flow.
    - Flow splitting devices or drainage BMPs that deliver flow to category IV wetlands will also be designed using continuous hydrologic modeling to preserve pre-project wetland hydrologic conditions unless specifically waived

DRAFT

or exempted by regulatory agencies with permitting jurisdiction; and

- The project site must be drained by a conveyance system that is comprised entirely of manmade conveyance elements (e.g., pipes, ditches, outfall protection) and extends to the ordinary high water line of the exempt receiving water; and
- The conveyance system between the project site and the exempt receiving water shall have sufficient hydraulic capacity to convey discharges 100-year, 24 hours peak discharge from future build-out conditions (under current zoning) of the site and the existing condition from non-project areas from which runoff is or will be collected; and
- Any erodible elements of the manmade conveyance system must be adequately stabilized to prevent erosion under the conditions noted above.

3) The invert elevation of any pipe outfall to Mercer Slough shall match the winter pool elevation of Lake Washington, which is 16.7 feet NAVD88. Lake Washington and Mercer Slough have equivalent water surface elevations.

Removal of pavement to subgrade and subsequent replacement (not including spot base repairs) is considered to be complete reconstruction which qualifies as redevelopment and disturbance. Such reconstruction is not considered to be routine maintenance, and therefore, is not exempt.

Flow control is not required for properties within the Meydenbauer Drainage Basin to the extent provided for in Ordinance Number 3372 (BCC 24.06.065G7b(b)).

Flow control is not required for site areas which are or will be set aside in Native Growth Protection Areas and Easements (NGPAs/NGPEs) provided such NGPAs/NGPEs are in separate tracts, or in easements which are permanently fenced or permanently signed when included as part of the lot or the developed parcel. Flow control system design shall assume that all other pervious areas will be landscaped as part of or following development.

Thresholds

The following projects require achievement of the standard flow control requirement:

- Projects in which the total of effective impervious surfaces is 10,000 square feet or more in a threshold discharge area, or
- Projects that convert ¾ acres or more of vegetation to lawn or landscape, or convert 2.5 acres or more of native vegetation to pasture in a threshold discharge area, and from which there is a surface discharge in a natural or man-made conveyance system from the site, or
- Projects that through a combination of effective hard surfaces and converted vegetation areas cause a 0.10 cubic feet per second increase in the 100-year flow frequency from a threshold discharge area as estimated using the Western Washington Hydrology Model (WWHM) or other approved model and one-hour

DRAFT

time steps (or a 0.15 cfs increase using 15-minute time steps).[2]

When assessing a project against the above thresholds, consider only those surfaces that are subject to this minimum requirement as determined in Section D1-04.1 of this chapter.

Standard Flow Control Requirements

Stormwater discharges shall match developed discharge durations to pre-developed durations for the range of pre-developed discharge rates from 50% of the 2-year peak flow up to the full 50-year peak flow. The pre-developed condition to be matched shall be a forested land cover unless reasonable, historic information is provided that indicates the site was prairie prior to settlement (modeled as "pasture" in WWHM).

For projects located in the Sturtevant Creek basin, which has been approved by Ecology as having had at least 40% total impervious surface areas since 1985, the pre-developed condition to be matched shall be the "historic" land cover condition, or a land cover condition commensurate with achieving a target flow regime identified by an approved basin study.

Flow Control BMPs shall be selected, designed, and maintained according to Chapter D5 of this manual.

D1-04.2(h) Minimum Requirement #8 - Wetlands Protection

Wetlands are extremely important natural resources which provide multiple stormwater benefits, including ground water recharge, flood control, and stream channel erosion protection. They are easily impacted by development unless careful planning and management are conducted. Wetlands can be severely degraded by stormwater discharges from urban development due to pollutants in the runoff and also due to disruption of natural hydrologic functioning of the wetland system. Changes in water levels and the frequency and duration of inundations are of particular concern.

Applicability

The requirements below apply only to projects whose stormwater discharges into a wetland, either directly or indirectly through a conveyance system.

Thresholds

The thresholds identified in Minimum Requirement #6 - Runoff Treatment and Minimum Requirement #7 - Flow Control shall also be applied to determine the applicability of this requirement to discharges to wetlands.

Standard Requirement

Projects shall comply with Guide Sheets #1 through #3 in Volume I, Appendix 1-D of the DOE Manual. The hydrologic analysis shall use the existing land cover condition to determine the existing hydrologic conditions unless directed otherwise by the City.

[2] For the purpose of applying this threshold, the existing condition is either the pre-project land cover, (for a developed site with an approved stormwater mitigation plan) or the land cover that existed at the site as of a date when the City first adopted flow control requirements into code or rules (December 1975).

DRAFT

Additional Requirements

Stormwater treatment and flow control facilities shall not be built within a natural vegetated buffer, except for:

- Necessary conveyance systems as approved by the City; or

As allowed in wetlands approved for hydrologic modification and/or treatment in accordance with Guide Sheet 2 in Appendix 1-D of Volume I of the DOE Manual.Volume I, Appendix 1-D of the DOE Manual *Guidelines for Wetlands When Managing Stormwater* shall be used for discharges to natural wetlands and wetlands constructed as mitigation. While it is always necessary to pre-treat stormwater prior to discharge to a wetland, there are limited circumstances where wetlands may be used for additional treatment and detention of stormwater. These situations are considered in Guide Sheet 2 of Appendix 1-D of the DOE Manual.

Note that if selective runoff bypass is an alternative being considered to maintain the hydroperiod, the hydrologic analysis shall consider the impacts of the bypassed flow. For instance, if the bypassed flow is eventually directed to a stream, the flow duration standard, Minimum Requirement #7 – Flow Control, applies to the bypass.

D1-04.2(i) Minimum Requirement #9: Operation and Maintenance

An operation and maintenance manual that is consistent with the provisions in Chapter D2 shall be provided for proposed stormwater facilities and BMPs, and the party (or parties) responsible for maintenance and operation shall be identified. At private facilities, a copy of the operation and maintenance manual shall be retained on-site or within reasonable access to the site, and shall be transferred with the property to the new owner. For public facilities, a copy of the operation and maintenance manual shall be retained in the appropriate department. A log of maintenance activity that indicates what actions were taken shall be kept and be available for inspection by the City.

Dl-05 GOVERNMENTAL AGENCY REQUIREMENTS

All construction on City, County or State roads or right-of-way shall be done in accordance with that agency's standards and requirements and in accordance with all franchise and/or permit requirements. The Contractor is responsible to determine these requirements prior to construction.

Where conflict exists between these Standards and permit requirements, the most stringent permit requirements shall take precedence.

DRAFT

END OF CHAPTER D1

DRAFT

CHAPTER D2 – PLAN AND REPORT SUBMITTAL

TABLE OF CONTENTS

Not included in draft document.

DRAFT

CHAPTER D2 – PLAN AND REPORT SUBMITTAL

D2-01 GENERAL

Following these standards to design the stormwater system will help ensure a timely review of the proposed project and keep review costs to a minimum.

A drainage system which includes unreasonable and intensive maintenance or operational requirements as determined by the City shall be rejected in favor of a drainage system which does not place undue burdens on the owner/operators of such system.

D2-02 ADJUSTMENTS AND DEVIATIONS

D2-02.1 General

The applicant may propose an Adjustment to the minimum requirements described in BCC 24.06.065.D, or a Deviation from the Storm and Surface Water Engineering Standards. Proposed Adjustments or Deviations must be project specific. An Adjustment or Deviation may take longer to review, resulting in increased processing costs. The Applicant acknowledges these risks when submitting a request for an Adjustment or Deviation.

D2-02.2 Adjustment and Deviation Criteria

The City's decisions to grant, deny, or modify proposed Adjustments or Deviations shall be based on evidence that the request meets the following criteria:

1) Adjustment Criteria:
   a) The Adjustment provides substantially equivalent environmental protection; and
   b) The Adjustment is based on sound engineering practices; and
   c) The Adjustment meets the objectives of safety, function, environmental protection and facility maintenance.
2) Deviation Criteria
   a) The Deviation will achieve the intended result through a comparable or superior design; and
   b) The Deviation provides substantially equivalent environmental protection; and
   c) The Deviation is based on sound engineering practices; and
   d) The Deviation meets the objectives of safety, function, environmental protection, and facility maintenance.

D2-02.3 Adjustment and Deviation Process

Requests for Adjustments or Deviations shall be:

1) Provided to the Utilities Reviewer in writing prior to implementation; and
2) Demonstrate how the proposed Adjustment or Deviation meets criteria listed or referenced above (e.g. written finding of fact); and

DRAFT

3) May be reviewed by the Utilities Technical Team before a decision is made; and
4) The decision by the City shall be final.

Any approved Adjustments or Deviations shall be included with the final approved drainage plan.

D2-03 EXCEPTIONS OR VARIANCES

A request for an Exception or Variance to the minimum requirements may be submitted with a permit or approval listed in LUC 20.35.015 (C) or, if none of the listed permits or approvals apply to the project or if a decision is necessary to finalize the site layout, the applicant may submit a request for an Exception with submittal of a Predevelopment Services application. The Director may approve a request for an exception provided the applicant can demonstrate compliance with the criteria contained in BCC 24.06.065(C).

D2-04 ERRORS AND OMISSIONS

Any errors or omissions in the approved plans or information used as a basis for such approvals may constitute grounds for withdrawal of any approvals and/or stoppage of any or all of the permitted work, as determined by the City. It shall be the responsibility of the Developer to show cause why such work should continue, and make such changes in plans that may be required by the City before the plans are approved.

D2-05 SUBMITTAL REQUIREMENTS

Table 2.1 summarizes the plans and reports that must be submitted for City review during the Site Assessment and Planning Review, Preliminary Design Review, and Final Design Review stages. For each stage, the submittal requirements vary based on whether the project triggers Minimum Requirements #1 - #5 only or whether the project triggers all nine minimum requirements. See Section D2-06 for detailed document contents and format required for each type of drainage review.

DRAFT

Table 2.1 – Summary of Submittal Requirements for Each Review Stage for Projects that Trigger MR #1-5 Only and Projects that Trigger MR #1-9

Submittal Documents	MR #1 -5 Only	MR #1 - 9
Site Assessment and Planning Review		
Application Forms [a]	✓	✓
Site Assessment and Planning Packet	✓	✓
Preliminary Design Review (60-percent design, or higher)		
Site Plans	✓	✓
Storm Drainage Report	Limited [d]	✓
Geotechnical/Hydrogeological Reports	Limited [e]	✓
Other Reports (as applicable) [b]	✓	✓
Final Design Review (90-percent design)		
Site Plans	✓	✓
Construction Stormwater Pollution Prevention Plan (Construction SWPPP) [c]	✓	✓
Storm Drainage Report	Limited [d]	✓
Geotechnical/Hydrogeological Reports	Limited [e]	✓
Other Reports (as applicable) [b]	✓	✓

Notes:

MR = Minimum Requirement.

a. For specific application requirements, refer to BCC 24.06.060.

b. Refer to Section D1-01 for discussion of possible drainage requirements by other agencies or drainage requirements beyond the minimum requirements that may pertain to the project.

c. The Construction SWPPP is issued through the clearing and grading permit.

d. Storm Drainage Reports for projects that trigger MR #1-5 only may omit hydrologic/hydraulic analysis for On-Site Stormwater Management BMP sizing, unless otherwise directed. Refer to Section D2-06.4 for detailed Storm Drainage Report requirements.

e. Projects that trigger MR #1-5 only may require fewer infiltration tests by a licensed professional (per D2-06.5) than required for projects that trigger MR #1-9, depending on the BMPs selected. Post-construction soil quality and depth, rain gardens, certain types of full downspout infiltration do not require infiltration testing by a licensed professional, while projects that trigger MR #1-5 only that use bioretention and/or permeable pavement or certain tpes of full downsout ubfiltration require fewer infiltration tests than projects that trigger MR #1-9. Refer to infiltration testing requirements in D5-03.2 for details.

DRAFT

D2-06 SUBMITTAL DOCUMENTS

D2-06.1 Site Assessment and Planning Packet

The Site Assessment and Planning Packet shall demonstrate the methods, sources of information used, and the results of site assessment and planning analyses as described in Section D1. The packet is organized into the following sections:

A. Applicant Information – Includes basic project applicant information.
B. Project Information – Includes basic project summary information.
C. Existing Site Composite Map – Combines the information analyzed in the inventory and analysis into a composite site map that is used as the basis for site design.
D. Existing Site Inventory and Analysis Checklist – Documents findings from the site inventory and analysis.
E. Existing and Proposed Site Land Cover Areas – Summarizes existing and proposed site land cover areas. This summary information helps demonstrate compliance with the requirement to minimize impervious area, loss of vegetation, and stormwater runoff.
F. Potential LID BMP Matrix - Documents LID BMP infeasibility evaluation and provides justification for why individual LID BMPs were included or not included in site plans.

Refer to Appendix D-2 for a copy of the packet.

D2-06.2 Site Plans

Site plan submittal standards vary by size and type of project. Refer to handouts provided by City of Bellevue Development Services for Submittal Requirements.

Utility plans submitted for review shall meet the City's "Boundary & Topographic Survey" and "Site Plan B" requirements. Current copies of these requirements are available at the Bellevue Development Services Center and the City's website, http://www.bellevuewa.gov/numbered_description_sheets.htm.

Water, sanitary sewer and storm drainage designs (complete plan and profile) shall be on separate plan sheets, although alignments of all Utilities shall be shown on each utility plan. Plan sets for all three Utilities can be combined for small projects if information is readable. Designs for water and sewer can be combined on the same plan sheets if plan scale is 1"=10', V=20', or 1'"=30'. Contact the Utility representative in the Permit Center for approval to combine plans.

D2-06.2(a) Required Content

Site plans shall include:

DRAFT

1) Title Block - Border and title block shall conform to standard City of Bellevue format. Include Section – Township – Range and project site address in the lower right hand corner of the title block. See Appendix D-3.
2) Project Name Utility Extension (UE) Permit Number – Provide if applicable.
3) Engineering Plans - Plan, profile and detail sheet(s) for the proposed drainage system.
    a. Plan View:
        i. List pipe length, size and material alongside of pipe, e.g. 150 L.F. - 8" PVC. Pipe material can be listed in a general note in lieu of listing along pipe.
        ii. Pipe length is to be based on horizontal distance between center of manholes.
        iii. Indicate direction of flow with arrows on end of pipe entering manhole.
    b. Profile View
        i. List pipe length, size, material and slope to 4 decimal places (ft per ft), e.g. 150 L.F. - 8" PVC S=0.0125. Pipe material can be listed in a plan note in lieu of listing on profile.
        ii. Slope is based on invert elevation OUT of upstream manhole, invert elevation INTO downstream manhole and horizontal distance between center of manholes.
4) Site Areas – Include total project site area and site area by TDA; existing impervious and other hard surface types; existing vegetated areas; proposed pervious and impervious and hard areas, areas within Native Growth Protection Easements (NGPE), etc., on the drainage plan sheet(s).
5) Hydrologic and Hydraulic Data – Tabulate design volumes and allowable release/ discharge rates for flow control and runoff treatment facilities on the plans and in the Storm Drainage Report, including in the body of the report with the design and calculations discussion, and in the O&M appendix of the report. The drainage plans shall provide space for as-built volume and release rates.
6) Scale - Be consistent and indicate your scale on each sheet using a bar symbol (for Plan reproduction integrity). Drawings are to be in a scale of 1” = 10', 1” = 20’ or 1” = 30’ for combined utility plans. Drawings at 1” = 40’ or 1” = 50’ scale shall show utility plans on separate sheets. Architectural scales for utility drawings will not be accepted. If the scale results in more than three pages of plan sheets, a cover sheet showing the entire project site (at a smaller scale) shall be provided.
7) North Arrow - Include on all plan view drawings. North arrow shall face up and/or to the right hand side of plan sheet.
8) Datum - Show both horizontal (NAD-83) (NSRS 2011) and vertical (NAVD 88) control points. Specify the benchmark to be used for vertical control during

DRAFT

construction. For sites with FEMA-mapped floodplains, label the 100-year floodplain elevation with the NGVD29 and NAVD88 values.

9) Site Survey - The site survey, for both design and as-builting, shall be accurately referenced to the Washington State Plane Coordinate System (NAD-83) (NSRS 2011) by field ties to at least two City of Bellevue survey control network monuments. All elevations shall be referenced to the North American Vertical Datum of 1988 (NAVD 88). Information on the City of Bellevue survey control network is available by contacting the Transportation Department, Property Services Division, at (425) 452-6019.
10) Vicinity Map - Include on the plan for each utility. The vicinity map covers the project site and surrounding streets and property within a minimum of 600' of the site. Copies of a city map can be made from the Street Atlas in the Self Help area of the Permit Center.
11) Notes – Refer to Appendix D-4 for a listing of standard notes that shall be incorporated in the drainage plan set. All the notes on the list may not pertain to every project. The Developer may omit non-relevant notes as determined by the Utility. However, do not renumber the remaining notes. If additional notes are needed for specific aspects, they should be added after the standard notes

D2-06.2(b) Required Plan Format and Production Standards

Plan submittals shall conform to Development Services "Standards for Plans and Drawings", including the following:

1) Line types – Use line types that clearly distinguish existing utilities from new; new facilities and call-outs for new facilities should be a heavier line type.
2) Drafting Media - Plans sheets shall be plotted on 24" x 36" or 22" x 34" paper.
3) Drafting Standards - Plotting shall be on paper with a non-smudging, ink or ink-like media. Pencil drawings (including corrections or alterations) shall not be accepted.
4) Drafting standards/symbols - Conform to Washington State APWA Chapter CAD Standards. See Appendix D-5 Lettering shall be done with "Leroy-style" font (SIMPLEX font if using AutoCAD).
5) Text Height:
    a. Text identifying existing features shall be 0.08" in height (Leroy 80 template).
    b. Text identifying street names shall be 0.24" in height (Leroy 240 template).
    c. Text for instructions and call outs for proposed facilities shall be 0. 12" in height (Leroy 120 template).
6) Stationing - On plans with more than one sheet, stationing shall proceed from left to right or from bottom to top.
7) As-builts - Upon completion of construction, as-builts shall be provided in digital format for as-builting and permanent record. The digital format shall be in AutoCAD

DRAFT

Version 2004 through 2011 (no older or newer). The "DWG" file(s) on a CD ROM. The AutoCAD files shall include all plans, profiles, notes, and details of the surface water improvements.

8) Copies of Plans - Blueline or blackline prints and photocopies are acceptable. Brownline prints and microfilm copies of plans will not be accepted.
9) Type of Paper for Plan Copies - Blueprint quality or standard drafting paper. Tissue paper, graph paper, poster board, cardboard, and similar materials will not be accepted.

D2-06.3 Construction Stormwater Pollution Prevention Plan

Refer to BCC 23.76 – Clearing and Grading Code for Construction Stormwater Pollution Prevention Plan requirements. This plan will be approved under a clearing and grading permit.

D2-06.4 Storm Drainage Report

For projects that trigger Minimum Requirements #1 through #5 only and do not otherwise require an engineer, the Storm Drainage Report may be completed by a qualified professional. For projects that trigger Minimum Requirements #1 through #9 or otherwise require an engineer to design stormwater management facilities, the Storm Drainage Report shall be prepared by a Professional Engineer.

The Storm Drainage Report shall contain no pages larger than 11” x 17” and shall contain the following:

1) Cover Sheet – Include the project name; proponent’s name, address and telephone number; name of the Professional Engineer with stamp; and date of submittal.
2) Table of Contents – Show the page numbers for each section of the report and provide lists of tables, figures, and appendices, including page numbers for each.
3) Project Overview – Include the following information:
    a. Relevant project background information.
    b. Size and location of the project site, including address and tax parcel number of the property.
    c. Vicinity map.
    d. Project description, including proposed land uses, proposed site improvements, proposed construction of hard surfaces, proposed landscaping, proposed permanent stormwater management facilities, etc.
    e. Discussion of how LID techniques were utilized to minimize impervious surfaces, loss of vegetation, and stormwater runoff. Refer to the Site Assessment and Planning Packet, to be included as an appendix, and describe how findings during the site analysis and planning stage were incorporated into preliminary and final designs.

DRAFT

f. Summary of proposed conveyance, On-site Stormwater Management, Flow Control, and Water Quality Treatment BMPs.

g. List and description of the applicable design standards, documents, and requirements that were used as the basis for the drainage design, including but not limited to these standards, the DOE Manual, and the LID Technical Guidance Manual for Puget Sound.

h. References to relevant reports, such as basin plans, flood studies, groundwater studies, wetland designation, critical area designation, environmental impact statements, lake restoration plans, water quality reports, etc. Where such reports impose additional conditions on the project, those conditions shall be included in the drainage designs and documented in the Storm Drainage Report.

4) Existing Conditions – Include the following information:

a. Description of site topography, land cover, and land uses.

b. Existing Conditions Map, showing:

- Project site boundary.
- Flow path from site to receiving water (up to ¼ mile), and threshold discharge areas. Indicate the receiving water (lake or major stream).
- Existing structures.
- Existing access, including roads, driveways, and other points of ingress and egress within 100 feet of the site.
- Existing critical areas.
- Existing topography.
- Existing drainage facilities, drainage directions, and drainage conditions. Include existing pipes, structures, and BMPs, including their types, sizes, and materials.
- Existing hydrologic patterns and features, including streams, wetlands, seeps, springs, closed depressions, drainage swales and ditches, signs of erosion, and any other significant pattern or feature that affects site design. Include existing off-site drainage tributary to the project site.
- Areas of high seasonal groundwater per geotechnical report requirements.
- Existing trees and vegetation.
- Existing utilities.
- Existing drainage or erosion problems on-site.
- Existing drainage or erosion problems upstream or downstream of the project site which may impact the proposed site development and drainage designs.

DRAFT

- Each type of hard surface, lawn and landscape area. Tabulate the square footage of each based on the existing condition and include this table on the map.
- References for the source(s) of information used to develop the map.

c. Narrative Discussion of all mapped features on the Existing Conditions Map.

d. Tabulation of existing land cover types and acreages. Refer to Chapter D1-03 for additional information.

e. If during the course of design, the existing site conditions were found to vary from those documented in the Site Analysis and Planning Packet, discuss those variations and how they affect LID site design, including minimization of impervious surfaces, loss of vegetation, and runoff generation, as well as BMP selection, if applicable.

5) Proposed Conditions – Include the following information:

a. Description of proposed changes to site topography as a result of grading, land cover, and land use.

b. Proposed Conditions Map, showing:

- Project site boundary.
- Off-site contributing drainage basins.
- On-site drainage basin delineation.
- Proposed topography.
- Each type of hard surface, lawn and landscape area, and non-disturbance areas. Tabulate the square footage of each based on the proposed plan. Also tabulate the amount of new and replaced hard surface areas and converted vegetation areas within each threshold discharge area. Refer to Chapter D1-03 for details on how to tabulate areas.
- Permananent Stormwater Control Plan – Include the following:
  - Proposed conveyance, On-site Stormwater Management, Flow Control, and Water Quality Treatment BMPs.
  - Sufficient profiles and details needed for review, for the Contractor to construct the facilities, and for the constructed facilities to be verified by the City Inspector.
    - If a separate plan sheet is needed for clarity, use the submittal standards in Section D2-06.2.
    - If a Utility Developer Extension Agreement is required for water, sewer or storm drainage facilities, plans for the drainage facilities may be combined with water and sewer if they remain readable.
- Setbacks, as required by Land Use Code and Chapter D4 and Chapter D5.

DRAFT

- References for the source(s) of information used to develop the map.

c. Tabulation of proposed land cover types and acreages.
d. Potential stormwater quantity and quality impacts resulting from the proposed project.
e. Minimum requirements that pertain to the project.
f. Drainage-related requirements beyond the minimum requirements that pertain to the project.
g. Proposed permanent stormwater management plan to address the minimum requirements and other drainage-related requirements, including conveyance, On-site Stormwater Management, Flow Control, and Water Quality Treatment BMPs.

6) Infiltration Feasibility Assessment and Infiltration BMP Design – Provide a summary of the relevant information from the Geotechnical/Hydrogeological Report. The summary shall include:
   a. Summary of soil types, groundwater conditions, existing or potential erosion areas, and other information relevant to drainage designs.
   b. Discussion of methods, assumptions, and results for the infiltration feasibility assessment.
   c. Recommendations regarding infiltration feasibility and design of infiltration BMPs, including measured infiltration rates, correction factors, and recommended design infiltration rates.
   d. Map of infiltration test locations.
7) Off-site Capacity Analysis – Include a Level 1 Off-site Capacity Analysis prepared in accordance with Chapter D4. This Level 1 analysis, as well as the location of the project in a drainage basin, will be reviewed by the City to determine whether a Level 2 and/or Level 3 analysis will be required. Any further analysis of downstream conditions required by the Level 1 analysis shall become a part of the Storm Drainage Report.
8) Hydrologic/Hydraulic Analysis – For projects required to implement Minimum Requirement #1 through #9, these calculations shall bear the signature and stamp of the responsible Professional Engineer:
   a. Names and versions of modeling software programs used.
   b. Narrative, mathematical, and graphic presentations of model/calculation input parameters selected for the developed site condition, including acreage, soil types, and land covers, road layout, and all proposed drainage facilities.
   c. Developed basin areas, threshold discharge areas, and flows should be shown on a map and cross-referenced to computer printouts or calculation sheets. Developed basin flows should also be tabulated.
   d. Any documents used to determine the developed site hydrology should be included. Whenever possible, maintain the same basin name as used for the

DRAFT

pre-developed site hydrology. If the boundaries of a basin have been modified by the project, that should be clearly shown on a map and the name modified to indicate the change.

e. Drawing(s) of the conveyance and on-site stormwater management facilities and appurtenances. Show basic measurements necessary to calculate the storage volumes available from zero to the maximum head, all orifice/restrictor sizes and head relationships, control structure/restrictor placement, and placement on the site. All conveyance elements (i.e., pipes, culverts, catch basins, channels, swales, etc.) and BMPs must be clearly labeled and correspond directly to the engineering plans.

f. Computer printouts, calculations, equations, references, storage/volume/infiltration tables, graphs as necessary to show methodology used to determine model input parameters (i.e., footprint areas, side slopes, storage volumes, etc.).

g. Model/calculation results demonstrating that the applicable conveyance and on-site stormwater management requirements are met by the proposed designs. Where applicable, standard model output reports from approved models shall be provided, and shall be annotated as needed to demonstrate attainment of applicable standards. Refer to Section D3-02 for a list of approved models.

h. When required per Section D4-03, provide calculation methodologies, inputs, assumptions, and results for analysis of off-site conveyance capacity.

9) Appendices – Include the following appendices where applicable:

a. Completed Infiltration Feasibility Checklist.

b. Completed Site Analysis and LID Packet.

c. Geotechnical/Hydrogeologic Report.

d. Relevant sheets from the design drawing set (e.g., existing conditions, grading, paving, tree protection, drainage plans and profiles, etc.).

e. Model outputs and reports.

f. Site photographs, as appropriate.

g. Operation and Maintenance Manual (O & M Manual) for Stormwater Management Facilities per Section D2-08.

h. Other relevant reports which support or corroborate the assumptions, findings, or conclusions contained in the Storm Drainage Report.

i. As-Built drawings, stamped and signed by the Professional Engineer, per Section D2-07. Must be submitted following inspection, prior to occupancy, and approved by the City.

D2-06.5 Geotechnical/Soils Reports

DRAFT

The report of geotechnical/soil investigation shall be prepared by a licensed professional engineer with geotechnical expertise, or a licensed geologist, hydrogeologist, engineering geologist, registered in the State of Washington, in accordance with these Standards.

Geotechnical/Soils Reports are required to document subsurface investigations, groundwater monitoring, characterization of infiltration receptor, and groundwater mounding and seepage analyses, per Chapter D5. In addition, BCC 23.76.080 requires a geotechnical report whenever development is proposed in a geologically hazardous area or shoreline setback, or when Utilities determines that additional soils and slope analysis is appropriate on a particular site.

The following report types may be combined or provided separately, depending on who prepares the reports and approval by Utilities reviewers to combine reports. Where a licensed professional is required to prepare reports, the reports shall bear the signature and stamp of the licensed professional in the state of Washington.

The minimum information to be included in each report is detailed below:

1) Geotechnical analysis – Provide the following:
    - Potential impact of stormwater BMPs on slopes 15% or greater or otherwise sensitive slopes, per Chapter D5 of this manual.
    - For BMPs setback less than 50 feet from steep slopes, information necessary to support the proposed setback.
    - Information required per BCC 23.76.080.
    - Results and conclusions.
    - Raw data and calculations, to be included in an appendix.
2) Geotechnical Report for Infiltration Feasibility– For projects required to conduct infiltration feasibility assessment per Chapter D5, provide the following:
    - For all subsurface investigation and infiltration testing reports, provide the following:
        - Description of the methods used and the standards upon which the methods were based.
        - Maps of investigation and testing locations.
        - A description of local site geology, including soil or rock units likely to be encountered, the ground water regime, and geologic history of the site.
        - Discussion of soil and groundwater conditions found.
        - Results, including detailed logs for each subsurface exploration and infiltration test.
        - Depth to groundwater and to hydraulically-restrictive material.
        - Conclusions
        - Raw data, logs, and calculations, to be included in an appendix. Logs must include at a minimum, depth of pit or borehole, soil descriptions, depth to water, and presence of stratification. *(Note:* Logs must

DRAFT

substantiate whether stratification does or does not exist. The licensed professional may consider additional methods of analysis to substantiate the presence of stratification that will significantly impact the design of the infiltration facility).

3) Geotechnical Report for Simplified Infiltration Assessment (limited application) - The Simplified Infiltration Assessment may be approved for sizing Roof Downspout Infiltration Systems (Chapter D5-04.4.7B) where existing site soils meet the conditions specified in Chapter D5-03.2.4. Provide the following:
   - All of the information in *Geotechnical Report for Infiltration Feasiblity*.
   - Grain size testing demonstrating soils are Medium-grained or coarser outwash type soils (i.e., those Type A and Type B soils meeting USDA soil texture classes ranging from coarse sand and cobbles to medium sand).
   - Thickness and permeability of infiltration receptor horizon beneath proposed infiltration BMP. This is a summary of soil and shallow ground water conditions from the subsurface explorations and infiltration testing activities.
   - Basis for seasonal high groundwater level determination.
   - Describe lateral extent of infiltration receptor horizon, including a detailed description of the condition of the upper soil structure, including the pathway the discharged stormwater will take.
   - Discuss the discharge point or area of the infiltrating water, particularly at it relates to potential drainage impacts to adjacent properties, wetlands, streams or to geologic hazards. Geologic cross sections are recommended to illustrate lateral extent and discharge point or area of infiltrated water, if warranted.
   - Results and conclusions.
   - Raw data and calculations, to be included in an appendix.
4) Geotechnical Report for Standard Infiltration Assessment - For projects where infiltration is feasible and infiltration BMPs are proposed per Chapter D5, provide the following:
   - All of the information in *Geotechnical Report for Infiltration Feasibility.*
   - Thickness and permeability of infiltration receptor horizon beneath proposed infiltration BMP. This is a summary of soil and shallow ground water conditions from the subsurface explorations and infiltration testing activities.
   - Evaluation of native soils for determination of groundwater protective characteristics, if required.
     - Cation Exchange Capacity
     - Organic Matter Content
     - Grain Size Distribution
   - Basis for seasonal high groundwater level determination:
     - Description of methods used and the standards upon which the methods were based.

DRAFT

  - Description of groundwater levels relative to the investigation depth and vertical separation requirements per Chapter D5.
  - Seasonal fluctuation of groundwater table based on well water levels and observed mottling of soils and groundwater flow direction.
- Assessment of ambient groundwater quality, if that is a concern.
- Field-measured and design infiltration rate: discussion of correction factors selected, basis of selection, and resulting design infiltration rates.
- Describe lateral extent of infiltration receptor horizon, including a detailed description of the condition of the upper soil structure, including the pathway the discharged stormwater will take.
- Discuss the discharge point or area of the infiltrating water, particularly at it relates to potential drainage impacts to adjacent properties, wetlands, streams or to geologic hazards. Geologic cross sections are recommended to illustrate lateral extent and discharge point or area of infiltrated water, if warranted.
- Results of ground water mounding analysis, if required per Chapter D5, provide the following:
  - Description of data used.
  - Analysis procedures, including modeling tools and methods.
  - Potential for groundwater mounding or seepage as a result of proposed infiltration facilities.
- Results and conclusions.
- Raw data and calculations, to be included in an appendix.

5) Other Reports

Other reports may be required in accordance with BCC 20.25 to provide environmental information and to present proposed strategies for maintaining, protecting and/or mitigating critical areas. See the referenced code section for Wetland Delineation Report/Wetland Mitigation Plan, Habitat Management Plan, and Hydrogeological Report requirements. Other reports may also be required by other agencies and/or to support additional drainage design requirements beyond the minimum stormwater requirements.

D2-07 AS-BUILT DOCUMENTATION

For all storm drainage projects, the Developer or City Department responsible for the project shall provide surveyed as-built plans at completion of the project. This includes private commercial or multi-family systems for which the Professional Engineer provides a written compliance letter.

D2-07.1 General Standards

As-built plans shall be based on field survey information. All survey work shall be performed under the supervision of a Professional Land Surveyor registered in the State of Washington. Horizontal locations shall be recorded to within one tenth (0.1’) of a foot. Rim

DRAFT

and invert elevations at drainage structures shall be recorded to within one one-hundredth (0.01') of a foot.

All pipe lengths and dimensions are based on horizontal distances, unless slope is greater than 10%, to measure horizontal distance, inspector should note that length is "slope distance".

References/dimensions from right-of-way centerline for utility features in the public right-of-way, or from property line for utility features located within easements shall be recorded.

As-built information shall be recorded on plan and profile views of the contract drawings. The profile view shall note any changes from the design finished grade over each pipe line.

Items not built shall be crossed out. Changes to design attributes (elevations, pipe lengths, etc.) shall be have a ~~strikethrough~~ or be crossed out and relabeled in bold font.

New assets (pipes, structures, etc.) shall be drawn in bold linetype to differentiate from existing assets. Where new pipes connect to existing structures the Utility Asset numbers of those structures shall be noted on the drawing. Asset numbers can be obtained from the City's GIS data download webpage.

Asset ownership changes (e.g. City owned to Private or other agency and vice-versa) shall be clearly noted. Easement boundaries and recording numbers shall be recorded if obtained.

All as-built drawing sheets shall have an "As-Built" or "Record Drawing" stamp block with any appropriate disclaimers affized.

The AutoCAD files shall include all plans, profiles, notes, and details of the surface water improvements.

D2-07.1(a) CAD Standards

All AutoCAD "DWG" files are to utilize NAD_1983_HARN_StatePlane_Washington North Zone (FIPS 4601) coordinate system and the City of Bellevue NAVD 1988 vertical datum. Both must state on the drawings as the datums used.

Survey shall be located and field tied to at least two (2) City of Bellevue Survey Control Network monuments. Topographic elevations shall be referenced to City of Bellevue vertical control benchmarks. Survey Control Data Cards and Survey Benchmark Reports are available on-line at http://www.bellevuewa.gov/surveycontrol/, or from the Survey staff (425-452-4385).

- Sample Title Block with north arrow, scale, vicinity map, etc. are predefined in Appendix D-3.
- Block names, layer names, colors, and linetypes are predefined in Appendix D-5.

DRAFT

- All digital line work must be geometrically correct, topologically clean without slivers, dangles, undershoots or inappropriate breaks. Polygon features drawn as polylines must properly close without gaps.
- Each AutoCAD "DWG" file shall be prepared in Model space and UCS must be set to "World" then "Plan".
- XREF's are not allowed in the final AutoCAD "DWG" file delivery to the City.
- The standard insertion scale shall be feet.
- No blocks shall be "exploded".
- The standard text font shall be "Simplex".
- All drawing units shall be English.

D2-07.1(b) Submittals

The AutoCAD files shall include all plans, profiles, notes, and details of the surface water improvements. All as-built sheets must be submitted both electronically and on print:

- Digital as-built files are to be saved in AutoCAD version 2011 or newer and in "DWG" file format.
- The "DWG" file(s) shall be submitted on CD ROM or via email.

Each as-built sheet shall be plotted and submitted on full-size (22" x 34" or 24" x 36") bond paper.

D2-07.2 Required Information

1) Stormwater conveyance mains - Length (center of manhole/catch basin to center of manhole/catch basin), diameter, material, slope, direction of flow, note "private" if applicable, for privately maintained facilities. Show all private systems (e.g., to apartments, condominiums, commercial sites, and joint-use side storm drains). Label private system components as "PRIVATE SYSTEM".
2) Ditches - Length, direction of flow, material and slope of all constructed open channels, note "private" if applicable.
3) Stubs - Lengths, depth, station (stationing of stubs referenced from downstream structure), distance from property line. List slope if different than standard 2% and size if different than standard 6".
4) Structures – Structure types (e.g., CB, CB2, manhole, etc.), cover types, rim elevations, invert elevations (indicate direction of flow IN or OUT), size (diameter).
5) On-Site Stormwater Management BMPs:
    a. Locations, topographic features and dimensions of all On-site Stormwater Management, Flow Control, and Water Quality Treatment BMPs. Include bottom and top elevations, sideslopes, and longitudinal slopes. In plan view, include labeled contour lines at 1-foot intervals.

DRAFT

b. As-built revisions to any detail drawings that provide information associated with On-site Stormwater Management BMPs, such as cross-sections, lining material specifications (e.g. grass, plantings, etc.), plan or profile views, spillway elevations, inlet and outlet types, locations, and sizes, etc.
c. Location, type, size and elevation at tops, inverts and bottoms of any drainage system facilities adjacent to each pond, such as control structures, catch basins, etc.
d. Dimensions from Right-of-Way centerline or property line.
e. Notes and details about unusual situations and features.
f. Plant details including types, locations, and sizes of plants.
g. For private storm drainage systems (collection, on-site stormwater management, flow control, and treatment), the Professional Engineer shall submit a compliance letter, on a form furnished by the Utilities Department, for constructed stormwater management facilities.
h. For Single Family Private Systems, including On-site Stormwater Management BMPs on individual lots, use the approved storm design as shown on the building permit site plan as the basis for the as-built. Make revisions as necessary to reflect field changes. The changes need not be drafted (e.g. they can be edits marked on the site plan), but they must be readable.

D2-08 OPERATION AND MAINTENANCE MANUAL

A storm drainage operation and maintenance manual (O & M Manual) agreement shall be provided for all constructed source controls, on-site stormwater management, flow control, and treatment facilities that are owned, operated, and maintained by private parties, as well as City Department owned properties. For projects triggering Minimum Requirements #1 through #5, the Storm Drainage O&M Manual Agreement for Utilities Storm Connections (Minimum Requirements #1 through #5) shall be provided. For projects triggering all nine minimum requirements, the Storm Drainage O&M Manual Agreement for Utility Extension Agreements (Minimum Requirements #1 through #9) shall be provided.

Public drainage facilities, located in the public right-of-way and in dedicated easements, which are accepted by the City of Bellevue Storm and Surface Water Utility are operated and maintained as per the current edition of the City of Bellevue *Storm and Surface Water Maintenance Standards*, now or as hereafter amended. Individual O&M Manuals are not provided for these public drainage facilities. City Department owned properties are required to provide an O&M Manual agreement.

D2-08.1 Storm Drainage O&M Manual Agreement for Utilities Storm Connections (Minimum Requirements #1 through #5 Only)

DRAFT

For projects for which Minimum Requirements #1 through #5 only apply, the Storm Drainage O&M Manual Agreement for Utilities Storm Connections shall include, at a minimum:

The name of the property owner(s) responsible for maintenance and operation of the system.

1) The property address.
2) The Storm Connection Permit (UB Permit) number and issue date project is permitted under.
3) The conveyance, on-site stormwater management, flow control, and treatment facility types permitted.
4) Site diagram of the constructed (As-Built) storm drainage system, identifying the components, with profiles as needed.
5) Agreement to maintain facilities in accordance with BCC 24.06.065 and these Standards, now or as hereafter amended.

The final O&M Manual for Minimum Requirements #1 through #5 shall be submitted and approved by the Utilities Department prior to the Storm Connection Permit acceptance, where applicable, or prior to occupancy. The O & M Manual for Minimum Requirements #1 through #5 shall conform to King County's recording format requirements and be recorded against the property, as a covenant running with the land.

A copy of the manual shall be retained on-site or within reasonable access to the site, and shall be transferred with the property to the new owner.

D2-08.2 Storm Drainage O&M Manual Agreement for Utilities Extension Agreements (Minimum Requirements #1 through #9)

The Storm Drainage O&M Manual Agreement for Utilities Extension Agreements (Minimum Requirements #1 through #9), at a minimum, shall include:

1) The name of the party (or parties) responsible for maintenance and operation of the system, such as a Home Owners association, management company or the legal property owner.
2) Property legal description, address and project name, if applicable.
3) Agreement to maintain facilities in accordance with BCC 24.06.065 and these Standards, now or as hereafter amended.
4) A log of maintenance activities that indicates what actions have been taken, when and by whom. Log shall be kept available for inspection by City of Bellevue at any time. See Figure 2.1 below for recommended activity log format.
5) Prominently note the manual and log sheets location on site.
6) Maintenance instructions for any components not covered by the maintenance standards referenced above.

DRAFT

7) Professional Engineer's statement describing the storm drainage facilities and overall system, and how it is intended to function.
8) Site diagram of the constructed (As-Built) storm drainage system, identifying the components, with profiles as needed.
9) As-Built details of components, particularly flow control and treatment facilities, as needed for maintenance.

A draft must be submitted to the Utilities Department during the plan review process. The final O&M Manual for Minimum Requirements #1 through #9 must be approved by the Utilities prior to Utility Extension acceptance, where applicable, or prior to occupancy. The O & M Manual for Minimum Requirements #1 through #9 must conform to King County's recording format requirements and be recorded against the property, as a covenant running with the land.

A copy of the manual shall be retained on-site or within reasonable access to the site, and shall be transferred with the property to the new owner. The manual and log sheets must be available for inspection by the City of Bellevue upon request.

The O&M Manual for Minimum Requirements #1 through #9 shall be adjusted or revised at the end of the one (1) year warranty period, if needed, as a result of inspection findings and recommendations by the City. The revised O & M Manual shall be recorded against the property.

List regularly scheduled maintenance on a separate checklist based on the facility's O&M Manual for Minimum Requirements #1 through #9, and keep the checklist with this maintenance activity log.

A sample "Maintenance Activity Log" is shown in Figure 2.1.

DRAFT

Figure 2.1 - Sample Stormwater Facility Maintenance Activity Log for NPDES Permit

To be completed and provided to the City of Bellevue annually.

Send copy by fax to: 425-452-7116, or by mail to: Bellevue Utilities, Water Quality, P.O. Box 90012, Bellevue, WA 98009.

Property Name/Owner:	Site Address:
Property Manager/Contact:	Phone:
Storm Drainage Facility Type(s):	Location(s) on Property: (indicate on site map if possible)

Date	Reason for Inspection/Action (circle one)	Condition Observed	Action Taken	Initials
	Complaint or Problem Regular Maintenance			
	Complaint or Problem Regular Maintenance			
	Complaint or Problem Regular Maintenance			
	Complaint or Problem Regular Maintenance			
	Complaint or Problem Regular Maintenance			

DRAFT

	Complaint or Problem Regular Maintenance			
	Complaint or Problem Regular Maintenance			

DRAFT

END OF CHAPTER D2

DRAFT

CHAPTER D3 - HYDROLOGIC ANALYSIS

TABLE OF CONTENTS

Not included in draft document.

DRAFT

CHAPTER D3 - HYDROLOGIC ANALYSIS

D3-01 GENERAL

Hydrologic analysis is used to size conveyance, on-site stormwater management, flow control, and treatment levels and size facilities, or Best Management Practices (BMPs). This chapter describes the models and methods of analyses required or allowed by the City.

D3-02 HYDROLOGIC MODELS

Various hydrologic models and methods assist in the planning and design of conveyance, on-site stormwater management, flow control, and treatment facilities. Table 3.1 below lists the models and methods approved for use.

Three methods are allowed, including rational method, single hydrograph method, and Ecology-approved continuous simulation method. At this writing, the Ecology-approved continuous simulation models include the Western Washington Hydrology Model (WWHM) and MGS Flood, both of which derive from the Hydrologic Simulation Program FORTRAN (HSPF) model.

Table 3.1 Acceptable Uses of Runoff Computation Methods

TYPE OF COMPUTATION	Allowed For	Rational Method	Single Hydrograph Method	Ecology-Approved Continuous Simulation Model
PEAK FLOW CONVEYANCE SIZING (DESIGN FLOWS)	Tributary Areas < 10 acres (measured to individual conveyance elements)	OKAY for un-detained areas (1) and for detained areas if no storage routing is needed.	OKAY if no storage routing is needed.	OKAY if majority of tributary area is detained (2) and 15-minute time steps (3) are used.
	Tributary Areas >= 10 acres and < 25 acres	OKAY if no storage routing is needed.	OKAY if no storage routing is needed.	OKAY. Use 15-minute rainfall and model time step (3), or shorter time step (i.e., 5-minute) when available. Storage volume may be included in the model, as applicable.
FLOW CONTROL (NEW/EXISTING) & WQ FACILITY SIZING AND ANALYSIS	Projects requiring Water Quality (MR #6) and Flow Control (MR #7)			OKAY. Use 15-minute rainfall and model time step (3), or shorter time step (i.e., 5-minute) when available.
DOWNSTREAM ANALYSIS	All Projects	OKAY if no storage routing is needed. Use the 100-year, 24-hour rainfall event.	OKAY for tributary areas >= 10 acre if no storage routing is needed. Use the 100-year, 24-hour rainfall event.	OKAY. Use 15-minute rainfall and model time step (3), or shorter time step (i.e., 5-minute) when available.
PEAK FLOWS FOR APPLYING EXEMPTIONS & THRESHOLDS	All Projects			Use 15-minute rainfall and model time step (3), or shorter time step (i.e., 5-minute) when available.
ON SITE STORMWATER MANAGEMENT	All Projects			Use 15-minute rainfall and model time step (3), or shorter time step (i.e., 5-minute) when available.(4)

Notes:

a. Undetained areas are those upstream of or lacking flow control facilities or other storage features.

b. The majority of the tributary area is considered detained if the runoff from more than 50% of the tributary area is detained by a flow control or other storage facility meeting the requirements of this manual.

c. Use the 15-minute (or shorter, such as 5-minute if available) rainfall timeseries and 15-minute timestep. If 15-minute data are not available, a 1-hour time step may be used. See Volume 1, Chaper 4; Volume 5, Chapter 4; and Appendix III-C of Volume 3 of the DOE Manual for additional modeling requirements.

d. See LID BMP modeling requriements in Appendix III-C of Volume 3 of the DOE Manual. Part 1 of the appendix pertains to modeling using WWHM Version 3 (WWHM3), while Part 2 pertains to modeling using WWHM2012 software. WWHM2012 should be used according to the Part 2 modeling requirements whenever possible, unless deviations in modeling methods are pre-approved by the Director.

D3-02.02 Single Event Hydrograph Method

The Single Event Hydrograph Method (SBUH, NRSC or TR-55) is presented in Volume III Chapter 2 of the DOE Manual. The design storm for all hydrograph analyses is a 24-hour duration, standard SCS Type I A rainfall distribution resolved to 10-minute time intervals (Table 3.2 herein). See Figures 3.1 through 3.3 herein for the Bellevue 24-hour precipitation isopluvials.

Table 3.2 24 Hour Design Storm Hyetograph Values

Time from Beginning of Storm	Percent Rainfall	Cumulative Percent Rainfall
0	0.00	0.00
10	0.40	0.40
20	0.40	0.80
30	0.40	1.20
40	0.40	1.60
50	0.40	2.00
60	0.40	2.40
70	0.40	2.80
80	0.40	3.20
90	0.40	3.60
100	0.40	4.00
110	0.50	4.50
120	0.50	5.00
130	0.50	5.50
140	0.50	6.00
150	0.50	6.50
160	0.50	7.00
170	0.60	7.60
180	0.60	8.20
190	0.60	8.80
200	0.60	9.40
210	0.60	10.00
220	0.60	10.60
230	0.70	11.30
240	0.70	12.00
250	0.70	12.70
260	0.70	13.40
270	0.70	14.10
280	0.70	14.80
290	0.82	15.62
300	0.82	16.44
310	0.82	17.26
320	0.82	18.08
330	0.82	18.90
340	0.82	19.72
350	0.95	20.67
360	0.95	21.62
370	0.95	22.57
380	0.95	23.52
390	0.95	24.47
400	0.95	25.42
410	1.34	26.76
420	1.34	28.10
430	1.34	29.44

TABLE 3.2 24 Hour Design Storm Hyetograph Values (Cont.)		
Time from Beginning of Storm	**Percent Rainfall**	**Cumulative Percent Rainfall**
440	1.80	31.24
450	1.80	33.04
460	3.40	36.44
470	5.40	41.84
480	2.70	44.54
490	1.80	46.34
500	1.34	47.68
510	1.34	49.02
520	1.34	50.36
530	0.88	51.24
540	0.88	52.12
550	0.88	53.00
560	0.88	53.88
570	0.88	54.76
580	0.88	55.64
590	0.88	56.52
600	0.88	57.40
610	0.88	58.28
620	0.88	59.16
630	0.88	60.04
640	0.88	60.92
650	0.72	61.64
660	0.72	62.36
670	0.72	63.08
680	0.72	63.80
690	0.72	64.52
700	0.72	65.24
710	0.72	65.96
720	0.72	66.68
730	0.72	67.40
740	0.72	68.12
750	0.72	68.84
760	0.72	69.56
770	0.57	70.13
780	0.57	70.70
790	0.57	71.27
800	0.57	71.84
810	0.57	72.41
820	0.57	72.98
830	0.57	73.55
840	0.57	74.12
850	0.57	74.69
860	0.57	75.26
870	0.57	75.83

TABLE 3.2 24 Hour Design Storm Hyetograph Values (Cont.)		
Time from Beginning of Storm	**Percent Rainfall**	**Cumulative Percent Rainfall**
880	0.57	76.40
890	0.50	76.90
900	0.50	77.40
910	0.50	77.90
920	0.50	78.40
930	0.50	78.90
940	0.50	79.40
950	0.50	79.90
960	0.50	80.40
970	0.50	80.90
980	0.50	81.40
990	0.50	81.90
1000	0.50	82.40
1010	0.40	82.80
1020	0.40	83.20
1030	0.40	83.60
1040	0.40	84.00
1050	0.40	84.40
1060	0.40	84.80
1070	0.40	85.20
1080	0.40	85.60
1090	0.40	86.00
1100	0.40	86.40
1110	0.40	86.80
1120	0.40	87.20
1130	0.40	87.60
1140	0.40	88.00
1150	0.40	88.40
1160	0.40	88.80
1170	0.40	89.20
1180	0.40	89.60
1190	0.40	90.00
1200	0.40	90.40
1210	0.40	90.80
1220	0.40	91.20
1230	0.40	91.60
1240	0.40	92.00
1250	0.40	92.40
1260	0.40	92.80
1270	0.40	93.20
1280	0.40	93.60
1290	0.40	94.00
1300	0.40	94.40

TABLE 3.2 24 Hour Design Storm Hyetograph Values (Cont.)		
Time from Beginning of Storm	**Percent Rainfall**	**Cumulative Percent Rainfall**
1310	0.40	94.80
1320	0.40	95.20
1330	0.40	95.60
1340	0.40	96.00
1350	0.40	96.40
1360	0.40	96.80
1370	0.40	97.20
1380	0.40	97.60
1390	0.40	98.00
1400	0.40	98.40
1410	0.40	98.80
1420	0.40	99.20
1430	0.40	99.60
1440	0.40	100.00

Figure 3.1 2-Year 24-Hour Precipitation

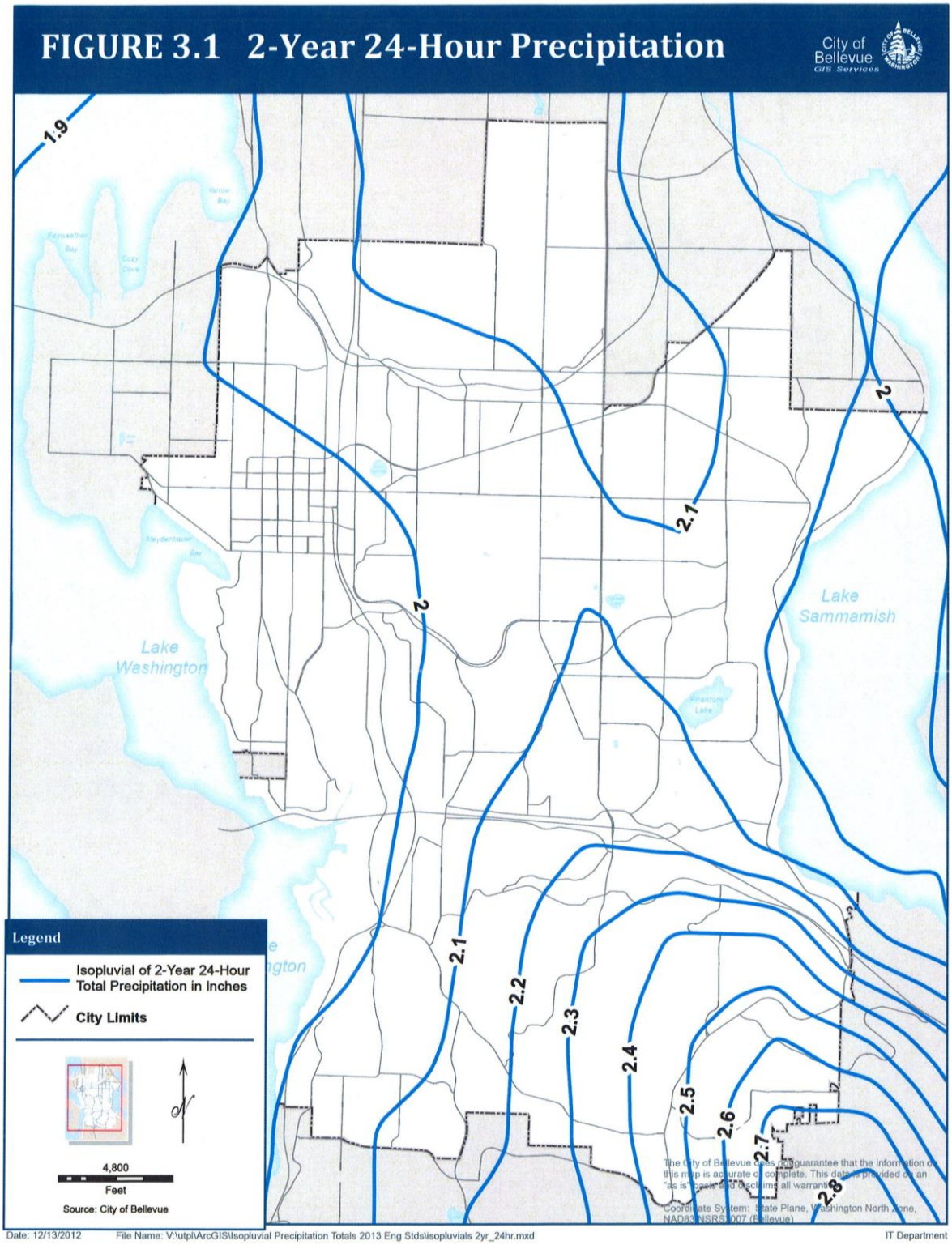

Figure 3.2 10-Year 24-Hour Precipitation

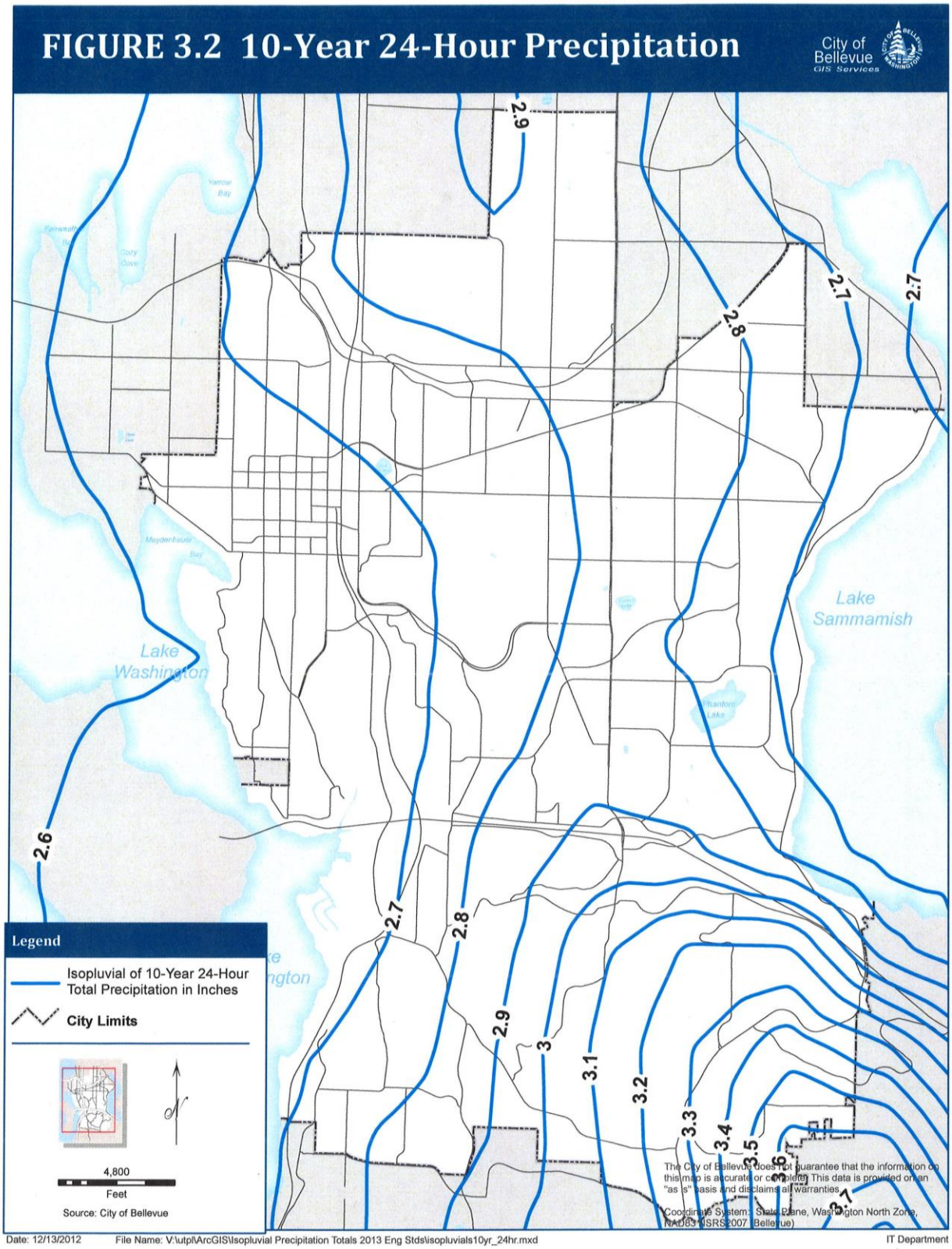

Figure 3.3 100-Year 24-Hour Precipitation

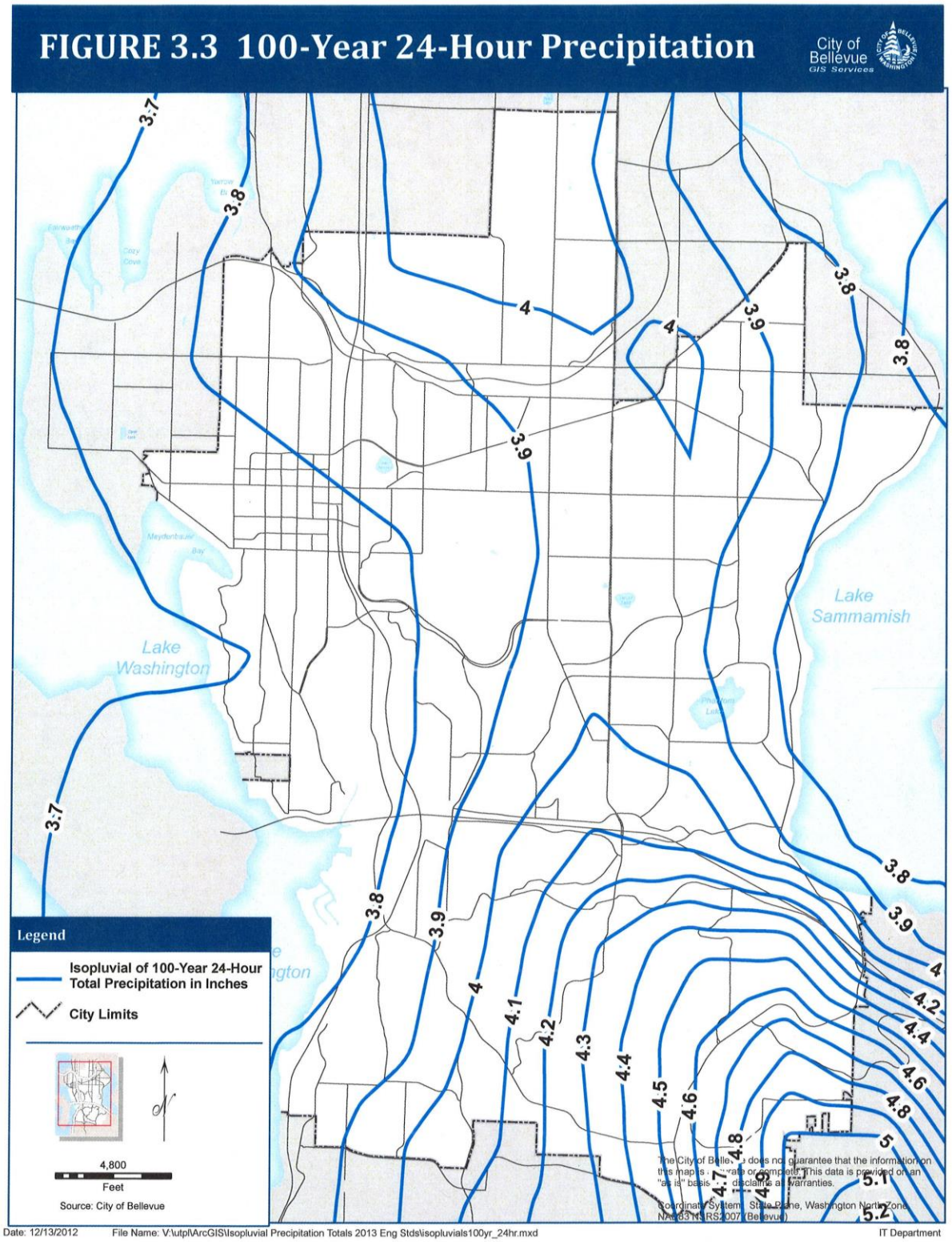

D3-02.03 Rational Method

A. General

The Rational Method may be used with some specific limitations:

- Only for use in predicting a conservative peak flow rate to determine the required capacity for conveyance facilities.
- Drainage sub-basin area (A) shall not exceed 25 acres for a single calculation.

B. Equation

The following is the traditional Rational Method equation:

$$Q_R = C*I_R*A$$

where:

Q_R = peak flow (cubic feet per second, cfs) for a storm of peak rainfall intensity "I_R" of a given return frequency (R)

C = estimated runoff coefficient (ratio of rainfall that becomes runoff)

I_R = peak rainfall intensity (inches/hour) for a given return frequency (R)

A = drainage sub-basin area (acres)

C. "C" Values

The allowable runoff coefficients to be used in this method are shown in Table 3.3 by type of land cover. For drainage basins containing several land cover types, the following formula may be used to compute a composite runoff coefficient "C_C". This composite value can only be used for peak flow analysis for pipe sizing, culverts, or channels.

$$C_C = ((C_1 \times A_1) + (C_2 \times A_2) + \ldots + (C_n \times A_n)) / A_t$$

where:

A_t = total area (acres)

$A_{1,2,n}$ = areas of land cover types

$C_{1,2,n}$ = runoff coefficients for each area land cover type

Table 3.3 Runoff Coefficients - "C" Values For The Rational Method

GENERAL LAND COVERS

LAND COVER	C	LAND COVER	C
Dense forest	0.10	Playgrounds (non-paved)	0.30
Light forest	0.15	Gravel areas	0.80
Pasture	0.20	Pavement and roofs	0.90
Lawns	0.25	Open water (pond, lakes, wetlands)	1.00

SINGLE FAMILY RESIDENTIAL AREAS
(Density is in dwelling units per gross acreage (DU/GA))

LAND COVER DENSITY	C	LAND COVER DENSITY	C
0.20 DU/GA (1 per 5 ac.)	0.17	3.00 DU/GA	0.42
0.40 DU/GA	0.20	3.50 DU/GA	0.45
0.80 DU/GA	0.27	4.00 DU/GA	0.48
1.00 DU/GA	0.30	4.50 DU/GA	0.51
1.50 DU/GA	0.33	5.00 DU/GA	0.54
2.00 DU/GA	0.36	5.50 DU/GA	0.57
2.50 DU/GA	0.39	6.00 DU/GA	0.60

For land covers not listed above, an area-weighted, composite coefficient "Cc x At" shall be computed based on the following equation: $Cc \times A_t, = (C_l \times A_1,) + (C_2 \times A_2) + \ldots + (C_n. \times A_n)$, where $A_t, = (A_a, + A_s + \ldots = A_n)$, the total drainage basin area.

* (For use only in determining peak design flow for analyzing and sizing pipes, culverts or channels)

Table 3.4 Coefficients For The Rational Method "Ir" - Equation

DESIGN STORM RETURN FREQUENCY (YEARS)	a_R	b_R
2-year	1.58	0.58
10-year	2.44	0.64
100-year	2.61	0.63

D. "I_R" Peak Rainfall Intensity

The peak rainfall intensity(I_R) for the specified return frequency ($_R$) design storm is determined using a unit peak rainfall intensity factor (i_R) for a given return frequency design storm using the following equation:

$$I_R = (P_r)\ (i_R)$$

where:

P_r is the Total precipitation at the project site for the 24-hour duration design storm event for the given return frequency (from the Isopluvial Maps in Figures 3.1 through 3.3.

i_R = $(a_R)(T_C)^{-(b_R)}$; the unit peak rainfall intensity factor. a_R and b_R are coefficients (from Table 3.4) used to adjust the equations for the design storm return frequency ($_R$).

T_C is the time of concentration (minutes), calculated using the method described below only (Tc minimum value is 6.3 minutes and maximum value is 100 minutes).

E. "T_C" Time of Concentration (Rational Method Only)

The time of concentration is defined as the time it takes runoff to travel overland (from the onset of precipitation) from the most hydraulically distant location in the drainage basin to the point of discharge. Note that when the C_C of a drainage basin exceeds 0.60, the T_C and peak rate of flow shall be computed from the impervious and pervious areas separately. The computed peak rate of flow for the impervious surface alone may exceed that for the entire drainage basin using the total drainage basin T_C. The higher of the two peak flow rates shall then be used to size the conveyance facility. The T_C is computed by summation of the travel times(s) (T_t) of overland flow across separate flow path segments defined by the six categories of land cover from the chart published in 1975 by the Soil Conservation Service shown in Table 3.5.

The equation for time of concentration is:

$$Tc = T_1, + T_2 + \ldots + T_n$$

where:

$T_{1,2,n}$ is the consecutive flow path segments of different land cover category or having significant difference in flow path slope.

Table 3.5 k_R Values For T_t Using The Rational Method

LAND COVER CATEGORY	k_R
Forest with heavy ground litter and meadow	2.5
Fallow or minimum tillage cultivation	4.7
Short grass pasture and lawns	7.0
Nearly bare ground	10.1
Grassed waterway	15.0
Paved area (sheet flow) and shallow gutter flow	20.0

Travel time for each segment is computed using the following equation:

$$Tt = L/60V \text{ (minutes)}$$

[Note, the T, through an open water body (such as a pond) shall be assumed to be zero with this method.]

where:

L = the distance of flow across a given segment (feet)

V = avg velocity across the land cover (feet/second)

Average velocity (V) is computed using the following equation:

$$V = k_R \sqrt{SO}$$

where:

k_R = time of concentration velocity factor (feet/second) (see Table 3.5)

SO = slope of flow path (feet/feet)

D3-03 DESIGN FLOWS

When required by Chapter 24.06.065 (G) of the Storm and Surface Water Utility Code, analysis of the following flows for historic (forested), existing and post-development shall be provided to determine conveyance, on-site stormwater management, flow control, and treatment needs.

D3-03.1 Conveyance Sizing

For conveyance sizing, design flows can be generated with a single-event hydrology model, continuous hydrologic model or the rational method. For the single-event hydrology model or the rational method, the design flows is based on the 100-year, 24-hour storm. If using an Ecology approved continuous model, the design flow for conveyance is based on the flow associated with a 100-year return period. Continuous modeling for conveyance must use a 15-minute time step

and preferably a rainfall time series that has been disaggregated to a 15-minute or smaller increment. Rainfall based on the historic Seatac record is appropriate for use in Belleuve with a correction factor of 1.065.

D3-03.2 On-Site Stormwater Management

For modeling to size On-site Stormwater Management BMPs for Minimum Requirement #5, design flows are generated with an Ecology approved continuous hydrology model. When including On-site Stormwater Management BMPs on a project, credit maybe taken for flows controlled and/or treated on-site. The credit maybe implemented in modeling efforts through either a default or demonstrative method. The demonstrative method uses a long-term continuous simulation model, such as WWHM2012, to simulate the BMPs explicitly, while the default method uses default credits provided in Appendix III-B and Appendix III-C of the DOE Manual.

D3-03.3 Flow Control

For modeling to size flow control BMPs for Minimum Requirement #7, design flows are generated with an Ecology approved continuous hydrologic model. For a project located outside of the Sturtevant Creek basin (Section D1-04.2(g)), stormwater discharges from flow control facilities shall match developed discharge durations to historic (forested) durations for the range of pre-developed discharge rates from 50% of the 2-year peak flow up to the full 50-year peak flow.

For projects located within the Sturtevant Creek basin, which has been approved by Ecology as having had at least 40% total impervious surface areas since 1985, the pre-developed condition to be matched shall be the “historic” land cover condition, or a land cover condition commensurate with achieving a target flow regime identified by an approved basin study.

A comparison of the pre-project and post project flow rates should also be conducted to verify that flow control facilities are required. If the 100-year peak flow rate is increased by less than 0.1 cfs, flow control factilities are not required.

D3-03.4 Water Quality

For modeling to size wet pool treatment BMPs for Minimum Requirement #6, a single event hydrology model or the continuous hydrologic model may be used. For the single-event hydrologic modeling (TR55/SBUH method) the water quality design rates and treatment volumes shall be based on the 6-month, 24-hour storm which is assumed to be 72% of the 2-year, 24-hour storm as per Chapter 4 of Volume 5 of the DOE Manual (post-developed conditions).

All other water quality designs to meet Minimum Requirement #6 must be based on the analysis from a continuous hydrologic model. If treatment is being provided downstream from an engineered flow control facility that is sized in accordance with the default duration-based Ecology standard, the water quality design flow rate shall be the 2-year release from the flow control facility. The water quality treatment volume shall be based on the 91st percentile, 24-hour runoff volume. All shall be determined using the post-developed conditions.

For the continuous hydrologic modeling (Ecology approved model for post-developed conditions), the water quality design flow rate shall be based on the rate that would be capable of treating 91% of the influent runoff file. If sizing an infiltration-based Water Qaulity Treatment BMP (Chapter D5), the model shall also be used to demonstrate that the Water Quality Design Storm Volume (indicated by WWHM or MGS Flood) can infiltrate through the infiltration basin surface within

48 hours. The latter can be calculated by multiplying a horizontal projection of the infiltration basin mid-depth dimensions by the estimated long-term infiltration rate: and multiplying the result by 48 hours.

D3-04 MINIMUM IMPERVIOUS AREAS FOR MODEL INPUT

The following methods shall be used to determine minimum impervious areas input to the hydrologic model for purposes of sizing of conveyance, on-site stormwater management, flow control, and water quality treatment facilities. Refer also Chapter D1 for standards and requirements pertaining to minimizing impervious surface areas during site planning and design.

D3-04.1 Residential Developments

Residential developments shall use the maximum impervious area allowed on the lot per Land Use Code. The rest of the lot acres will be assumed to be landscaped area (including lawn).

The user inputs the number of residential lots and the total acreage of the residential lots (public right-of-way acreages and non-residential lot acreages excluded). The number of residential lots and the associated number of acres will be used to compute the average number of residential lots per acre. This value together with the number of residential lots and the impervious area in the public right-of-way will be used by the model to calculate the Total Impervious Area (TIA) for the proposed development. The areas covered by streets, parking areas, and sidewalk areas are input separately by the user.

A higher percent impervious area shall be required if the proposed project land use impervious lot coverage allows a greater impervious area coverage. Stormwater system designs shall take into account maximum future build-out of the proposed development, as allowed by land use code.

Site areas set aside in Native Growth Protection Areas (NGPAs) or Native Growth Protection Easements (NGPEs) shall be excluded from the gross acreage value used in calculating dwelling units per "gross" acre.

D3-04.2 - Other Development Types

For all other development types, including commercial and multi-family residential developments, use actual project values.

D3-05 FLOW CONTROL EXEMPTIONS

Refer to Section D1-04.2(g) for flow control exemptions that apply for sites draining to Lake Washington, Lake Sammamish, or Mercer Slough when discharging directly to those exempt water bodies via a conveyance system meeting the requirments of these Standards and the restrictions detailed in that section.

D3-06 SOIL TYPES

Use site-specific geotechnical information for the project site when available. If not available, use the *Soil Survey – King County Area* prepared by the National Resource Conservation Service (formerly Soil Conservation service) to identify the hydrologic soil group (HSG), permeability, and erosion and runoff rate characteristics, as summarized in the table below...

Table 3.6 Hydrologic Soil Groups for Soils in the City of Bellevue

Soil Source	Soil Categories [a]	USDA Texture	Hydrologic Soil Group	Surficial Permeability (depth range, inches: inches/hour)	Symbol	Slope Category	Erosion Hazard	Runoff Rate
Soils From Fine-Grained Alluvium or Depressions	Bellingham	Silt loam	C/D	0-14: 0.63-2 14-60: 0.06-0.2	Bh	0-2%	Slight	Slow
	Snohomish	Silt loam	C/D	0-17: 0.63-2 17-327: 0.63-2 27-60: 2-6.3	So	0-2%	Slight	Slow
	Seattle muck	Mucky peat	B/D	0-60: 0.63-2	Sk	~0%	Little-none	Ponds
	Salchar muck	Muck, silt loam, fine sandy loam	B/D	0-28: 0.63-2 28-60: 2-20	Sm	~0%	None	Ponds
	Tukwila muck	Muck	B/D	0-60: 0.63-2	Tu	~0%	Slight	Ponds
	Orcas	Sphagnum peat	A/D	0-60: >20	Or	0-1%	None	Ponds
Soils From Recent Alluvium	Pilchuck	Loamy fine sand	A	0-38: 6.3-20	Pc	0-2%	Moderate-severe	Slow
	Norma	Sandy loam	A/D	0-60: 2-6.3	No	0-2%	Slight	Slow
Soils From Recessional Outwash	Everett, Arents-Everett	Gravelly sandy loam	B, A	0-17: 2-6.3 17-32: 6.3-20 32: >20	EvB, An	0-5%	Slight	Slow
					EvC	5-15%	Slight-Moderate	Slow-Medium
					EvD	15-30%	Moderate-Severe	Medium-Rapid
	Indianola	Loamy fine sand	A	0-30: 6.3-20 30: >20	InA	0-4%	Slight	Slow
					InC	4-15%	Slight-moderate	Slow-Medium
		Fine sandy loam	not in area		RaC	6-15%	Moderate	Medium

	Ragnar (Included for reference by Ragnar-Indianola Assoc.)			0-27: 2-6.3 27-60:6.3-20	RaD	15-25%	Severe	Medium-Rapid
	Ragnar-Indianola Association	Fine sandy loam and loamy fine sand	A	See: Indianola, Ragnar	RdC	2-15%	See others	See others
					RdE	15-25%	See others	See others
Soils From Glacial Till	Alderwood	Gravelly sandy loam	C [b]	0-27: 2-6.3 27: <0.6	AgB	0-6%	Slight	Slow
					AgC	6-15%	Moderate	Slow-Medium
					AgD	15-30%	Severe	Medium
	Arents-Alderwood	Gravelly sandy loam	C [b]	0-27: 2-6.3 27: <0.6	AmB	0-6%	Slight	Slow
					AmC	6-15%	Moderate-severe	Medium
	Alderwood and Kitsap	Gravelly sandy loam and silt loam	C [b]	See: Alderwood, Kitsap	AkF	25-70%	Severe-Very severe	Rapid-Very rapid
Soils From Glacially Consolidated Lacustrine	Kitsap	Silt loam	C	0-24: 2-6.3 24-60: <0.6	KpB	2-8%	Slight-Moderate	Slow-Medium
					KpD	15-30%	Rapid	Severe
Soils From Bedrock	Beausite	Gravelly sandy loam	C	0-19: 2-6.3 19-38: 2-6.3 38: <0.6	BeC	6-15%	Moderate	Medium
					BeD	15-30%	Severe	Rapid

Notes:

a. Soil groups from NRCS Web Soil Survey. Other information from USDA (1973). Urban land, Briscot, Buckley, and Mixed Alluvial groups not included due to limited area.

b. Hydrologic group for Alderwood Soils changed from B to C, per DOE Manual.

END OF CHAPTER D3

CHAPTER D4 - HYDRAULIC ANALYSIS & DESIGN

TABLE OF CONTENTS

Not included in draft document.

DRAFT

CHAPTER D4 - HYDRAULIC ANALYSIS & DESIGN

D4-01 GENERAL

A. Use the criteria set forth in Section 24.06.065 of the Storm and Surface Water Utility Code and the information provided herein to plan, design, and construct stormwater systems and facilities.

B. Design the conveyance, on-site stormwater management, flow control, runoff treatment, and emergency overflow elements to accommodate runoff from the site and areas tributary to the site to prevent damage and injury. Conveyance systems shall be sized to safely convey the 100-year peak runoff from areas tributary to the site to the discharge location. An emergency overflow for flow control facilities shall be provided which prevents property damage or erosion caused by system failure.

C. Roof and footing drains, yard drains, underdrains, ditches, swales, stormwater conveyance systems, etc. shall be installed to prevent damage or nuisance to adjacent properties and the public right-of-way due to the proposed development.

D. Consider drainage system reliability in terms of layout, specification of materials and methods of installation, and the influence of other activities in the area both during and after construction.

E. Minimize the frequency and difficulty of future maintenance by analyzing potential system failures and failure remedies. Access structures shall be accessible by City-owned maintenance equipment such as 5 cubic yard (CY) dump trucks and vactor-type trucks.

F. Visual impact and potential problems such as mosquito breeding, landscaping, odors, etc. shall be addressed.

G. All lengths and dimensions shall be horizontal distances, no slope distances on plans.

H. If working in existing streets, indicate type of pavement restoration required by authority having jurisdiction, or refer to right-of-way use permit.

I. Dimension existing and new storm drain locations from right-of-way line and/or property line, or label stations and offsets.

J. Check with Utility Reviewer to determine how surrounding development will affect design (e.g. serve to extreme of property if adjacent property has potential for future development).

K. On plans, show existing manholes/ catch basins or give reference distances to existing manholes/ catch basins near project, including manhole/ catch basin number and invert/rim elevations.

L. Check with local jurisdiction for necessary permitting requirements.

M. Existing storm drain lines to be abandoned shall be filled completely with sand, concrete, or controlled density fill; or removed.

N. Manholes connected to lines being abandoned shall be re-channeled with 3,000 pound per square inch (psi) cement concrete.

O. Storm pipes (side and main lines) shall not be used for the grounding of electrical systems or for the maintenance, integrity or continuity of any grounding attachment or connection.

P. Placement of surface appurtenances (manhole lids, catch basin lids, etc.) in tire track of traffic lanes shall be avoided whenever possible.

Q. Soil nails shall not be installed at or above pipes and shall include a minimum 5 foot clearance if installed below pipes.

R. Clearly label public and private system on plans. Private systems shall be marked "Private" and shall be privately owned and maintained.

D4-02 OUTFALLS AND DISCHARGE LOCATIONS

A. General

Properly designed outfalls are critical to minimizing or preventing adverse impacts occurring as the result of concentrated discharges from pipe systems and culverts, both on-site and downstream. Outfall systems include pipe outfalls, rock splash pads, flow dispersal trenches or other energy dissipaters, and tightline systems. A tightline system is typically a continuous length of pipe used to convey flows down a steep or sensitive slope with appropriate energy dissipation at the discharge end. In general, it is recommended that conveyance systems be designed to reduce velocity above outfalls to the extent feasible.

Design Criteria

At a minimum, all outfalls shall be provided with a rock splash pad appropriately sized for the discharge (see Bellevue Standard Detail D-59, except as specified below and in Table 4.1):

1. When discharging to an existing ditch, swale, or stream, energy dissipation is required to minimize erosion.
2. The flow dispersal trench shown in Bellevue Standard Detail NDP-22 shall be used as an outfall only after other on-site stormwater management BMPs have been determined infeasible due to site conditions in accordance with Chapter D5. Refer to BMP T5.10B in Volume 5, Chapter 5 of the DOE Manual for Roof Downspout Dispersion. For outfalls with a velocity at a design flow greater than 10 feet per second (fps), an engineered energy dissipater shall be required, per Bellevue Standard Detail D-38.
3. Tightline systems shall be used when on-site storm water management is not required, or where it is required but does not fully mitigate stormwater flows per Chapter D5.
4. Storm drain pipelines shall not be installed above ground.
5. Outfalls shall discharge at the bank-full water surface elevation (modeled as the peak water surface elevation corresponding with the 2-year, 24-hour storm) in open channels or streams.
6. Conveyance systems downstream of flow control facilities or treatment facilities shall be designed to prevent backwater conditions in those facilities.
7. The use of pumped systems or backflow preventers shall not be used to prevent flooding due to backwater conditions.

Table 4.1 Rock Protection At Outfalls

Discharge Velocity at Design Flow (fps)		REQUIRED PROTECTION				
Greater than	Less than or equal to	Minimum Dimensions(1)				
		Type	Thickness	Width	Length	Height
0	5	Rock lining(2)	1 foot	Diameter + 6 feet	8 feet or 4 x diameter, whichever is greater	Crown + 1 foot
5	10	Riprap(3)	2 feet	Diameter + 6 feet or 3 x diameter, whichever is greater	12 feet or 4 x diameter, whichever is greater	Crown + 1 foot
10	20	Energy Dissipater Standard Detail D-38	As required	As required	As required	Crown + 1 foot
20	N/A	Engineered energy dissipater required				

(1) These sizes assume that erosion is dominated by outfall energy. In many cases, sizing will be governed by conditions in the receiving waters. In such instances, the Professional Engineer shall conduct modeling of design peak flows, water surface elevations, velocities, shear stresses, etc., as needed to design appropriate engineered energy dissipater facilities for the given outfall site conditions.

(2) **Rock lining** shall be quarry spalls with gradation as follows:

Passing 8-inch square sieve:	100%
Passing 3-inch square sieve:	40 to 60% maximum
Passing $^3/_4$-inch square sieve:	0 to 10% maximum

(3) **Riprap** shall be reasonably well graded with gradation as follows:

Maximum stone size:	24 inches (nominal diameter)
Median stone size:	16 inches
Minimum stone size:	4 inches

Note: Riprap sizing governed by side slopes on outlet channel is assumed to be approximately 3H:1V.

D4-02.1 Discharge Location Impacts

Stormwater runoff from the project shall produce no significant adverse impact to downslope properties and shall discharge to the existing downstream drainage system if on-site stormwater management does not fully mitigate flow. See the Site Analysis and Planning requirements (Chapter D1), which reduce or eliminate stormwater runoff from the site to minimize discharge impacts.

D4-02.2 Unconcentrated Flow

Where no downstream drainage system exists adjacent to the property and the runoff from the project site was previously unconcentrated flow, on-site stormwater management shall be implemented to the extent feasible to minimize or eliminate stormwater runoff (Chapter D1 and D5). Any remaining runoff shall be connected to the downstream drainage system, which shall be extended to the property line and conveyed across the downstream properties to an approved discharge location. The Developer shall secure drainage easements from the downstream owners and record such easements at the King County Office of Records and Elections prior to drainage plan approval, if necessary.

Where no conveyance system exists at the abutting downstream property line and the natural (existing) discharge is unconcentrated, any runoff concentrated by the proposed project must be discharged as follows:

- If the 100-year peak discharge is less than or equal to 0.2 cfs under existing conditions and will remain less than or equal to 0.2 cfs under developed conditions, then the concentrated runoff may be discharged onto a rock pad or to any other system that serves to disperse flows.
- If the 100-year peak discharge is less than or equal to 0.5 cfs under existing conditions and will remain less than or equal to 0.5 cfs under developed conditions, then the concentrated runoff may be discharged through a dispersal trench or other dispersal system provided the Developer can demonstrate that there wil be no significant adverse impact to downhill properties or drainage system.
- If the 100-year peak discharge is greater than 0.5 cfs for either existing or developed conditions, or if a significant adverse impact to downhill properties or drainage systems is likely, then a conveyance system must be provided to convey the concentrated runoff across the downstream properties to an acceptable discharge point. Drainage easements for this conveyance system must be secured from downstream property owners and recorded prior to engineering plan approval.

D4-02.3 Temporary Discharges to the Sanitary Sewer

Surface water runoff into the sanitary sewer system is generally prohibited by the Utility Code.

Unavoidable temporary discharges into the sanitary sewer system must meet with the approval of:

- King County Wastewater Treatment Division, Industrial Waste Program
- The Engineering Division of the Utilities Department; and
- The Operations & Maintenance Division, Water Quality Section, of the Utilities Department

For approved temporary discharges, the Operations & Maintenance Division, Water Quality Section, of the Utilities Department will review for approval the:

- Location of connection to the sanitary sewer
- Method for the connection and pre-connection requirements, i.e. settling tanks, sump pump, etc.
- Time of discharge
- Duration, rate and volume of the discharge
- Other applicable discharge conditions

Temporary discharges to sewer lakelines are prohibited.

The Developer is responsible for first obtaining permission and a sewer permit for constructed connections from the City prior to requesting a discharge permit from King County Wastewater Treatment Division, Industrial Waste Program.

D4-03 OFF-SITE CAPACITY ANALYSIS

Pursuant to Section 24.06.070(D) of the Storm and Surface Water Utility Code, an off-site capacity analysis is required whenever the location of discharge will be changed by a proposed development or redevelopment. If the rate of discharge will be changed, an analysis may be required.

Different levels of analysis of the drainage system are required, depending on both the location of the project in the basin and the information determined in the Level 1 analysis (described below). When required, a Level 1 analysis must be submitted with the Developer Extension Agreement.

D4-03.1 Levels of Analysis

Level 1 Analysis

The following activities shall be conducted for a Level 1 Analysis:

- Physically inspect the existing on- and off-site drainage system and investigate any known problems. The analysis must extend from the proposed project discharge location to the point downstream where the site runoff would join the existing drainage course.
- On a map (minimum USGS 1:24000 Quadrangle Topographic Map) delineate the upstream tributary drainage areas to the site and to the downstream system.
- Describe in narrative form observations regarding the makeup and general condition of the tributary drainage areas and drainage system. Include such information as tributary drainage areas (size, land uses, conditions, etc.), pipe sizes, channel characteristics, and drainage structures.
- Specifically, the analysis must identify on the map, and describe in the narrative any evidence of existing or anticipated problems, such as erosion, flooding, nuisance ponding, etc.
- Following review of the Level 1 analysis, the City will determine whether the Level 2 analysis is required, based on the evidence of existing or anticipated problems.

Level 2 Analysis

The following activities shall be conducted for a Level 2 Analysis, at a minimum:

- At each existing and/or predicted drainage problem location identified in the Level 1 analysis, develop hydrographs or Rational Method peak flow rates for the 100-year, 24-hour design storm events for the total composite drainage area tributary to that location for existing runoff conditions, excluding the proposed project site runoff.
- Determine the capacity of the existing drainage system. Non-survey field data (hand tapes, hand level and rods, etc.) and computations using Manning's equation for normal flow are acceptable for this analysis.
- At each existing and/or predicted drainage problem location, compute the proposed project's developed runoff hydrograph.
- Evaluate impacts of adding the controlled peak runoff from the proposed project site to the peak runoff from the total composite drainage area tributary to these locations.

Additional information may be required to determine that impacts have been adequately mitigated and to verify the capacity of the conveyance system.

D4-03.2 Solutions to Identified Drainage Problems

For any anticipated off-site problem resulting from the development or redevelopment, the Developer must demonstrate that the proposed project has been designed to mitigate the anticipated problem.

As an alternative, the Developer, with approval by the City, may arrange with the owners of the off-site properties to install measures which will correct the existing or mitigate the anticipated problem.

In some cases, existing public drainage system problems may already be scheduled for correction by the City. In these cases, the Developer should contact the Utilities Department to determine current capital improvement project schedules.

Any proposed drainage easements must be executed by the affected property owners and be recorded prior to approval for construction.

D4-04 EASEMENT REQUIREMENTS

D4-04.1 General

Section 24.06.085 of the Storm and Surface Water Utility Code defines when easements are required for stormwater facilities, and other general easement requirements.

Drainage facilities that are constructed to serve predominantly public property or public right-of-way shall be publicly owned, per Section 24.06.085 of the Storm and Surface Water Utility Code, and shall be dedicated to the City.

Where possible, public conveyance systems shall be constructed within the public right-of-way. When site conditions make this infeasible, public drainage easements or dedicated tracts shall be provided. Private drainage facilities shall be constructed outside of the public right-of-way, on private property. Private easements may be needed.

When vehicle access for maintenance is required, a dedicated tract or access easement shall be provided. The access easement conditions shall prohibit the property owner from installing any structures, improvements, retaining walls, etc. which would hinder access to the drainage facility or necessitate restoration of access easement area.

Storm drainage facilities shall be located in the center of the easement. Any required easement shall be obtained by the Developer at his sole expense.

D4-04.2 Easement Documentation Requirements

All easements shall be shown on the site plans and identified as "private" or "public", together with the width dimension and utility use, e.g. *20' Public Drainage Utility Easement.*

All documents for public easements shall conform to these Utilities Engineering Standards, will be provided on the City's easement template and shall comply with King County Recorder's Office formatting requirements. Include the King County tax parcel number(s), site address, owner names and site legal description. All pages must be numbered. Sheets shall be 8-1/2" by 11" or 8-1/2" by 14". Margins and font size must conform to King County recording format requirements.

Easements shall be dedicated to and approved by the City prior to acceptance of a public utility system. The Grantee shall be the "CITY OF BELLEVUE, a Washington municipal corporation, its heirs, successors and assigns". The City may require indemnification agreements to hold the City harmless where maintenance access across private property is deemed necessary.

The description contained within the easement document shall be prepared and stamped by a land surveyor licensed in the State of Washington. The description shall be identified as an Exhibit, together with the title of the utility use, e.g. *Permanent Public Drainage Utility Easement*. The description shall be clearly written and referenced to the underlying property. The description shall be accompanied by an additional graphic Exhibit which depicts a scaled drawing of the easement location relative to the subject parcel.

Off-site easements shall be delivered to the Utility prior to issuing a Notification to Proceed with construction. Submittal of on-site easements may be delayed until completion of construction improvements.

Bills of Sale for all utility facilities appurtenant to public easements or tracts shall be given to the City.

D4-04.3 Easement Width Requirements

Required easement widths for pipes, vaults, open channels, maintenance access roads, and buildings shall be as follows:

- Pipes and Vaults - Minimum easement width shall be as set forth below; or determined by extending a line from the bottom edge of the structure or the bottom of the excavation at the outside diameter for pipes, at a 1 Horizontal :1 Vertical (1H:1V) slope until it intercepts the finished grade, whichever is greater.
- Pipes 18-inch and Smaller – Minimum easement width shall be 15 feet.

- Pipes/Vaults 18-inch to 5-feet-wide - Minimum easement width shall be 20 feet.
- Pipes/Vaults 5-feet-wide or Larger - Minimum easement width shall be outside dimension plus 15 feet, rounded to the nearest whole foot, but not less than 20 feet in width.
- Open Channels to be Maintained by the City – Minimum easement width shall include the entire width of the channel (top-of-bank to top-of-bank or width at freeboard elevation) plus maintenance access when deemed necessary by the City. For privately-maintained open channels, the private utility easement width shall be, at minimum, the width of the channel at freeboard elevation.
- Maintenance Access Roads - Minimum access easement width shall be 15 feet.
- Multi-family and Commercial Sites – Minimum easement width shall be 20 feet, provided between buildings.
- Buildings - When passing between any two buildings (residential or commercial, etc.) which are 25 feet apart or less, the easement width shall extend the full width between the buildings and the depth of the sewer line shall not exceed 10 feet.

D4-05 CONVEYANCE SYSTEMS

D4-05.1 General

Use the criteria set forth in Section 24.06.070(B)(4) of the Storm and Surface Water Utility Code and the information provided herein to plan, design and construct stormwater conveyance systems.

Off-site stormwater flows passing through the site shall be conveyed by a hydraulically adequate conveyance system as set forth herein. Off-site flows can only be routed to flow control or treatment facilities if allowed by D4-03, and if those facilities are properly sized for the additional flows.

D4-05.2 Siting Criteria

The following criteria for siting pipe conveyance facilities, open channel conveyance facilities, and perforated stub-out connections shall be used:

A. Pipe Conveyance Facilities:

- Where such facilities would not interfere with other underground utilities
- Where allowable design flow rates would not be exceeded by the actual contributing flow rates
- Outside the footprint of (i.e., not beneath) any structure (e.g., buildings, sheds, decks, rockeries or retaining walls which run parallel to the pipeline, carports, etc.), except in the Central Business District, zero lot-line areas, or upon approval by the City
- 10 feet or outside the 1H:1V plane from the bottom edge of the pipe or structure to the finished grade at a building or structure, whichever is greater
- 10 feet or outside the 1H:1V plane from the bottom edge of the pipe or structure to the property line at finished grade when an easement is not provided on the adjacent property, whichever is greater

- Within one-half of the minimum easement width from a structure

B. Open Channel Conveyance Facilities – Open channel conveyance facilities shall be sited 10 feet or more from any structure foundation, measured horizontally from the edge of the facility at the freeboard elevation.

C. Perforated Stub-Out Connections – Perforated stub-out connections shall be sited at least 5 feet from property lines and structures, from finish grade as measured from inside the building.

D4-05.3 Setbacks and Clearances from Other Utilities

Setbacks and clearances from other utilities may be modified if the Developer adequately demonstrates that the potential for flooding or erosion impacts are minimal, if approved by the Utilities Reviewer.

A. Clearances - All horizontal and vertical clearances for utilities listed below are from edge-to-edge of each pipe.

1. Horizontal:

a) Cable TV	5 feet
b) Gas	5 feet
c) Power	5 feet
d) Sewer	5 feet
e) Telephone, Fiber Optics	5 feet
f) Water	5 feet

2. Vertical:

a) Cable TV	1 foot
b) Gas	1 foot
c) Power	1 foot
d) Sewer	1 foot
e) Telephone, Fiber Optics	1 foot
f) Water	1 foot

For open channels, horizontal and vertical clearance requirements will be determined on a case-by-case basis.

B. Parallel Utilities - Check for crossing or parallel utilities. Avoid crossing at highly acute angles (the smallest angle measure between utilities should be between 45 and 90 degrees).

C. Crossing Water Mains - Where storm pipes cross over or below a water main, one full length of pipe shall be used with the pipes centered for maximum joint separation.

D. Utilities Coordination - Send a letter and preliminary plan to existing utilities to inform them of new construction. Request as-built information and incorporate into plans and Storm Drainage Report. At a minimum the following utilities should be contacted: cable television, natural gas, power, sanitary sewer, telephone, water and telecommunications companies.

E. Seattle Public Utilities Transmission Pipelines - See standards for utilities installed in proximity of Seattle Public Utilities Transmission Pipelines in Appendix D-7, *Storm and Surface Water Reference Standards.*

D4-05.4 Open Channel Design Criteria

A. General

The methods and criteria below have been adapted from the 2016 King County Surface Water Design Manual.

Open channels may be classified as either natural or constructed. Natural channels are generally referred to as rivers, streams, creeks, or swales, while constructed channels are most often called ditches, or simply channels. The Critical Areas, Shorelines, and Clearing and Grading Codes must be reviewed for requirements related to streams.

The King County publication titled *Guidelines for Bank Stabilization Projects* primarily focuses on projects on larger rivers and streams, but the concepts it contains may be used in conjunction with other natural resource information for stabilization projects on smaller systems. The WDFW Integrated Streambank Protection Guidelines is another useful reference.

1. Natural Channels

Natural channels are defined as those that have occurred naturally due to the flow of surface waters, or those that, although originally constructed by human activity, have taken on the appearance of a natural channel including a stable route and biological community. They may vary hydraulically along each channel reach and should be left in their natural condition, wherever feasible or required, in order to maintain natural hydrologic functions and wildlife habitat benefits from established vegetation.

2. Constructed Channels

Constructed channels are those constructed or maintained by human activity and include bank stabilization of natural channels. Constructed channels shall be either vegetation-lined, rock-lined, or lined with appropriately bioengineered vegetation.

a. Vegetation-Lined

Vegetation-lined channels are the most desirable of the constructed channels when properly designed and constructed. The vegetation stabilizes the slopes of the channel, controls erosion of the channel surface, and removes pollutants. The channel storage, low velocities, water quality benefits, and greenbelt multiple-use benefits create significant advantages over other constructed channels. The presence of vegetation in channels creates turbulence that results in loss of energy and increased flow retardation; therefore, the design engineer must consider sediment deposition and scour, as well as flow capacity, when designing the channel. Bioretention swales may also be designed to provide conveyance, on-site stormwater management, flow control, and/or treatment per Chapter D5.

b. Rock-Lined

Rock-lined channels are necessary where a vegetative lining will not provide adequate protection from erosive velocities. They may be constructed with riprap, or slope mattress linings. The rock lining increases the turbulence, resulting in a loss of energy and increased flow retardation. Rock

lining also permits a higher design velocity and therefore a steeper design slope than in grass-lined channels. Rock linings are also used for erosion control at culvert and storm drain outlets, sharp channel bends, channel confluences, and locally steepened channel sections.

c. Bioengineered Vegetation-Lined

Bioengineered vegetation lining is a desirable alternative to the conventional methods of rock armoring. Soil bioengineering is a highly specialized science that uses living plants and plant parts to stabilize eroded or damaged land. Properly bioengineered systems are capable of providing a measure of immediate soil protection and mechanical reinforcement. As the plants grow they produce a vegetative protective cover and a root reinforcing matrix in the soil mantle. This root reinforcement serves several purposes:

- The developed anchor roots provide both shear and tensile strength to the soil, thereby providing protection from the frictional shear and tensile velocity components to the soil mantle during the time when flows are receding and pore pressure is high in the saturated bank.
- The root mat provides a living filter in the soil mantle that allows for the natural release of water after the high flows have receded.
- The combined root system exhibits active friction transfer along the length of the living roots. This consolidates soil particles in the bank and serves to protect the soil structure from collapsing and the stabilization measures from failing.
- The vegetative cover of bioengineered systems provides immediate protection during high flows by laying flat against the bank and covering the soil like a blanket. It also reduces pore pressure in saturated banks through transpiration by acting as a natural "pump" to "pull" the water out of the banks after flows have receded.

B. Design Criteria

1. General

- Open channels shall be designed to provide required conveyance capacity and bank stability while allowing for aesthetics, habitat preservation, and enhancement. Open channels shall be consistent with the WDFW Integrated Streambank Protection Guidelines.
- Channel cross-section geometry shall be trapezoidal, triangular, parabolic, or segmental as shown in Figure 4.3 through 4.5. Side slopes shall be no steeper than 3H:1V for vegetation-lined channels and 2H:1V for rock-lined channels.
- Vegetation-lined channels shall have bottom slope gradients of 6% or less and a maximum velocity at max design flow of 5 fps. Refer to Table 4.2.
- Rock-lined channels or bank stabilization of natural channels shall be used when design flow velocities exceed 5 fps. Rock stabilization shall be in accordance with Table 4.1 or stabilized with bioengineering methods as described above in "Constructed Channels".
- See D4-05.3 for open channel setback information.
- Conveyance systems shall be sized to accommodate the peak runoff from a 100-year, 24-hour storm.

- Minimum freeboard requirements for open channels shall be one half (0.5) foot below the top of bank for the design flow rate.
- Hydrologic/hydraulic modeling to size facilities shall evaluate the channel roughness both immediately after construction and when vegetation is well established. Calculations and model output for both conditions shall be included in the Storm Drainage Report, per Chapter D2.
- Provide maintenance access for inspection and debris removal by conventional equipment. The type of equipment needing access is dependent on the size of channel. Large channels will need access for dump trucks and loaders. For small ditches, foot or pick-up truck access may suffice.

Table 4.2 Channel Protection

Velocity at Design Flow (fps)		REQUIRED PROTECTION		
Greater than	**Less than or equal to**	**Type of Protection**	**Thickness**	**Minimum Height Above Design Water Surface**
0	5	Vegetation lining, Grass lining, Or Bioengineered lining	N/A	
5	8	Rock lining(1) Or Bioengineered lining	1 foot	1 foot
8	12	Riprap(2)	2 feet	2 feet
12	20	Engineered Scour Protection (3)	Varies	2 feet

(1) Rock Lining shall be reasonably well graded quarry spalls as follows:

Maximum stone size: 12 inches
Median stone size: 8 inches
Minimum stone size: 2 inches

(2) Riprap shall be reasonably well graded as follows:

Maximum stone size: 24 inches
Median stone size: 16 inches
Minimum stone size: 4 inches

(3) Engineered Scour Protection shall be designed by the Professional Engineer to prevent erosion at the give design velocity rates.

Note: Riprap sizing is governed by side slopes on channel, assumed to be approximately 3H:1V.

2. Riprap Design for Rock-Lined Channels[1]

When riprap is set, stones are placed on the channel sides and bottom to protect the underlying material from being eroded. Proper riprap design requires the determination of the median size of stone, the thickness of the riprap layer, the gradation of stone sizes, and the selection of angular stones that will interlock when placed. Research by the U.S. Army Corps of Engineers has provided criteria for selecting the median stone weight, W50 (Figure 4.1). If the riprap is to be used in a highly turbulent zone (such as downstream of a stilling basin, at sharp changes in channel geometry, etc.), the median stone W50 should be increased from 200% to 600% depending on the severity of the locally high turbulence. See Section D4-02 for design requirements relating to riprap used in culvert outfalls and other discharge locations.

[1] From a paper prepared by M. Schaefer, Dam Safety Section, Washington State Department of Ecology.

The thickness of the riprap layer should generally be twice the median stone diameter (D50) or at least that of the maximum stone. The riprap should have a reasonably well graded assortment of stone sizes within the following gradation:

$1.25 = D_{max}/D_{50} = 1.50$

$D_{15}/D_{50} = 0.50$

$D_{min}/D_{50} = 0.25$

Detailed design methodology may be found in the Corps publication EM 1110-02-1601, Engineering and Design – Hydraulic Design of Flood Control Channels. For a more detailed analysis and design procedure for riprap requiring water surface profiles and estimates of tractive force, refer to the paper by Maynord et al in Journal of Hydraulic Engineering (A.S.C.E.), July 1989.

3. Riprap Filter Design

Riprap should be underlain by a sand and gravel filter (or filter fabric) to keep the fine materials in the underlying channel bed from being washed through the voids in the riprap. Likewise, the filter material must be selected so that it is not washed through the voids in the riprap. Adequate filters can usually be provided by a reasonably well graded sand and gravel material where:

$D_{15} < 5d_{85}$

The variable d85 refers to the sieve opening through which 85% of the material being protected will pass, and D15 has the same interpretation for the filter material. A filter material with a D50 of 0.5 mm will protect any finer material including clay. Where very large riprap is used, it is sometimes necessary to use two filter layers between the material being protected and the riprap.

Example:

What riprap design should be used to protect a streambank at a level culvert outfall where the outfall velocities in the vicinity of the downstream toe are expected to be about 8 fps?

From Figure 4.1, W50 = 6.5 lbs, but since the downstream area below the outfall will be subjected to severe turbulence, increase W50 by 400% so that:

W50 = 26 lbs, D50 = 8.0 inches

The gradation of the riprap is shown in Figure 4.2, and the minimum thickness would be 1 foot (from Table 4.1); however, 16 inches to 24 inches of riprap thickness would provide some additional insurance that the riprap will function properly in this highly turbulent area.

Figure 4.2 shows that the gradation curve for ASTM C33, size number 57 coarse aggregate (used in concrete mixes), would meet the filter criteria. Applying the filter criteria to the coarse aggregate demonstrates that any underlying material whose gradation was coarser than that of a concrete sand would be protected.

Figure 4.1 Mean Channel Velocity Vs. Medium Stone Weight (W50) And Equivalent Stone Diameter

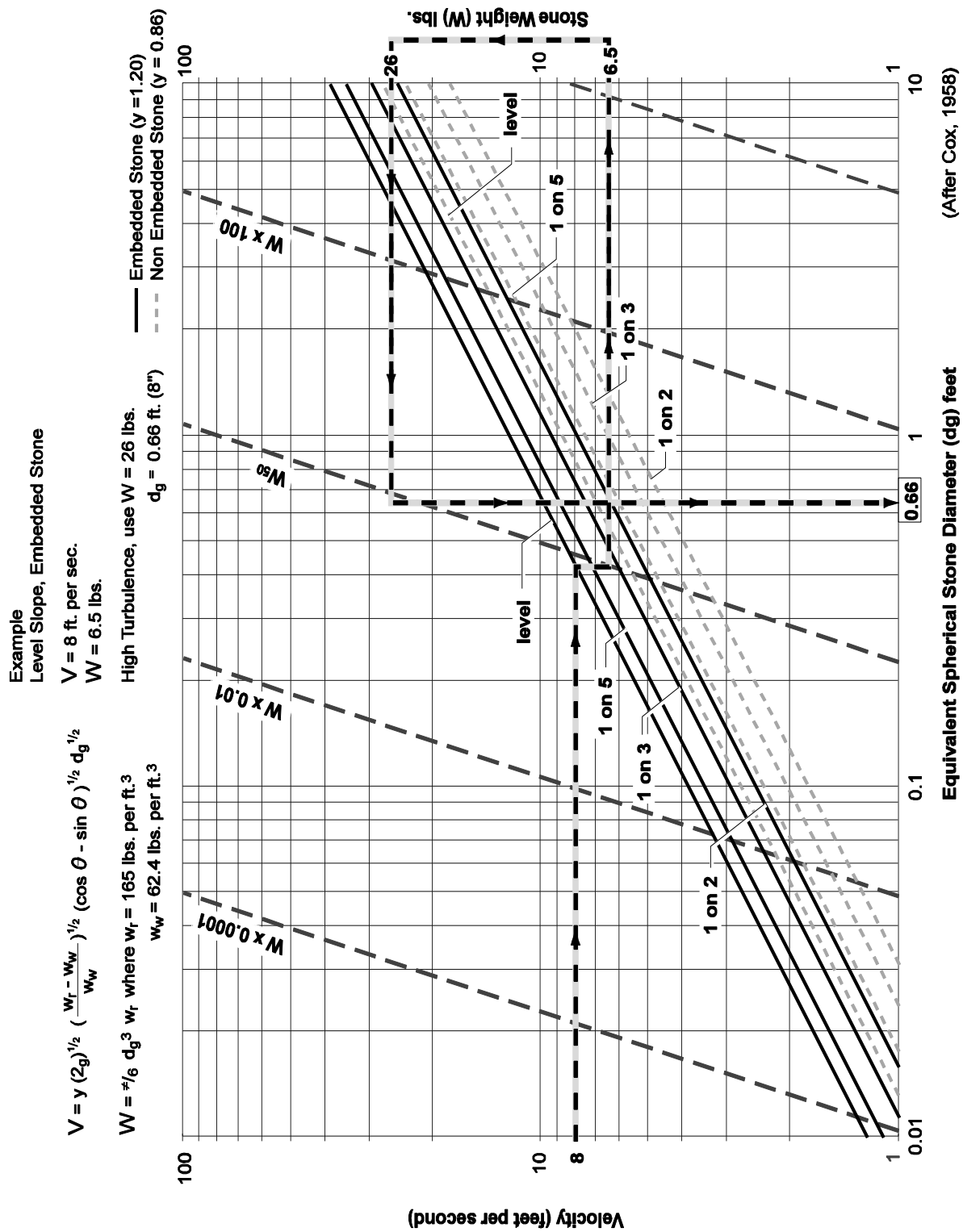

Figure 4.2 Riprap/Filter Example Gradation Curve

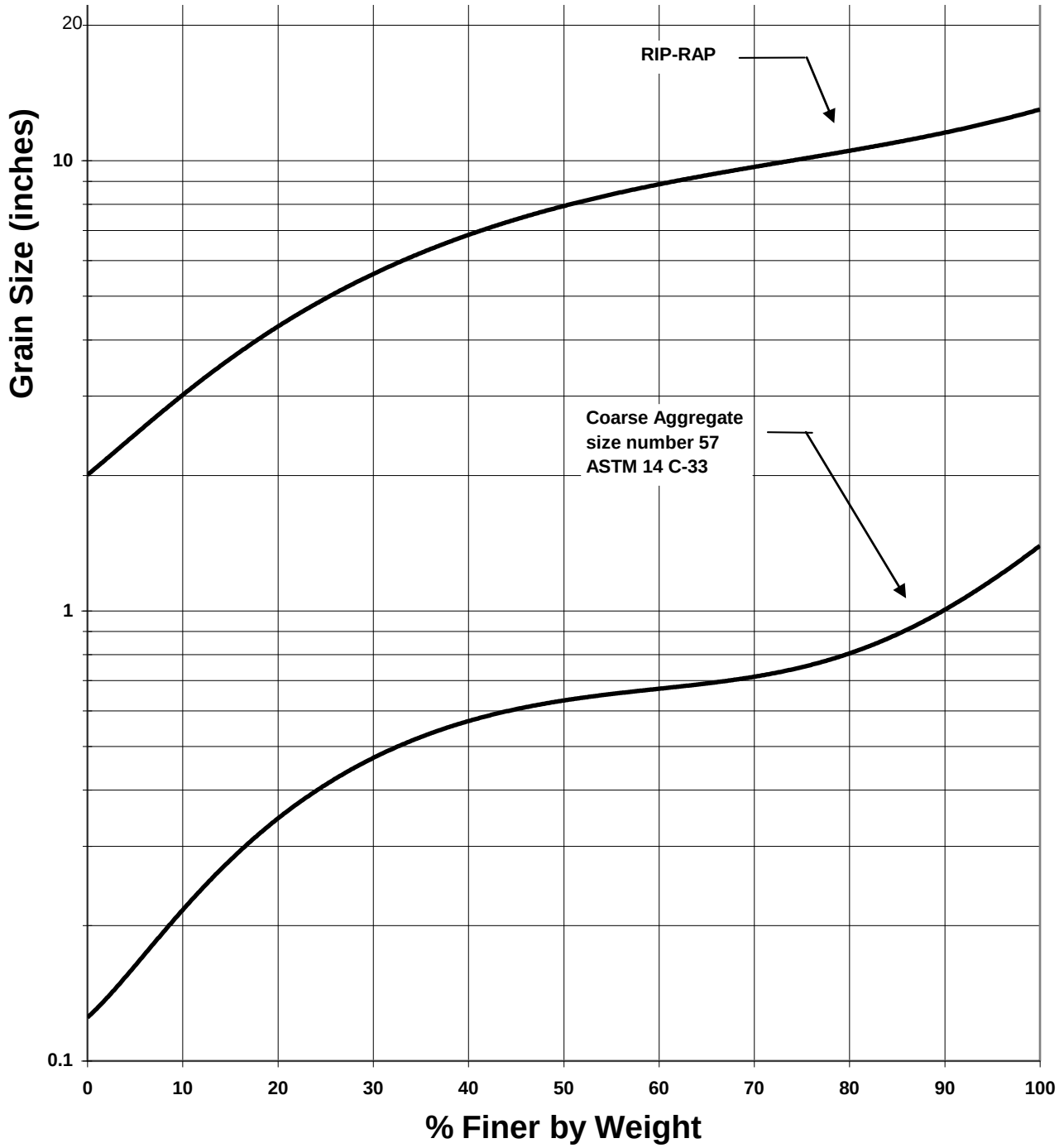

C. Methods of Analysis

Design Flows:

Design flows for sizing and assessing the capacity of open channels shall be determined using the hydrologic analysis methods described in Chapter D3. Flow control credits may not be used to reduce the required size of conveyance facilities.

Conveyance Capacity:

There are three acceptable methods of analysis for sizing and analyzing the capacity of open channels: Manning's equation for preliminary sizing, Direct Step backwater method, and Standard Step backwater method.

1. Manning's Equation for Preliminary Sizing

Manning's equation is used for preliminary sizing of open channel reaches of uniform cross section and slope (i.e., prismatic channels) and uniform roughness. This method assumes the flow depth (or normal depth) and flow velocity remain constant throughout the channel reach for a given flow.

The charts in Figure 4.3 and Figure 4.4 may be used to obtain graphic solutions of Manning's equation for common ditch sections. For conditions outside the range of these charts or for more precise results, Manning's equation can be solved directly from its classic forms shown in Equations 4.10 and 4.11.

Table 4.3 provides a reference for selecting the appropriate "n" values for open channels. A number of engineering reference books, such as Open-Channel Hydraulics by V.T. Chow, may also be used as guides to select "n" values. Figure 4.5 contains the geometric elements of common channel sections useful in determining area (A), wetted perimeter (WP), and hydraulic radius (R= A/WP). While the calculations may be most efficiently performed using a computer program, Figure 4.6 provides a template that can be used to aid manual calculation of open channel profiles.

If flow restrictions occur that raise the water level above normal depth within a given channel reach, a backwater condition (or subcritical flow) is said to exist. This condition can result from flow restrictions created by a downstream culvert, bridge, dam, pond, lake, etc., and even a downstream channel reach having a higher flow depth. If backwater conditions are found to exist for the design flow, a backwater profile must be computed to verify that the channel's capacity is still adequate as designed. The Direct Step or Standard Step backwater methods presented in this section may be used for this purpose.

Table 4.3 Values Roughness Coefficient "N" For Open Channels

Type of Channel and Description	Manning's "*n*"* (Normal)
A. Constructed Channels	
a. Earth, straight and uniform	
1. Clean, recently completed	0.018
2. Gravel, uniform section, clean	0.025
3. With short grass, few weeds	0.027
b. Earth, winding and sluggish	
1. No vegetation	0.025
2. Grass, some weeds	0.030
3. Dense weeds or aquatic plants in deep channels	0.035
4. Earth bottom and rubble sides	0.030
5. Stony bottom and weedy banks	0.035
6. Cobble bottom and clean sides	0.040
c. Rock lined	
1. Smooth and uniform	0.035
2. Jagged and irregular	0.040
d. Channels not maintained, weeds and brush uncut	
1. Dense weeds, high as flow depth	0.080
2. Clean bottom, brush on sides	0.050
3. Same as #2, highest stage of flow	0.070
4. Dense brush, high stage	0.100
B. Natural Streams	
B-1 Minor streams (top width at flood stage < 100 ft.)	
a. Streams on plain	0.030
1. Clean, straight, full stage no rifts or deep pools	0.035
2. Same as #1, but more stones and weeds	0.040
3. Clean, winding, some pools and shoals	0.040
4. Same as #3, but some weeds	0.050
5. Same as #4, but more stones	
6. Sluggish reaches, weedy deep pools	0.070
7. Very weedy reaches, deep pools, or floodways with heavy stand of timber and underbrush	0.100
b. Mountain streams, no vegetation in channel, banks usually steep, trees and brush along banks submerged at high stages	
1. Bottom: gravel, cobbles, and few boulders	0.040
2. Bottom: cobbles with large boulders	0.050
B-2 Floodplains	
a. Pasture, no brush	
1. Short grass	0.030
2. High grass	0.035
b. Cultivated areas	
1. No crop	0.030
2. Mature row crops	0.035
3. Mature field crops	0.040
c. Brush	
1. Scattered brush, heavy weeds	0.050
2. Light brush and trees	0.060
3. Medium to dense brush	0.070
4. Heavy, dense brush	0.100
d. Trees	
1. Dense willows, straight	0.150
2. Cleared land with tree stumps, no sprouts	0.040
3. Same as #2, but with heavy growth of sprouts	0.060
4. Heavy stand of timber, a few down trees, little undergrowth, flood stage below branches	0.100
5. Same as #4, but with flood stage reaching branches	0.120

* *Note:* These "n" values are "normal" values for use in analysis of channels. For conservative design of channel capacity, the maximum values listed in other references should be considered. For channel bank stability, the minimum values should be considered.

2. Direct Step Backwater Method

The Direct Step backwater method may be used to compute backwater profiles on prismatic channel reaches (i.e., reaches having uniform cross section and slope) where a backwater condition or restriction to normal flow is known to exist. The method may be applied to a series of prismatic channel reaches in secession beginning at the downstream end of the channel and computing the profile upstream.

Calculating the coordinates of the water surface profile using this method is an iterative process achieved by choosing a range of flow depths, beginning at the downstream end, and proceeding incrementally up to the point of interest or to the point of normal flow depth. This is best accomplished by the use of a computer program, such as HEC-RAS or EPA SWMM, but can also be done manually using a table (Figure 4.7). See additional discussion of recommended computer programs below.

To illustrate analysis of a single reach, consider the following diagram:

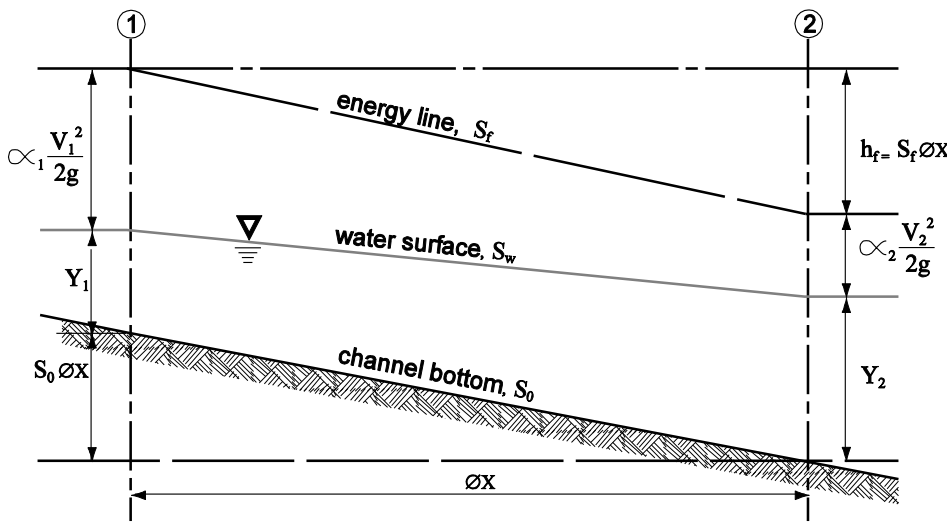

Equating the total head at cross sections 1 and 2, the following equation may be written:

$$S_o \Delta x + y_1 + \alpha_1 \frac{V_1^2}{2g} = y_2 + \alpha_2 \frac{V_2^2}{2g} + S_f \Delta x) \qquad (4\text{-}1)$$

where, Δx = distance between cross sections (ft)
y_1, y_2 = depth of flow (ft) at cross sections 1 and 2
V_1, V_2 = velocity (fps) at cross sections 1 and 2
α_1, α_2 = energy coefficient at cross sections 1 and 2
S_o = bottom slope (ft/ft)
S_f = friction slope = $(n^2V^2)/(2.21R^{1.33})$
g = acceleration due to gravity, (32.2 ft/sec^2)

If the specific energy E at any one cross section is defined as follows:

$$E = y + \alpha \frac{V^2}{2g} \tag{4-2}$$

and assuming $\alpha = \alpha_1 = \alpha_2$ where α is the energy coefficient that corrects for the non-uniform distribution of velocity over the channel cross section, Equations 4-1 and 4-2 can be combined and rearranged to solve for Δx as follows:

$$\Delta x = (E_2 - E_1)/(S_o - S_f) = \Delta E/(S_o - S_f) \tag{4-3}$$

Typical values of the energy coefficient α are as follows:

- Channels, regular section: 1.15
- Natural streams: 1.3
- Shallow vegetated flood fringes (includes channel): 1.75

For a given flow, channel slope, Manning's "*n*," and energy coefficient α, together with a beginning water surface elevation y_2, the values of Δx may be calculated for arbitrarily chosen values of y_1. The coordinates defining the water surface profile are obtained from the cumulative sum of Δx and corresponding values of y.

The normal flow depth, y_n, should first be calculated from Manning's equation to establish the upper limit of the backwater effect.

(3) Standard Step Backwater Method

The Standard Step Backwater Method is a variation of the Direct Step Backwater Method and may be used to compute backwater profiles on both prismatic and non-prismatic channels. In this method, stations are established along the channel where cross section data is known or has been determined through field survey. The computation is carried out in steps from station to station rather than throughout a given channel reach as is done in the Direct Step method. As a result, the analysis involves significantly more trial-and-error calculation in order to determine the flow depth at each station.

Computer Applications

Because of the iterative calculations involved, use of a computer to perform the analysis is recommended. The King County Backwater (KCBW) computer program included in the software package available with this manual includes a subroutine, BWCHAN, based on the Standard Step backwater method, which may be used for all channel capacity analysis. It can also be combined with the BWPIPE and BWCULV subroutines to analyze an entire drainage conveyance system. A schematic description of the nomenclature used in the BWCHAN subroutine is provided in Figure 4.8. See the KCBW program documentation for further information.

There are a number of commercial software programs for use on personal computers that use variations of the Standard Step backwater method for determining water surface profiles. The most common and widely accepted program for open channels is called HEC-RAS, published and supported by the United States Army Corps of Engineers Hydraulic Engineering Center. It is one

of the models accepted by FEMA for use in performing flood hazard studies for preparing flood insurance maps. Other acceptable hydraulic models would include national numeric models meeting the minimum requirements of the Nation Flood Insurance Program for hydraulic models for determining the water surface elevation for riverine analysis as listed on the FEMA website. The Professional Engineer is responsible for the appropriate application and accuracy of the results and is responsible for the proper selection of the model.

The Stormwater Management Model (SWMM) is another commercial software program used for hydrologic/hydraulic modeling of stormwater conveyance, on-site stormwater management, flow control, and treatment BMPs. This model uses direct step backwater method for determining water surface profiles in pipes.

Modeling reports must be included in the Storm Drainage Report (Chapter D2), which must be stamped and signed by the Professional Engineer.

Figure 4.3 Ditches - Common Sections

PROPERTIES OF DITCHES

NO.	DIMENSIONS				HYDRAULICS			
	Side Slopes	B	H	W	A	WP	R	$R^{(2/3)}$
D-1	--	--	6.5"	5'-0"	1.84	5.16	0.356	0.502
D-1C	--	--	6"	25'-0"	6.25	25.50	0.245	0.392
D-2A	1.5:1	2'-0"	1'-0"	5'-0"	3.50	5.61	0.624	0.731
B	2:1	2'-0"	1'-0"	6'-0"	4.00	6.47	0.618	0.726
C	3:1	2'-0"	1'-0"	8'-0"	5.00	8.32	0.601	0.712
D-3A	1.5:1	3'-0"	1'-6"	7'-6"	7.88	8.41	0.937	0.957
B	2:1	3'-0"	1'-6"	9'-0"	9.00	9.71	0.927	0.951
C	3:1	3'-0"	1'-6"	12'-0"	11.25	12.49	0.901	0.933
D-4A	1.5:1	3'-0"	2'-0"	9'-0"	12.00	10.21	1.175	1.114
B	2:1	3'-0"	2'-0"	11'-0"	14.00	11.94	1.172	1.112
C	3:1	3'-0"	2'-0"	15'-0"	18.00	15.65	1.150	1.098
D-5A	1.5:1	4'-0"	3'-0"	13'-0"	25.50	13.82	1.846	1.505
B	2:1	4'-0"	3'-0"	16'-0"	30.00	16.42	1.827	1.495
C	3:1	4'-0"	3'-0"	22'-0"	39.00	21.97	1.775	1.466
D-6A	2:1	--	1'-0"	4'-0"	2.00	4.47	0.447	0.585
B	3:1	--	1'-0"	6'-0"	3.00	6.32	0.474	0.608
D-7A	2:1	--	2'-0"	8'-0"	8.00	8.94	0.894	0.928
B	3:1	--	2'-0"	12'-0"	12.00	12.65	0.949	0.965
D-8A	2:1	--	3'-0"	12'-0"	18.00	13.42	1.342	1.216
B	3:1	--	3'-0"	18'-0"	27.00	18.97	1.423	1.265
D-9	7:1	--	1'-0"	14'-0"	7.00	14.14	0.495	0.626
D-10	7:1	--	2'-0"	28'-0"	28.00	28.28	0.990	0.993
D-11	7:1	--	3'-0"	42'-0"	63.00	42.43	1.485	1.302

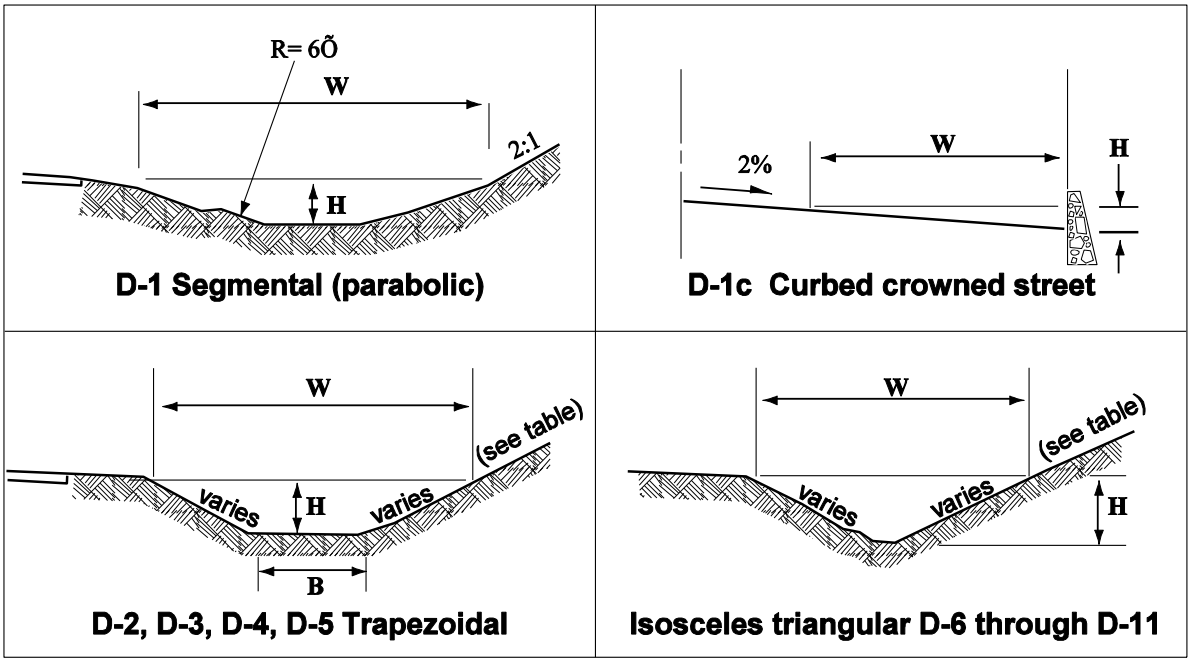

Figure 4.4 Drainage Ditches - Common Sections

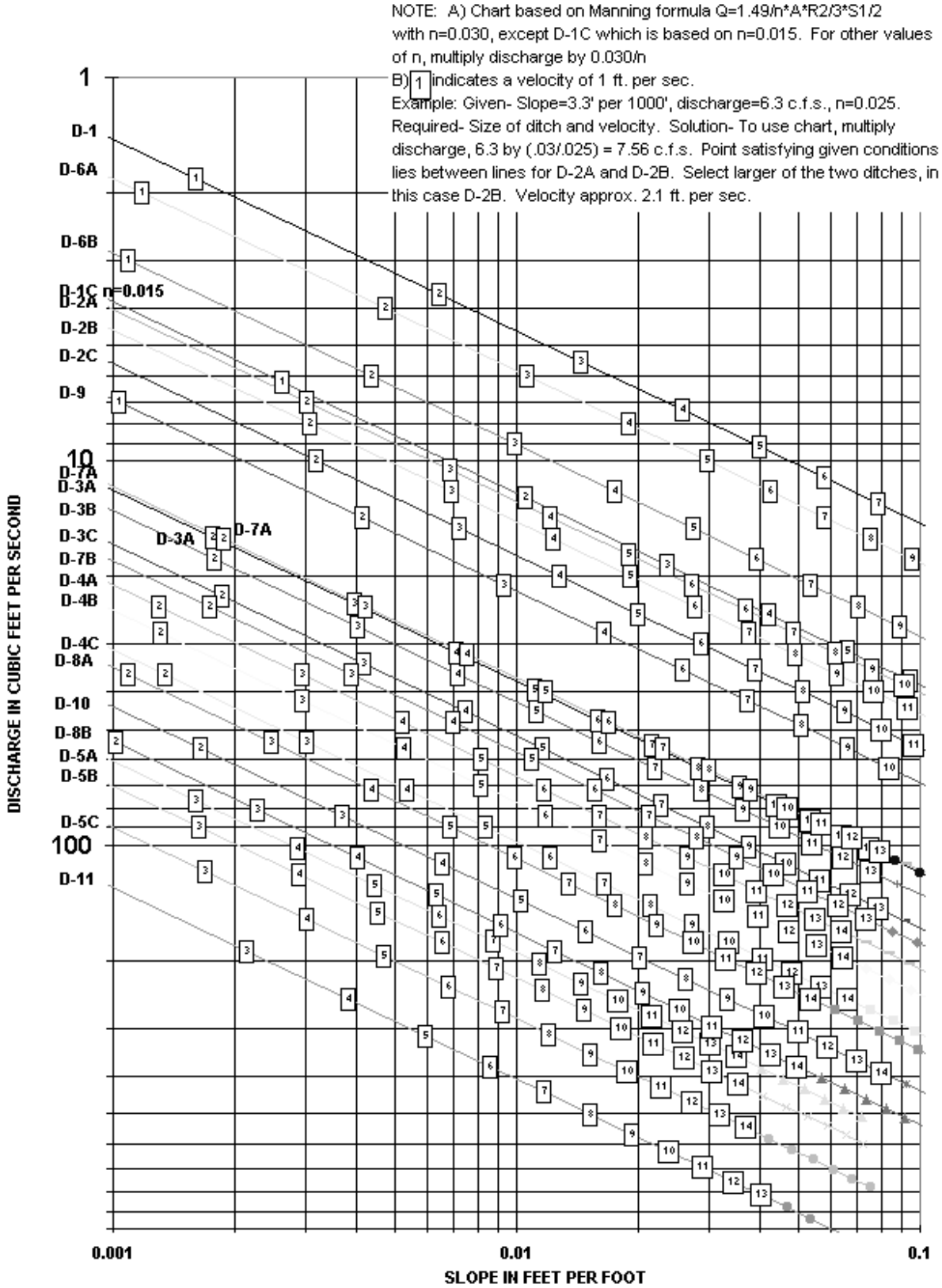

Figure 4.5 Geometric Elements Of Common Sections

Section	Area A	Wetted perimeter P	Hydraulic radius R	Top width W	Hydraulic depth D	Section factor Z
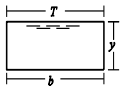 Rectangle	by	$b + 2y$	$\frac{by}{b + 2y}$	b	y	$by^{1.5}$
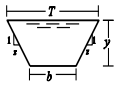 Trapezoid	$(b + zy)y$	$b + 2y\sqrt{1 + z^2}$	$\frac{(b + zy)y}{b + 2y\sqrt{1 + z^2}}$	$b + 2zy$	$\frac{(b + zy)y}{b + 2zy}$	$\frac{[(b + zy)y]^{1.5}}{\sqrt{b + 2zy}}$
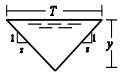 Triangle	zy^2	$2y\sqrt{1 + z^2}$	$\frac{zy}{2\sqrt{1 + z^2}}$	$2zy$	$\frac{1}{2}y$	$\frac{\sqrt{2}}{2}zy^{2.5}$
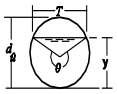 Circle	$\frac{1}{8}(\theta - \sin\theta)d_{\hat{u}}^2$	$\frac{1}{2}\theta d_{\hat{u}}$	$\frac{1}{4}\left(1 - \frac{\sin\theta}{\theta}\right)d_{\hat{u}}$	$(\sin(\frac{1}{2}\theta)d_{\hat{u}})$ or $2\sqrt{y(d_{\hat{u}} - y)}$	$\frac{1}{8}\left(\frac{\theta - \sin\theta}{\sin\frac{1}{2}\theta}\right)d_{\hat{u}}$	$\frac{\sqrt{2}}{32}\frac{(\theta - \sin\theta)^{1.5}}{(\sin\frac{1}{2}\theta)^{0.5}}d_{\hat{u}}^{2.5}$
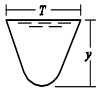 Parabola	$\frac{2}{3}Ty$	$T + \frac{8y^2}{3T}$ *	$\frac{2T^2y}{3T^2 + 8y^2}$ *	$\frac{3A}{2y}$	$\frac{2}{3}y$	$\frac{2}{9}\sqrt{6}Ty^{1.5}$
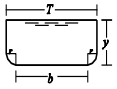 Round-cornered Rectangle ($y>r$)	$(\frac{\pi}{2} - 2)r^2 + (b + 2r)y$	$(\pi - 2)r + b + 2y$	$\frac{(\frac{\pi}{2} - 2)r^2 + (b + 2r)y}{(\pi - 2)r + b + 2y}$	$b + 2r$	$\frac{(\frac{\pi}{2} - 2)r^2}{(b + 2r)} + y$	$\frac{[(\frac{\pi}{2} - 2)r^2 + (b + 2r)y]^{1.5}}{\sqrt{b + 2y}}$
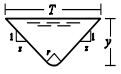 Round-bottomed Triangle	$\frac{T^2}{4z} - \frac{r^2}{z}(1 - z\cot^{-1}z)$	$\frac{T}{z}\sqrt{1 + z^2} - \frac{2r}{z}(1 - z\cot^{-1}z)$	$\frac{A}{P}$	$2[z(y - r) + r\sqrt{1 + z^2}]$	$\frac{A}{T}$	$A\sqrt{\frac{A}{T}}$

*Satisfactory approximation for the interval 0<x″1, where x=4y/T. When x>1, use the exact expression $P = (T/2)\left[\sqrt{1 + x^2} + \frac{1}{x}\ln\left(x + \sqrt{1 + x^2}\right)\right]$

Figure 4.6 Open Channel Flow Profile Computation

Q = _____ n = _____ S_o = _____ α = _____ Y_n = _____

y (1)	A (2)	R (3)	$R^{4/3}$ (4)	V (5)	$\alpha V^2/2g$ (6)	E (7)	ΔE (8)	S_f (9)	$\bar{S}_f$ (10)	$S_o - \bar{S}_f$ (11)	Δx (12)	x (13)

Figure 4.7 Direct Step Backwater Method - Example

y (1)	A (2)	R (3)	$R^{4/3}$ (4)	V (5)	$\alpha V^2/2g$ (6)	E (7)	ΔE (8)	S_f (9)	$\bar{S}_f$ (10)	$S_o - \bar{S}_f$ (11)	Δx (12)	x (13)
6.0	72.0	2.68	3.72	0.42	0.0031	6.0031	-	0.00002	-	-	-	-
5.5	60.5	2.46	3.31	0.50	0.0040	5.5040	0.4990	0.00003	0.000025	0.00698	71.50	71.5
5.0	50.0	2.24	2.92	0.60	0.0064	5.0064	0.4976	0.00005	0.000040	0.00696	71.49	142.99
4.5	40.5	2.01	2.54	0.74	0.0098	4.5098	0.4966	0.00009	0.000070	0.00693	71.64	214.63
4.0	32.0	1.79	2.17	0.94	0.0157	4.0157	0.4941	0.00016	0.000127	0.00687	71.89	286.52
3.5	24.5	1.57	1.82	1.22	0.0268	3.5268	0.4889	0.00033	0.000246	0.00675	72.38	358.90
3.0	18.0	1.34	1.48	1.67	0.0496	3.0496	0.4772	0.00076	0.000547	0.00645	73.95	432.85
2.5	12.5	1.12	1.16	2.40	0.1029	2.6029	0.4467	0.00201	0.001387	0.00561	79.58	512.43
2.0	8.0	0.89	0.86	3.75	0.2511	2.2511	0.3518	0.00663	0.004320	0.00268	131.27	643.70

The step computations are carried out as shown in the above table. The values in each column of the table are explained as follows:

Col. 1. Depth of flow (ft) assigned from 6 to 2 feet

Col. 2. Water area (ft^2) corresponding to depth y in Col. 1

Col. 3 Hydraulic radius (ft) corresponding to y in Col. 1

Col. 4. Four-thirds power of the hydraulic radius

Col. 5. Mean velocity (fps) obtained by dividing Q (30 cfs) by the water area in Col. 2

Col. 6. Velocity head (ft)

Col. 7. Specific energy (ft) obtained by adding the velocity head in Col. 6 to depth of flow in Col. 1

Col. 8. Change of specific energy (ft) equal to the difference between the E value in Col. 7 and that of the previous step.

Col. 9. Friction slope S_f, computed from V as given in Col. 5 and $R^{4/3}$ in Col. 4

Col.10. Average friction slope between the steps, equal to the arithmetic mean of the friction slope just computed in Col. 9 and that of the previous step

Col.11. Difference between the bottom slope, S_o, and the average friction slope, S_f

Col.12. Length of the reach (ft) between the consecutive steps; computed by

$\Delta x = \Delta E/(S_o - S_f)$ or by dividing the value in Col. 8 by the value in Col. 11

Col.13. Distance from the beginning point to the section under consideration. This is equal to the cumulative sum of the values in Col. 12 computed for previous steps.

Figure 4.8 BWCHAN Computer Subroutine – Variable Definitions

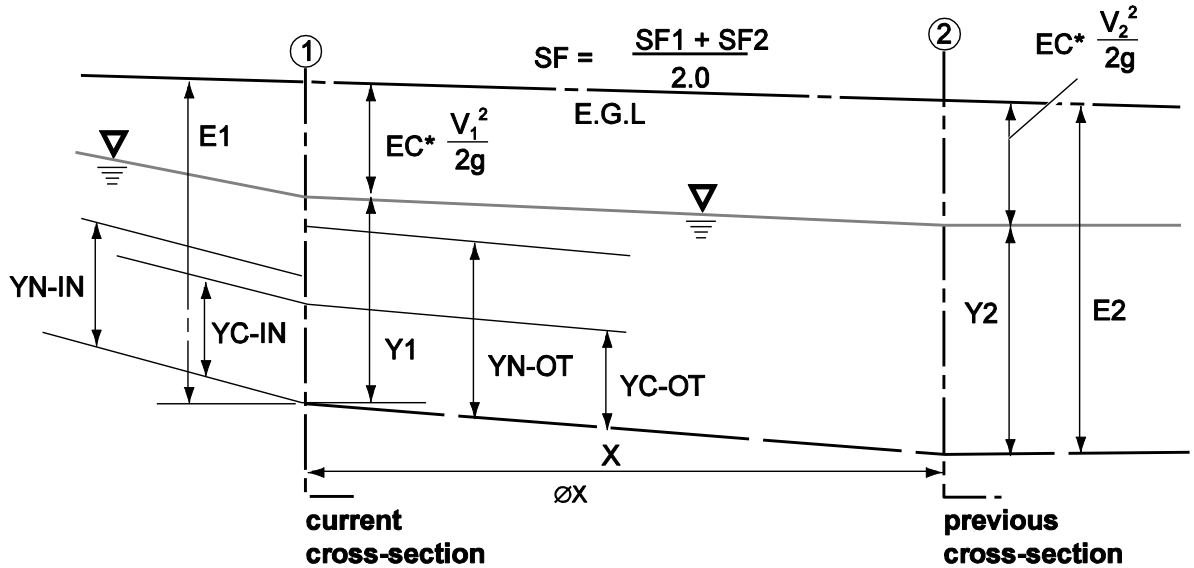

BWCHAN – VARIABLE DEFINITIONS

YC-IN	Critical Depth (ft) at current section based on incoming flow rate.
YC-OUT	Critical Depth (ft) at current section based on outgoing flow rate.
YN-IN	Normal Depth (ft) at current section based on incoming flow rate/channel grade.
YN-OUT	Normal Depth (ft) at current section based on outgoing flow rate/channel grade.
Y1	Final Water Depth (ft) at current cross section
N-Y1	Composite n-factor of current section for final depth, Y1.
A-Y1	Cross-sectional Area of current section for final depth, Y1.
WP-Y1	Wetted Perimeter (ft) of current section for final depth, Y1.
V-Y1	Average Velocity (fps) of current section for final depth, Y1.
E1	Total Energy Head (ft) at current section $\left(Y1 + EC * V_1^2 / 2g\right)$
E2	Total Energy Head (ft) at pervious or downstream section.
SF1	Friction Slope of current section.
SF2	Friction Slope of previous or downstream section.
DXY	Distance (expressed as a fraction of the current reach length) from the previous or downstream section to where the flow profile would intersect the final water depth, Y1, assuming Y1 were to remain constant
EC	Energy Coefficient "α"
Q-TW	The flow rate used to determine Tailwater Height from an inputted HW/TW Data File.

TW-HT	Tailwater Height.
Q-Y1	Flow rate (cfs) in channel at current section, for depth, Y1
VU-Y1	Upstream Velocity (fps) at current section for depth, Y1 ("Adjust" option).
V1-HD	Channel Velocity Head (ft) at current section.
VU-HD	Upstream Velocity Head (ft) at current section.

D4-05.5 Floodplain/Floodway Analysis

The methods and criteria below have been adapted from the 2016 King County Surface Water Design Manual.

A. General

Floodplain/floodway studies establish base flood elevations and delineate floodplains and/or floodways when Bellevue's Development Services Department determines that a proposed project contains or is adjacent to a flood hazard area for a river, stream, lake, wetland, closed depression, or other water feature. Furthermore, when development is proposed within the floodplain, the floodplain/floodway study is used to show compliance with the critical areas code (BCC 20.25H.175) flood hazard area regulations.

There are four conditions affecting the requirements for floodplain/floodway studies. Each condition is considered a threshold for determining the type of studies required and the documentation needed to meet the study requirements. Each study threshold and related study requirements are shown in the table below, and described further in this section.

Table 4.4 Floodplain/Floodway Study Thresholds And Requirements

Threshold	Study	Requirements
The project site is on land that is outside of an already delineated floodplain and above the floodplain's base flood elevation based on best available floodplain data determined in accordance with BCC 20.25H.175 and associated public rule.	No floodplain study required	• Show delineation of floodplain on the site improvement plan and indicate base flood elevation See Section D4-05.5 B for more details
The project site is on land that is at least 10 vertical feet above the ordinary high water mark or 2 feet above the downstream overflow elevation of a water feature for which a floodplain has not been determined in accordance with BCC 20.25H.175.	Approximate Floodplain Study per Section D4-04.5 C	• Submit an engineering plan with approximate base flood elevation See further requirements in Section D4-05.5 C
The project site does not meet the above thresholds and is either on land that is outside of an already delineated Zone A floodplain (i.e., without base flood elevations determined), or is adjacent to a water feature for which a floodplain has not been determined in accordance with BCC 20.25H.175.	Minor Floodplain Study per Section D4-04.5 D.	• Backwater model • Submit an engineering plan with determined base flood elevation See further requirements in Section D4-05.5 D
The project site is on land that is partially or fully within an already delineated floodplain of a river or stream, or is determined by a Minor Floodplain Study to be partially or fully within the floodplain of a river or stream.	Major Floodplain/Floodway Study per Section D4-04.5 E	• Show mapped floodplain/floodway on the site improvement plan and indicate base flood elevation • See further requirements in Section D4-05.5 E.

B. No Floodplain Study Required

If the proposed project site is on land that is outside of an already delineated floodplain and is above the already determined base flood elevation for that floodplain, based on best available floodplain data determined in accordance with BCC20.25H.175 and associated public rule, then no floodplain study is required.

In this situation, if the already determined floodplain covers any portion of the site, the boundary of that floodplain and its base flood elevation must be shown on the project's site improvement plan.

C. Approximate Floodplain Study

If the proposed project site is on land that is at least 10 feet above the ordinary high water mark or 2 feet above the downstream overflow elevation of a water feature for which the floodplain has not been delineated in accordance with BCC20.25H.175, then an Approximate Floodplain Study may be used to determine an approximate floodplain and base flood elevation.

The intent of the Approximate Floodplain Study is to reduce required analysis in those situations where the project site is adjacent to a flood hazard area, but by virtue of significant topographical relief, is clearly in no danger of flooding. The minimum 10 vertical feet of separation from ordinary high water reduces the level of required analysis for those projects adjacent to streams confined to deep channels or ravines, or near lakes or wetlands. The minimum 2 feet clearance above the downstream overflow elevation is intended to avoid flood hazard areas created by a downstream impoundment of water behind a road fill or in a lake, wetland, or closed depression.

Use of the Approximate Floodplain Study requires submittal of an engineering plan showing the proposed project site is at least 10 feet above the ordinary high water elevation of the water feature in question, or at least 2 feet above the downstream overflow elevation of the water feature, whichever is less, subject to the following conditions:

1. The design engineer preparing the engineering plan shall determine an approximate base flood elevation and include a narrative describing his/her level of confidence in the approximate base flood elevation. The base flood elevation shall include calculations of Normal Depth for Uniform Flow, as documented in Chow, V.T. (1959). The narrative must include, but is not limited to, an assessment of potential backwater effects (such as might result from nearby river flooding, for example); observations and/or anecdotal information on water surface elevations during previous flood events; and an assessment of potential for significantly higher future flows at basin build out. *Note:* Many of these issues will have been addressed in a Level 1 downstream analysis, if required. Acceptance of the approximate base flood elevation shall be at the sole discretion of The Utility. If the approximate base flood elevation is not acceptable, a Minor Floodplain Study or Major Floodplain/Floodway Study may be required.
2. That portion of the site that is at or below the calculated base flood elevation must be delineated and designated as a floodplain on the engineering plan.

D. Minor Floodplain Study

If the proposed project site does not meet the conditions for "no floodplain study required" per Section D4-05.5(B) or for use of the Approximate Floodplain Study per Section D4-05.5(C), and the project site is either on land that is outside of an already delineated Zone A floodplain (i.e., without base flood elevations determined) or is adjacent to a water feature for which a floodplain has not been determined in accordance with BCC 20.25H.175, then a Minor Floodplain Study may be used to determine the floodplain. However, if the Minor Floodplain Study determines that all or a portion of the project site is at or below the base flood elevation of a river or stream and thus within the floodplain, then the Developer must either redesign the project site to be out of the floodplain or complete a Major Floodplain/Floodway Study per Section D4-05.5(E).

Use of the Minor Floodplain Study requires submittal of an engineering plan and supporting calculations. That portion of the site that is at or below the determined base flood elevation must be delineated and designated as a floodplain on the engineering plan.

Methods of Analysis

For streams without a floodplain or flood hazard study, or for drainage ditches or culvert headwaters, the base flood elevation and extent of the floodplain shall be determined using the Direct Step backwater method, Standard Step backwater method, or the King County Backwater computer program, as described in Section D4-05.4(C).

For lakes, wetlands, and closed depressions without an approved floodplain or flood hazard study, the base flood elevation and the extent of the floodplain shall be determined using the "point of compliance technique" as defined in the 2016 King County Surface Water Design Manual, Section 3.3.6.

E. Major Floodplain/Floodway Study

If the proposed project site is on land that is partially or fully within an already delineated floodplain of a river or stream, or determined by a Minor Floodplain Study to be partially or fully within the floodplain of a river or stream, then a Major Floodplain/Floodway Study is required to determine the floodplain, floodway, and base flood elevation in accordance with the methods and procedures presented in this section. This information will be used by to evaluate the project's compliance with the regulations specified in BCC 20.25H.175 for development or improvements within the floodplain.

Major Floodplain/Floodway Studies must conform to FEMA regulations described in Part 65 of 44 Code of Federal Regulations (CFR). In addition, the following information must be provided and procedures performed.

Information Required

The Developer shall submit the following information for review of a floodplain/floodway analysis in addition to that required for the drainage plan of a proposed project. This analysis shall extend upstream and downstream a sufficient distance to adequately include all backwater conditions that may affect flooding at the ***site*** and all reaches that may be affected by alterations to the site.

Floodplain/Floodway Map

A Major Floodplain/Floodway Study requires submittal of five copies of a separate floodplain/floodway map stamped by a licensed civil engineer and a professional land surveyor registered in the State of Washington (for the base survey). The map must accurately locate any proposed development with respect to the floodplain and floodway, the channel of the stream, and existing development in the floodplain; it must also supply all pertinent information such as the nature of any proposed project, legal description of the property on which the project would be located, fill quantity, limits and elevation, the building floor elevations, flood-proofing measures, and any use of compensatory storage.

The map must show elevation contours at a minimum of 2-foot vertical intervals and shall comply with survey and map guidelines published in the FEMA publication *Guidelines and Specifications for Flood Hazard Mapping Partners*. The map must show the following:

- Existing elevations and ground contours;
- Locations, elevations and dimensions of existing structures, and fills;
- Size, location, elevation, and spatial arrangement of all proposed structures, fills and excavations, including proposed compensatory storage areas, with final grades on the site;
- Location and elevations of roadways, water supply lines, and sanitary sewer facilities, both existing and proposed.

Study Report

A Major Floodplain/Floodway Study also requires submittal of two copies of a study report, stamped by a licensed civil engineer, which must include calculations or any computer analysis input and output information as well as the following additional information:

- Valley cross sections showing the channel of the river or stream, the floodplain adjoining each side of the channel, the computed FEMA floodway, the cross-sectional area to be occupied by any proposed development, and all historic high water information.
- Profiles showing the bottom of the channel, the top of both left and right banks, and existing and proposed base flood water surfaces.
- Plans and specifications for flood-proofing any structures and fills, construction areas, materials storage areas, water supply, and sanitary facilities within the floodplain.
- Complete printout of input and output (including any error messages) for HEC-RAS. Liberal use of comments will assist in understanding model logic and prevent review delays.
- One ready-to-run digital copy of the HEC-RAS input file used in the study. Data shall be submitted on a disk in Windows format.

The Developer shall prepare a written summary describing the model development calibration, hydraulic analysis, and floodway delineation. The summary shall also include an explanation of modeling assumptions and any key uncertainties.

Determining Flood Flows

One of two techniques are used to determine the flows used in the analysis, depending on available information as determined by the Utilities Department Engineering Division. The first technique is for basins in adopted basin plan areas. The second technique is used on catchments without gauge data. In both cases, the design engineer shall be responsible for assuring that the hydrologic methods used are technically reasonable and conservative, conform to the *Guidelines and Specifications for Flood Hazard Mapping Partners*, and are acceptable by FEMA. Refer to Table 3.1 in Chapter D3 - Hydrologic Analysis for allowable models.

Flood Flows from Adopted Basin Plan Information

For those areas with a basin plan prepared since 1986, flood flows shall be determined using information from the adopted basin plan. Consult with Utilities Department Engineering Division for more information. The hydrologic model used in the basin plan shall be updated to include the latest changes in zoning, or any additional information regarding the basin that has been acquired since the adoption of the basin plan.

Flood Flows from a Calibrated Continuous Model

Flood flows may be determined by utilizing a continuous flow simulation model such as HSPF. Where flood elevations or stream gage data are available, the model shall be calibrated; otherwise, regional parameters may be used. Consult Utilities Department Engineering Division for available data and guidance.

Determining Flood Elevations, Profiles, and Floodway Reconnaissance

The Developer’s design engineer is responsible for the collection of all existing data with regard to flooding in the study area. This shall include a literature search of all published reports in the

study area and adjacent communities, and an information search to obtain all unpublished information on flooding in the immediate and adjacent areas from federal, state, and local units of government. This search shall include specific information on past flooding in the area, drainage structures such as bridges and culverts that affect flooding in the area, available topographic maps, available flood insurance rate maps, photographs of past flood events, and general flooding problems within the study area. A field reconnaissance shall be made by the Professional Engineer to determine hydraulic conditions of the study area, including type and number of structures, locations of cross sections, and other parameters, including the roughness values necessary for the hydraulic analysis.

Base Data

Cross sections used in the hydraulic analysis shall be representative of current channel and floodplain conditions obtained by surveying. When cross-sections data is obtained from other studies, the data shall be confirmed to represent current channel and floodplain conditions, or new channel cross-section data shall be obtained by field survey. Topographic information obtained from aerial photographs may be used in combination with surveyed cross sections in the hydraulic analysis. The elevation datum of all information used in the hydraulic analysis shall be specified. All information shall be referenced directly to NAVD 1988 (and include local correlation to NGVD 1929) unless otherwise approved by The Utility. See Table 4.5 for correlations of other datum to NAVD 1988.

Methodology

Flood profiles and floodway studies shall be calculated using the U.S. Army Corps of Engineers' HEC-RAS computer model (or subsequent revisions).

Floodway Determination

Bellevue recognizes two distinct floodway definitions. The FEMA floodway describes the limit to which encroachment into the natural conveyance channel can cause one foot or less rise in water surface elevation. The zero-rise floodway is based upon the limit to which encroachment can occur without any measurable increase in water surface elevation or energy grade line. Floodway determinations/studies are subject to the following requirements:

1. FEMA floodways are determined through the procedures outlined in the FEMA publication *Guidelines and Specifications for Flood Hazard Mapping Partners* using the 1-foot maximum allowable rise criteria.
2. Transitions shall take into account obstructions to flow such as road approach grades, bridges, piers, or other restrictions. General guidelines for transitions may be found in *FEMA Guidelines and Specifications for Flood Hazard Mapping Partners*, and the *HEC-RAS User's Manual, Hydraulic Reference Manual and Applications Guidelines*.
3. Zero-rise floodways are assumed to include the entire 100-year floodplain unless The Utility approves a detailed study that defines a zero-rise floodway.
4. Zero-rise means no measurable increase in water surface elevation or energy grade line. For changes between the unencroached condition and encroachment to the zero-rise floodway, HEC-RAS must report 0.00 as both the change in water surface elevation and the change in energy grade. HEC-RAS must further report the exact same elevations for both the computed water surface and energy grade line.

5. Floodway studies must reflect the transitions mentioned in Requirement 2 above. FEMA floodway boundaries are to follow stream lines, and should reasonably balance the rights of property owners on either side of the floodway. Use of the "automatic equal conveyance encroachment options" in the HEC-RAS program will be considered equitable. Where HEC-RAS automatic options are otherwise not appropriate, the floodway must be placed to minimize the top width of the floodway.
6. Submittal of floodway studies for the Utility review must include an electronic copy of the HEC-RAS input and output files, printouts of these files, and a detailed written description of the modeling approach and findings.

Previous Floodplain Studies

If differences exist between a study previously approved by the Utility and the Developer's design engineer's calculated hydraulic floodways or flood profiles, the design engineer shall provide justification and obtain Utility approval for these differences.

Zero-Rise Calculation

For a zero-rise analysis, the flow profile for the existing and proposed site conditions shall be computed and reported to the nearest 0.01 foot. A zero-rise analysis requires only comparisons of the computed water surface elevations and energy grade lines for the existing and proposed conditions. Such comparisons are independent of natural dynamics and are not limited by the accuracy of the model's absolute water surface predictions.

Adequacy of Hydraulic Model

At a minimum, the Utility considers the following factors when determining the adequacy of the hydraulic model and flow profiles for use in floodway analysis:

- Cross section spacing
- Differences in energy grade
- *Note:* Significant differences in the energy grade from cross section to cross section are an indication that cross sections should be more closely spaced or that other inaccuracies exist in the hydraulic model.
- Methods for analyzing the hydraulics of structures such as bridges and culverts
- Lack of flow continuity
- Use of a gradually-varied flow model

Note: In certain circumstances (such as weir flow over a levee or dike, flow through the spillway of a dam, or special applications of bridge flow), rapidly-varied flow techniques shall be used in combination with a gradually-varied flow model.

Manning's "*n*" values

Calibration of the hydraulic model with past flood events

Special applications: In some cases, HEC-RAS alone may not be sufficient for preparing the floodplain/floodway analysis. This may occur where sediment transport, two-dimensional flow, or other unique hydraulic circumstances affect the accuracy of the HEC-RAS hydraulic model. In

these cases, the Developer shall obtain Utility approval of other methods proposed for estimating the water surface profiles.

Table 4.5 Datum Correlations

Correlation From → To	NAVD 1988	KCAS	U.S. Engineers	City of Seattle	NGVD, USGS & USC & GS 1947	Seattle Area Tide Tables & Navigation Charts 1954 & Later
NAVD 1988	--	-3.58	3.22	-9.54	-3.49	2.98
KCAS	3.58	--	7.02	-5.96	0.09	6.56
U.S. Engineers	-3.44	-7.02	--	-12.98	-6.93	-0.46
City of Seattle	9.54	5.96	12.98	--	6.05	12.52
-NGVD, USGS & USC& GS 1947 (adjusted to the 1929 datum)	3.49	-0.09	6.93	-6.05	--	6.47
Seattle Area Tide Tables & Navigation Charts 1954 & Later (based on epoch 1924-1942)	-2.98	-6.56	0.46	-12.52	-6.47	--
Design Tidal Tailwater Elevation	12.08	8.50	15.52	2.54	8.59	15.06
Mean Higher High Water (MHHW)	8.34	4.76	11.78	-1.20	4.85	11.32
Mean High Water (MHW)	7.49	3.91	10.93	-2.05	4.00	10.47
Mean Low Water (MLW)	-0.16	-3.74	3.28	-9.70	-3.65	2.82
Mean Lower Low Water (MLLW)	-2.98	-6.56	0.46	-12.52	-6.47	0.00

KCAS datum = Sea Level Datum 1929 (a.k.a. NGVD 1929)

D4-05.6 Bridges

A. Hydraulic Criteria - Bridges

Bridges shall conform to Hydraulic Code Section WAC 220-110-070 and Land Use Code Section 20.25(H) 110A.

B. Freeboard Requirements - Bridges

The water surface elevation for the 100-year storm shall be a least one (1) foot below the lowest bridge girder to allow for the passage of floating debris.

D4-05.7 Culverts

A. Hydraulic Criteria - Culverts

When an abrasive bed load is anticipated or when velocities exceed 10 fps, protective measures shall be implemented to minimize pipe damage.

When a culvert is approved by the City in lieu of a bridge per Section 20.25(H) l10A of the Land Use Code, such culverts shall:

- span the bank full width of the channel;
- be lined with bed material that is similar to the adjacent channel bed
- have a slope similar to the existing channel;
- have sufficient capacity to pass the 100- year design storm; and meet the Washington State Hydraulic Code Rules.

B. Manning "n" values

For culverts, use the factors set forth in Table 4.9 of these Standards.

C. Design Flow Rate

Conveyance systems shall be sized to accommodate the peak runoff from a 100-year storm.

D. Freeboard Requirements - Culverts

For Type S and F streams, the water surface elevation for the 100-year storm shall be at least one (1) foot below the crown of the culvert to allow for the passage of floating debris.

E. Minimum Diameter, Slope, and Velocity

The minimum diameter of any driveway culvert shall be 12-inches. Where minimum cover requirements can be met, a minimum 18-inch diameter culvert shall be used to minimize debris blockages.

Headwalls, cut-off walls, and/or anti-seep collars shall be provided on culverts where the hydraulic piping of bedding and backfill materials is possible.

F. Energy Dissipation

When discharging to an existing ditch, swale, or stream, energy dissipation is required to avoid erosion. Design energy dissipation measures pursuant to Section D4-02.

G. Maintenance Access

Provide maintenance access to the upstream and downstream ends of the culvert for inspection and debris removal.

H. Design Criteria

Headwater

For culverts 18-inch diameter or less, the maximum allowable headwater elevation (measured from the inlet invert) shall not exceed 2 times the pipe diameter or arch-culvert-rise at design flow (i.e., the 100-year, 24-hr peak flow rate).

For culverts larger than 18-inch diameter, the maximum allowable design flow headwater elevation (measured from the inlet invert) shall not exceed 1.5 times the pipe diameter or arch-culvert-rise at design flow.

The maximum headwater elevation at design flow shall be 1 foot or more below any road or parking lot subgrade.

Inlets and Outlets

(1) All inlets and outlets in or near roadway embankments must be flush with and conforming to the slope of the embankment.

(2) For culverts 18-inch diameter and larger, the embankment around the culvert inlet shall be protected from erosion by rock lining or riprap as specified in Table 4.1, except the length shall extend at least 5 feet upstream of the culvert, and the height shall be at or above the design headwater elevation.

(3) Inlet structures, such as concrete headwalls, may provide a more economical design by allowing the use of smaller entrance coefficients and, hence, smaller diameter culverts. When properly designed, they will also protect the embankment from erosion and eliminate the need for rock lining.

(4) In order to maintain the stability of roadway embankments, concrete headwalls, wingwalls, or tapered inlets and outlets may be required if right-of-way or easement constraints prohibit the culvert from extending to the toe of the embankment slopes. All inlet structures or headwalls installed in or near roadway embankments must be flush with and conforming to the slope of the embankment.

(5) Debris barriers (trash racks) are generally not required on the inlets of all culverts except as specified by the Utility.

(6) For culverts 18-inch diameter and larger, the receiving channel of the outlet shall be protected from erosion by rock lining specified in Table 4.1, except the height shall be one foot above maximum tailwater elevation or one foot above the crown, whichever is higher (Refer to the King County Stormwater Design Manual, Figure 4.2.2.A Pipe/Culvert Discharge Protection).

I. Methods of Analysis

Conveyance Capacity

The theoretical analysis of culvert capacity can be extremely complex because of the wide range of possible flow conditions that can occur due to various combinations of inlet and outlet

submergence and flow regime within the culvert barrel. An exact analysis usually involves detailed backwater calculations, energy and momentum balance, and application of the results of hydraulic model studies.

However, simple procedures have been developed where the various flow conditions are classified and analyzed on the basis of a control section. A control section is a location where there is a unique relationship between the flow rate and the upstream water surface elevation. Many different flow conditions exist over time, but at any given time the flow is either governed by the culvert's inlet geometry (inlet control) or by a combination of inlet geometry, barrel characteristics, and tailwater elevation (outlet control). Figure 4.9 illustrates typical conditions of inlet and outlet control. The procedures presented in this section provide for the analysis of both inlet and outlet control conditions to determine which governs.

Inlet Control Analysis

Nomographs such as those provided in Figure 4.10 and Figure 4.11 may be used to determine the inlet control headwater depth at design flow for various types of culverts and inlet configurations. These nomographs were originally developed by the Bureau of Public Roads—now the Federal Highway Administration (FHWA)—based on their studies of culvert hydraulics. These and other nomographs can be found in the FHWA publication *Hydraulic Design of Highway Culverts, HDS No. #5* (Report No. FHWA-IP-85-15), September 1985; or the *WSDOT Hydraulic Manual*.

Also available in the FHWA publication, are the design equations used to develop the inlet control nomographs. These equations are presented below.

For unsubmerged inlet conditions (defined by $Q/AD^{0.5} < 3.5$);

$$\text{Form 1*:}\quad HW/D = H_c/D + K(Q/AD^{0.5})^M - 0.5S^{**} \qquad (4\text{-}4)$$

$$\text{Form 2*:}\quad HW/D = K(Q/AD^{0.5})^M \qquad (4\text{-}5)$$

For submerged inlet conditions (defined by $Q/AD^{0.5} > 4.0$);

$$HW/D = c(Q/AD^{0.5})^2 + Y - 0.5S^{**} \qquad (4\text{-}6)$$

where HW = headwater depth above inlet invert (ft)

D = interior height of culvert barrel (ft)

H_c = specific head (ft) at critical depth ($dc + Vc_2/2g$)

Q = flow (cfs)

A = full cross-sectional area of culvert barrel (sf)

S = culvert barrel slope (ft/ft)

K,M,c,Y = constants from Table 4.6

The specified head H_c is determined by the following equation:

$$H_c = d_c + V_c^2/2g \qquad (4\text{-}7)$$

where d_c = critical depth (ft); refer to Figure 4.14

V_c = flow velocity at critical depth (fps)

g = acceleration due to gravity (32.2 ft/sec^2)

* The appropriate equation form for various inlet types is specified in Table 4.6.

** For mitered inlets, use +0.7S instead of -0.5S.

Note: Between the unsubmerged and submerged conditions, there is a transition zone ($3.5 < Q/AD^{0.5} < 4.0$) for which there is only limited hydraulic study information. The transition zone is defined empirically by drawing a curve between and tangent to the curves defined by the unsubmerged and submerged equations. In most cases, the transition zone is short and the curve is easily constructed.

Table 4.6 Constants For Inlet Control Equations

Shape and Material	Inlet Edge Description	Unsubmerged			Submerged	
		Equation Form	*K*	*M*	*c*	*Y*
Circular Concrete	Square edge with headwall	1	0.0098	2.0	0.0398	0.67
	Groove end with headwall		0.0078	2.0	0.0292	0.74
	Groove end projecting		0.0045	2.0	0.0317	0.69
Circular CMP	Headwall	1	0.0078	2.0	0.0379	0.69
	Mitered to slope		0.0210	1.33	0.0463	0.75
	Projecting		0.0340	1.50	0.0553	0.54
Rectangular Box	30° to 75° wingwall flares	1	0.026	1.0	0.0385	0.81
	90° and 15° wingwall flares		0.061	0.75	0.0400	0.80
	0° wingwall flares		0.061	0.75	0.0423	0.82
CM Boxes	90° headwall	1	0.0083	2.0	0.0379	0.69
	Thick wall projecting		0.0145	1.75	0.0419	0.64
	Thin wall projecting		0.0340	1.5	0.0496	0.57
Arch CMP	90° headwall	1	0.0083	2.0	0.0496	0.57
	Mitered to slope		0.0300	1.0	0.0463	0.75
	Projecting		0.0340	1.5	0.0496	0.53
Bottomless Arch CMP	90° headwall	1	0.0083	2.0	0.0379	0.69
	Mitered to slope		0.0300	2.0	0.0463	0.75
	Thin wall projecting		0.0340	1.5	0.0496	0.57
Circular with Tapered Inlet	Smooth tapered inlet throat	2	0.534	0.333	0.0196	0.89
	Rough tapered inlet throat		0.519	0.64	0.0289	0.90

* Source: *FHWA HDS No. 5*

Outlet Control Analysis

Nomographs such as those provided in Figure 4.12 and Figure 4.13 may be used to determine the outlet control headwater depth at design flow for various types of culverts and inlets. Outlet control nomographs other than those provided can be found in *FHWA HDS No.5* or the *WSDOT Hydraulic Manual*.

The outlet control headwater depth may also be determined using the simple Backwater Analysis method presented in Section D4-05.9(D) for analyzing pipe system capacity. This procedure is summarized as follows for culverts:

$$HW = H + TW - LS \qquad (4\text{-}8)$$

where $H = H_f + H_e + H_{ex}$

H_f = friction loss (ft) = $(V^2 n^2 L)/(2.22R^{1.33})$

Note: If (Hf+TW-LS) < D, adjust Hf such that (Hf+TW-LS) = D. This will keep the analysis simple and still yield reasonable results (erring on the conservative side).

H_e = entrance head loss (ft) = $K_e(V^2/2g)$

H_{ex} = exit head loss (ft) = $V^2/2g$

TW = tailwater depth above invert of culvert outlet (ft)

Note: If TW < $(D+d_c)/2$, set TW = $(D+d_c)/2$. This will keep the analysis simple and still yield reasonable results.

L = length of culvert (ft)

S = slope of culvert barrel (ft/ft)

D = interior height of culvert barrel (ft)

V = barrel velocity (fps)

n = Manning's roughness coefficient from Table 4.9

R = hydraulic radius (ft)

K_e = entrance loss coefficient from Table 4.7

g = acceleration due to gravity (32.2 ft/sec^2)

d_c = critical depth (ft); refer to Figure 4.14

Note: The above procedure should not be used to develop stage/discharge curves for level pool routing purposes because its results are not precise for flow conditions where the hydraulic grade line falls significantly below the culvert crown (i.e., less than full flow conditions).

Table 4.7 Entrance Loss Coefficients

Type of Structure and Design Entrance	Coefficient, K_e
Pipe, Concrete, PVC, Spiral Rib, DI, and LCPE	
Projecting from fill, socket (bell) end	0.2
Projecting from fill, square cut end	0.5
Headwall, or headwall and wingwalls	
Socket end of pipe (groove-end)	0.2
Square-edge	0.5
Rounded (radius = $^1/_{12}$D)	0.2
Mitered to conform to fill slope	0.7
End section conforming to fill slope*	0.5
Beveled edges, 33.7° or 45° bevels	0.2
Side- or slope-tapered inlet	0.2
Pipe, or Pipe-Arch, Corrugated Metal and Other Non-Concrete or D.I.	
Projecting from fill (no headwall)	0.9
Headwall, or headwall and wingwalls (square-edge)	0.5
Mitered to conform to fill slope (paved or unpaved slope)	0.7
End section conforming to fill slope*	0.5
Beveled edges, 33.7° or 45° bevels	0.2
Side- or slope-tapered inlet	0.2
Box, Reinforced Concrete	
Headwall parallel to embankment (no wingwalls)	
Square-edged on 3 edges	0.5
Rounded on 3 edges to radius of $^1/_{12}$ barrel dimension or beveled edges on 3 sides	0.2
Wingwalls at 30° to 75° to barrel	
Square-edged at crown	0.4
Crown edge rounded to radius of $^1/_{12}$ barrel dimension or beveled top edge	0.2
Wingwall at 10° to 25° to barrel	
Square-edged at crown	0.5
Wingwalls parallel (extension of sides)	
Square-edged at crown	0.7
Side- or slope-tapered inlet	0.2

* *Note:* "End section conforming to fill slope" are the sections commonly available from manufacturers. From limited hydraulic tests they are equivalent in operation to a headwall in both inlet and outlet control. Some end sections incorporating a closed taper in their design have a superior hydraulic performance.

Computer Applications

The "King County Backwater" (KCBW) computer program available from King County contains two subroutines (BWPIPE and BWCULV) that may be used to analyze culvert capacity and develop stage/discharge curves for level pool routing purposes. A schematic description of the nomenclature used in these subroutines is provided in Figure 4.15. The KCBW program documentation available from King County Department of Natural Resources and Parks includes more detailed descriptions of program features.

Figure 4.9 Inlet/Outlet Control Conditions

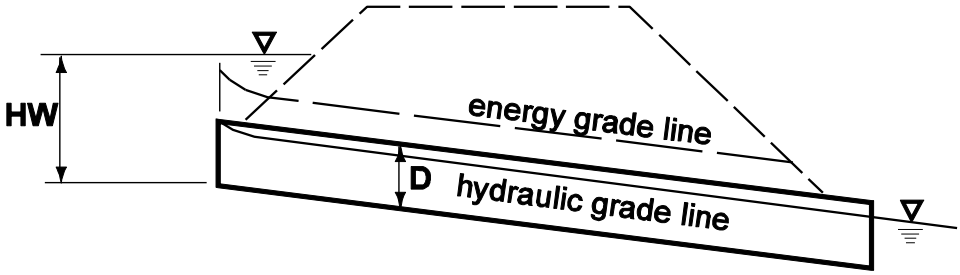

Inlet Control - Submerged Inlet

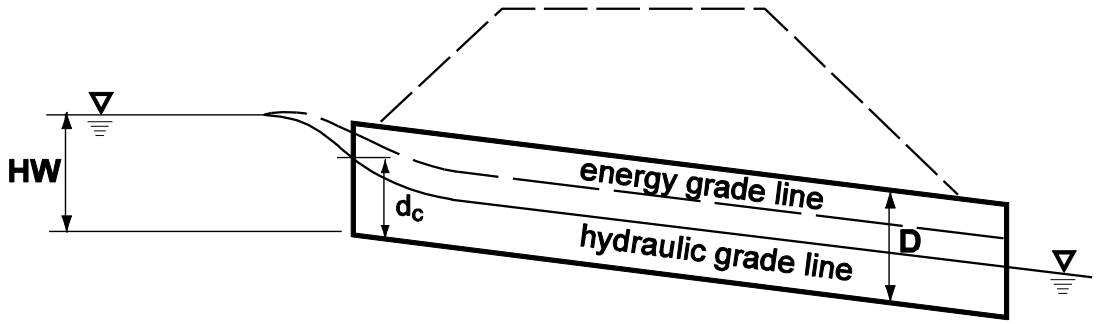

Inlet Control - Unsubmerged Inlet

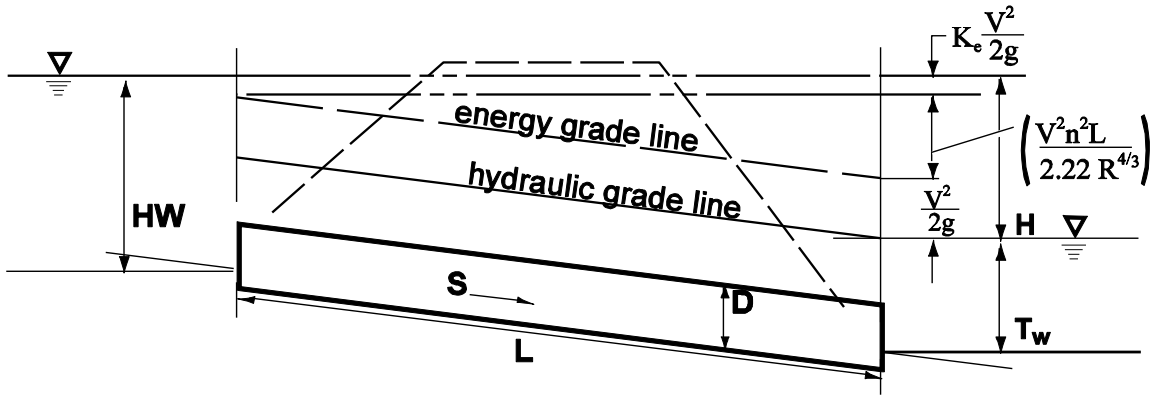

Outlet Control - Submerged Inlet and Outlet

NOTE: See FHWA no. 5 for other possible conditions

Figure 4.10 Headwater Depth For Smooth Interior Pipe Culverts With Inlet Control

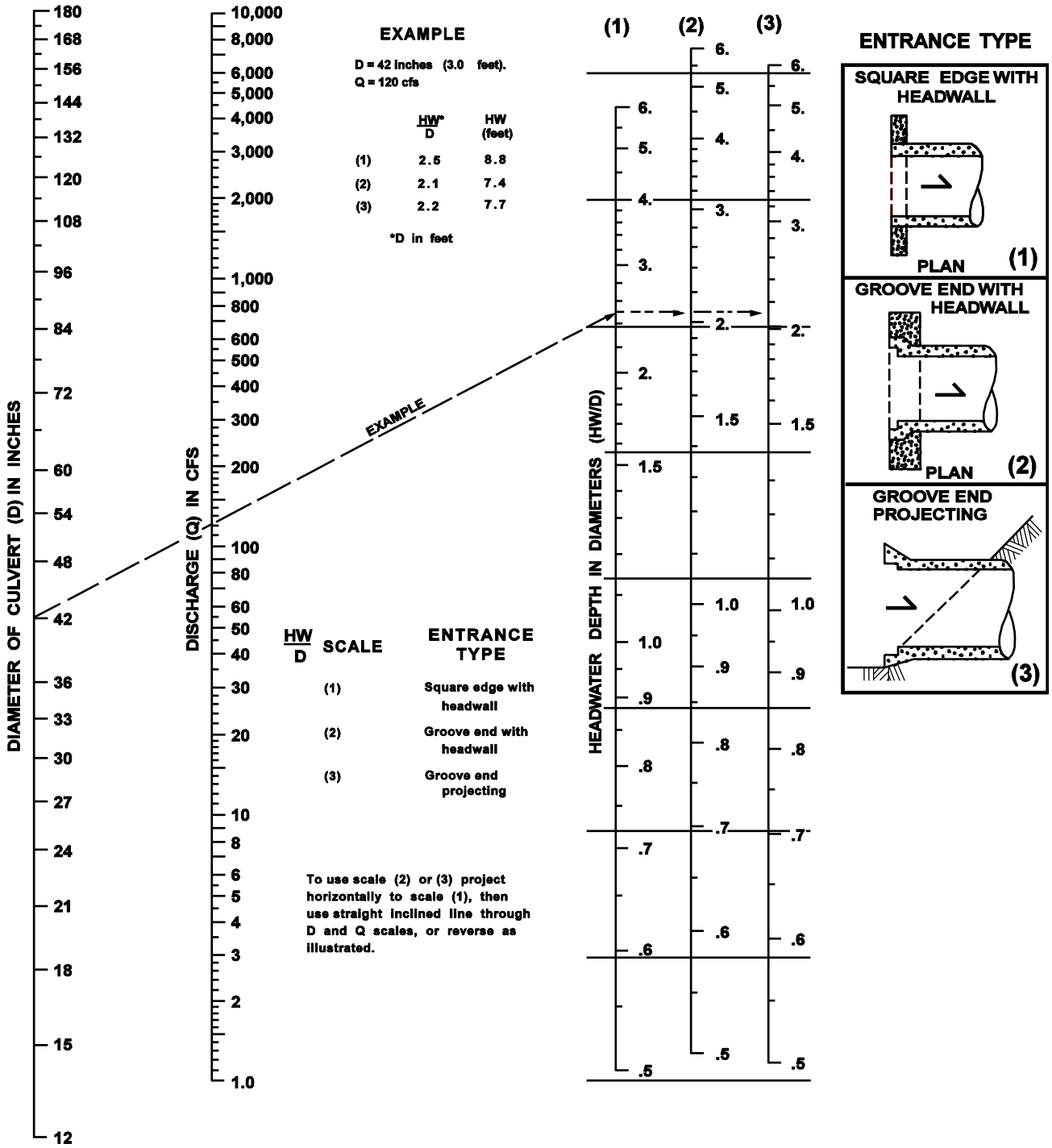

Figure 4.11 Headwater Depth For Corrugated Pipe Culverts With Inlet Control

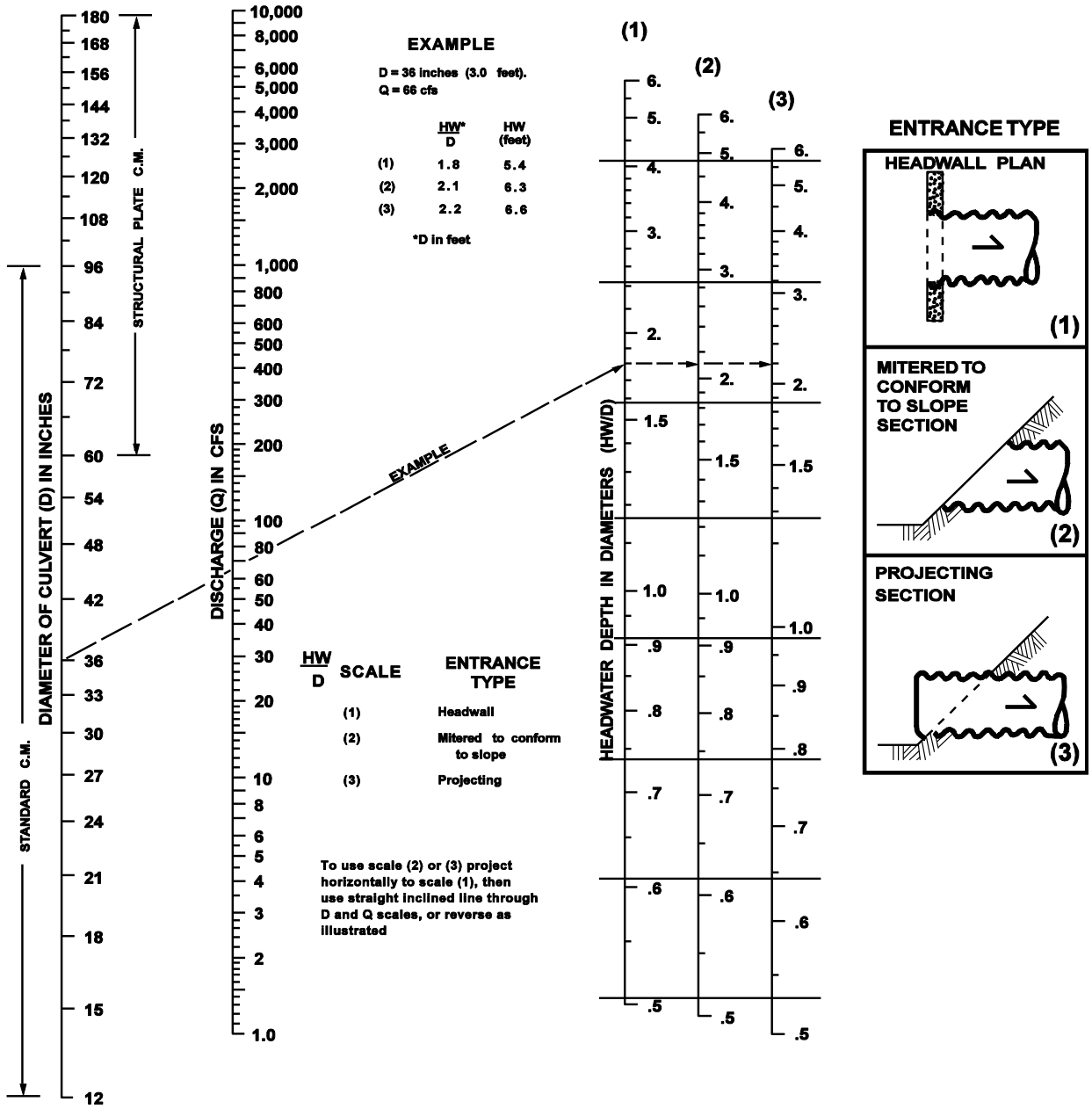

Figure 4.12 Head For Culverts (Pipe W/"*N*"= 0.012) Flowing Full With Outlet Control

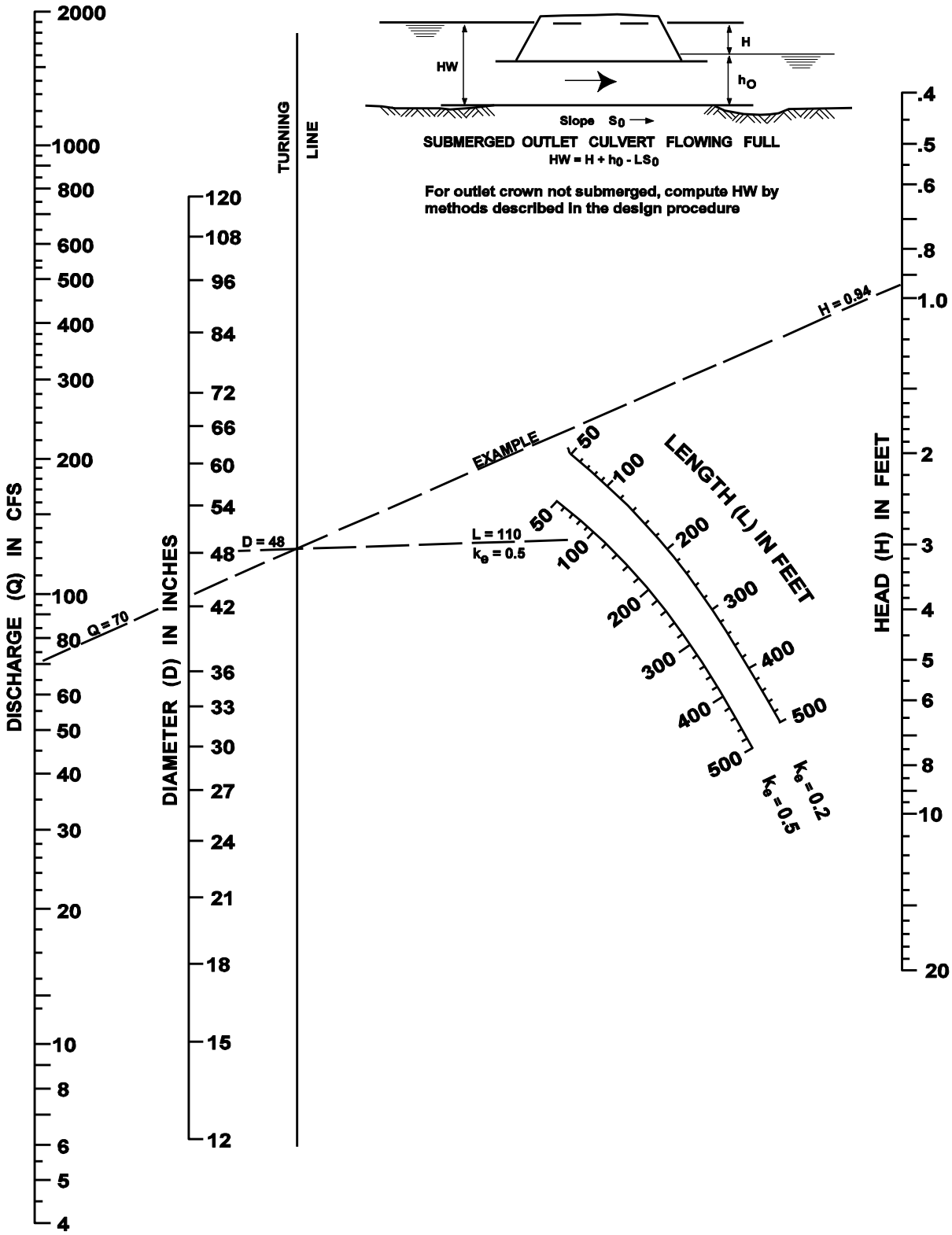

Figure 4.13 Head For Culverts (Pipe W/"*N*"= 0.024) Flowing Full With Outlet Control

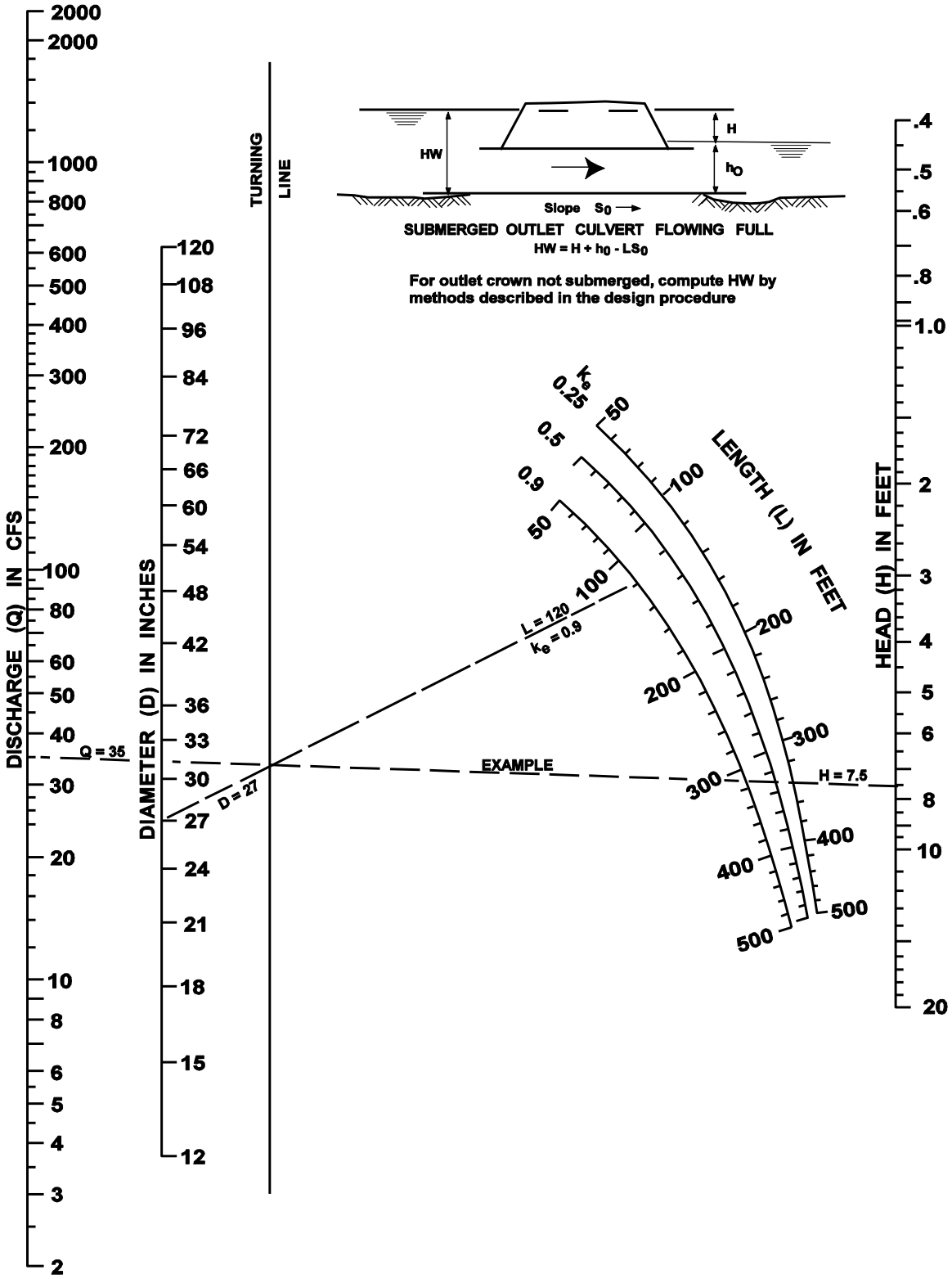

Figure 4.14 Critical Depth Of Flow For Circular Culverts

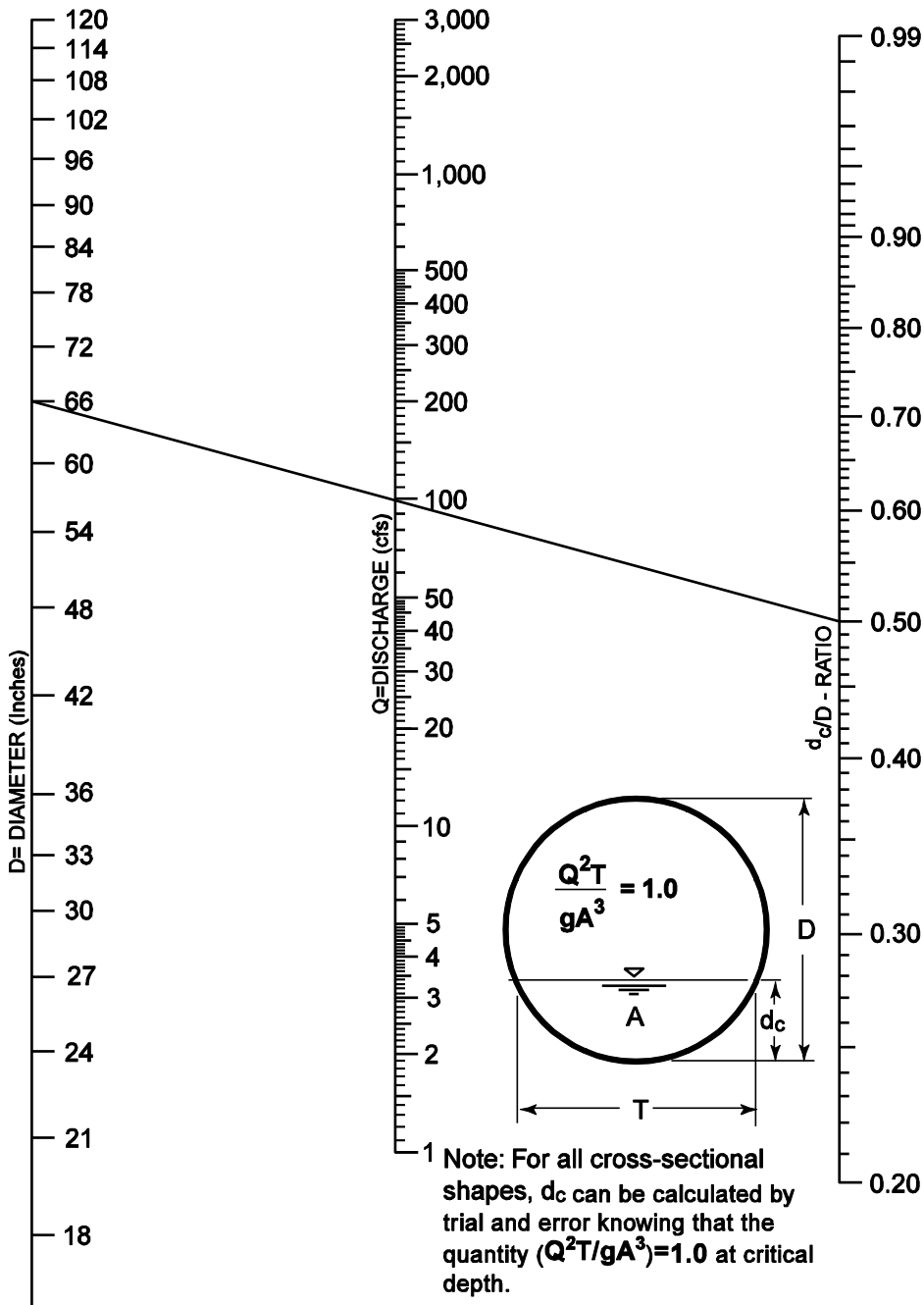

Note: For all cross-sectional shapes, d_c can be calculated by trial and error knowing that the quantity (Q^2T/gA^3)=1.0 at critical depth.

EXAMPLE

D = 66 inches, Q = 100cfs

d_c/D - Ratio = 0.50

d_c = (0.50)(66 inches)= 33 inches √ (12 inches/ft)

d_c= 2.75 feet

Figure 4.15 Computer Subroutines Bwpipe And Bwculv: Variable Definitions

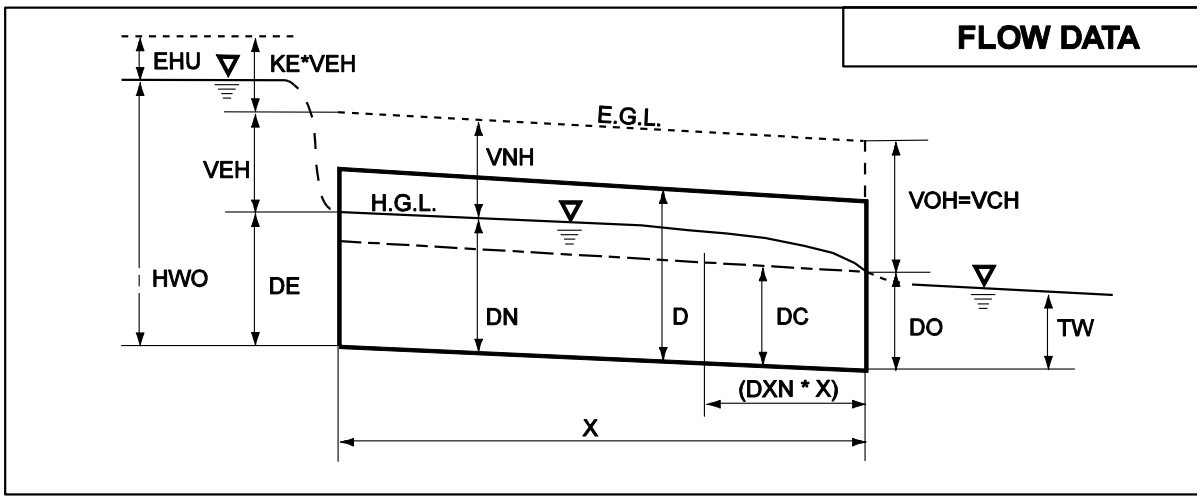

FLOW DATA	COEFFICIENTS/INLET DATA
DC -Critical Depth (ft)	**KE -Entrance Coefficient under Outlet Control**
DN -Normal Depth (ft)	**KB -Bend Loss Coefficient**
TW -Tailwater Depth (ft)	**KJ -Junction Loss Coefficient**
DO -Outlet Depth (ft)	**K -Inlet Control Equation parameter (See Table 4.6)**
DE -Entrance Depth (ft)	**M -Inlet Control Equation parameter (See Table 4.6)**
HWO -Headwater (ft) assuming Outlet Control	**C -Inlet Control Equation parameter (See Table 4.6)**
HWI -Headwater (ft) assuming Inlet Control	**Y -Inlet Control Equation parameter (See Table 4.6)**
DXN -Distance (expressed as a fraction of the pipe length) from the outlet to where the flow profile intersects with normal depth. DXN will equal one under full-flow conditions and will equal zero when a hydraulic jump occurs at the outlet or when normal depth equals zero (normal depth will equal zero when the pipe grade is flat or reversed).	**Q-Ratio Ratio of tributary flow to main upstream flow of Q3/Q1**
VBH -Barrel Velocity Head (ft) based on the average velocity determined by V=Q/Afull	
VUH -Upstream Velocity Head (ft) based on an inputted velocity.	
EHU -Upstream Energy Head (ft) available after bend losses and junction losses have been subtracted from VUH.	
VCH -Critical Depth Velocity Head (ft)	
VNH -Normal Depth Velocity Head (ft)	
VEH -Entrance Depth Velocity Head (ft)	
VOH -Outlet Depth Velocity Head (ft)	

D4-05.8 Culverts Providing for Fish Passage/Migration

A. General

In fish-bearing waters, water-crossing structures must usually provide for fish passage as required for Washington State Department of Fish and Wildlife (WDFW) Hydraulic Project Approval or as a condition of permitting under Bellevue's Critical Areas regulations (BCC 20.25H).

Fish passage can generally be enabled by providing structures that do not confine the streambed—that is, a structure wide enough so that the stream can maintain its natural channel within the culvert. Bridges, bottomless arch culverts, arch culverts, and rectangular box culverts ("utility vaults") can often be used to accommodate stream channels.

Where it is unfeasible to construct these types of structures, round pipe culverts may be used if high flow velocities are minimized and low flow depths are maximized. The Hydraulic Code Rules (Title 220 WAC) detail requirements for WDFW Hydraulic Project Approval. See the WDFW manual "Design of Road Culverts for Fish Passage" for detailed design methodologies.

B. Materials

Galvanized metals leach zinc into the environment, especially in standing water situations. High zinc concentrations, sometimes in the range that can be toxic to aquatic life, have been observed in the region. Therefore, use of galvanized materials in stormwater facilities and conveyance systems is discouraged. Where other metals, such as aluminum or stainless steel, or plastics are available, they should be used. Refer to Section D6 – Materials for additional details.

C. Design Criteria

Table 4.8 (from Title 220 WAC) lists allowable velocities, flow depths, and hydraulic drops for culverts in fish-bearing streams. Velocities are for the high flow design discharge; water depths are for the low flow design discharge. The hydraulic drop (a vertical drop in the water surface profile at any point within culvert influence) is for all flows between the high and low flow design discharges.

Table 4.8 Fish Passage Design Criteria

	Adult Trout	Adult Pink, Chum Salmon	Adult Chinook, Coho, Sockeye, Steelhead
1. Max Velocity (fps)			
Culvert Length:			
10-60 ft	4.0	5.0	6.0
60-100 ft	4.0	4.0	5.0
100-200 ft	3.0	3.0	4.0
2. Min Flow Depth (ft)	0.8	0.8	1.0
3. Max Hydraulic Drop (ft)	0.8	0.8	1.0

D. Methods of Analysis

High Flow Design Discharge

The high flow design discharge shall be estimated by one of the following:

- The 10% exceedance flow for October through April inclusive for the nearest hydrologically similar gauged stream, proportioned by tributary area
- The 5% exceedance flow determined through duration analysis with an approved continuous model
- The 10% exceedance flow for October through April inclusive determined with an approved continuous model using the full historical record for SeaTac rainfall region, Bellevue Adjustment factor = 1.065.

Low Flow Design Discharge

The low flow design discharge shall be estimated by one of the following:

- The 95% exceedance flow for October through April inclusive for the nearest hydrologically similar gaged stream, proportioned by tributary area
- The 95% exceedance flow for October through April inclusive, determined by an approved continuous model using the full historical record for SeaTac rainfall region, adjusted for Bellevue

If using KCRTS input dataf or the Sea-Tac rainfall region:

$$Q_l = f_r\,(0.46A_{tf} + 0.56A_{tp} + 0.46A_{tg} + 0.72A_{of} + 0.96A_{op} + 1.10A_{og}) / 1000 \qquad (4\text{-}9)$$

where Q_l = low flow design discharge (cfs)

f_r = regional rainfall scale factor (For Bellevue, 1.065)

A_{tf} = area of till forest (acres)

A_{tp} = area of till pasture (acres)

A_{tg} = area of till grass (acres)

A_{of} = area of outwash forest (acres)

A_{op} = area of outwash pasture (acres)

A_{og} = area of outwash grass (acres)

Note: Minimum depths may also be met by providing an "installed no-flow depth," per Title 220 WAC, where the static water surface level meets minimum flow depth criteria.

D4-05.9 Storm Drains

A. General

Storm drains shall be provided for curb street sections in accordance with the structure spacing requirements set forth in Section D4-06.2 herein.

Where trench lines may convey groundwater, seepage barriers shall be installed.

Catch basins or manholes are required when joining pipes of different materials (does not apply to "taps") and joining pipes of different slopes. Vertical bends are not permitted.

If a vertical bend in a storm system is proposed by the Designer, is found to conform to Section S3-04 (N) of the sewer section of these Engineering Standards, and is approved by the City, then the system must be designed for video camera inspection and be videotaped and pass inspection at the cost of the Developer before construction acceptance.

B. Freeboard Requirements

Design conveyance systems shall have non-pressurized (non-surcharged) flow during the 100-year design storm; except that the last pipe run upstream of a detention facility or open outfall (into a stream or lake) may be inundated during the 100-year event to a maximum distance of 200 linear feet, and if all the other conditions of the Engineering Standards are met. This also applies for outfalls into streams where the outfall elevation is set at the bank-full water surface elevation (2-year storm) according to Section D4-05.2(B).

C. Design Flows

Design flows for sizing or assessing the capacity of pipe systems shall be determined using the hydrologic analysis methods described in Chapter D3.

D. Conveyance Capacity

Two methods of hydraulic analysis are used sequentially for the design and analysis of pipe systems. First, either the Rational Method or the Uniform Flow Analysis method is used for calculating the design flow rates that are used for the preliminary sizing of new pipe systems. Second, the Backwater Analysis method is used to analyze both proposed and existing pipe systems to verify adequate capacity.

Note: Use of the Uniform Flow Analysis method or the Rational Method to determine preliminary pipe sizes is only suggested as a first step in the design process; it is not required. Results of the Backwater Analysis method determine final pipe sizes in all cases.

Uniform Flow Analysis Method

This method is used for preliminary sizing of new pipe systems to convey the *design flow* (i.e., the 100-year peak flow rate.)

Assumptions:

- Flow is uniform in each pipe (i.e., depth and velocity remain constant throughout the pipe for a given flow).
- Friction head loss in the pipe barrel alone controls capacity. Other head losses (e.g., entrance, exit, junction, etc.) and any backwater effects or inlet control conditions are not specifically addressed.
- Each pipe within the system is sized and sloped such that its barrel capacity at normal full flow (computed by Manning's equation) is equal to or greater than the design flow. The nomograph in Figure 4.16 may be used for an approximate solution of Manning's equation. For more precise results, or for partial pipe full conditions, solve Manning's equation directly:

$$V = \frac{1.49}{n} R^{2/3} S^{1/2} \tag{4-10}$$

or use the continuity equation, $Q = AV$, such that:

$$Q = \frac{1.49}{n} A R^{2/3} S^{1/2} \tag{4-11}$$

Where: Q = discharge (cfs)

V = velocity (fps)

A = area (sf)

n = Manning's roughness coefficient; see Table 4.9

R = hydraulic radius = area/wetted perimeter (ft)

S = slope of the energy grade line (ft/ft)

- For pipes flowing partially full, the actual velocity may be estimated from the hydraulic properties shown in Figure 4.17 by calculating Q_{full} and V_{full} and using the ratio Q_{design}/Q_{full} to find V and d (depth of flow).

Table 4.9 provides the recommended Manning's "n" values for preliminary design using the Uniform Flow Analysis method for pipe systems. *Note: The "n" values for this method are 15% higher in order to account for entrance, exit, junction, and bend head losses.*

Table 4.9 Manning's "N" Values for Pipes

Type of Pipe Material	Analysis Method	
	Uniform Flow (Preliminary design)	Backwater Flow (Capacity Verification)
A. Concrete pipe and LCPE pipe	0.014	0.012
B. Annular Corrugated Metal Pipe or Pipe Arch:		
1. 2-$^{2}/_{3}$" x $^{1}/_{2}$" corrugation (riveted):		
a. plain or fully coated	0.028	0.024
b. paved invert (40% of circumference paved):		
1) flow at full depth	0.021	0.018
2) flow at 80% full depth	0.018	0.016
3) flow at 60% full depth	0.015	0.013
c. treatment 5	0.015	0.013
2. 3" x 1" corrugation	0.031	0.027
3. 6" x 2" corrugation (field bolted)	0.035	0.030
C. Helical 2-$^{2}/_{3}$" x $^{1}/_{2}$" corrugation and CPE pipe	0.028	0.024
D. Spiral rib metal pipe and PVC pipe	0.013	0.011
E. Ductile iron pipe cement lined	0.014	0.012
F. SWPE pipe (butt fused only)	0.009	0.009

Backwater Analysis Method

This method is used to analyze the capacity of both new and existing pipe systems to convey the 100-year peak flow. Pipe system structures must be demonstrated to contain the headwater surface (hydraulic grade line) for the specified peak flow rate. Structures may not overtop for the 100-year peak flow.

This method is used to compute a simple backwater profile (hydraulic grade line) through a proposed or existing pipe system for the purposes of verifying adequate capacity. It incorporates a re-arranged form of Manning's equation expressed in terms of friction slope (slope of the energy grade line in ft/ft). The friction slope is used to determine the head loss in each pipe segment due to barrel friction, which can then be combined with other head losses to obtain water surface elevations at all structures along the pipe system.

The backwater analysis begins at the downstream end of the pipe system and is computed back through each pipe segment and structure upstream. The friction, entrance, and exit head losses computed for each pipe segment are added to that segment's tailwater elevation (the water surface elevation at the pipe's outlet) to obtain its outlet control headwater elevation. This elevation is then compared with the inlet control headwater elevation; computed assuming the pipe's inlet alone is controlling capacity using the methods for inlet control presented in Section D4-05.7(I). The condition that creates the highest headwater elevation determines the pipe's capacity. The approach velocity head is then subtracted from the controlling headwater elevation and the junction and bend head losses are added to compute the total headwater elevation, which is then used as the tailwater elevation for the upstream pipe segment.

The Backwater Calculation Sheet in Figure 4.18 may be used to compile the head losses and headwater elevations for each pipe segment. The numbered columns in Figure 4.18 are described in Figure 4.19. An example calculation is performed in Figure 4.19.

Note: This method should not be used to compute stage/discharge curves for level pool routing purposes. Instead, a more sophisticated backwater analysis using the computer software provided with this manual is recommended as described below.

Computer Applications

The King County Backwater (KCBW) computer program includes a subroutine BWPIPE, which may be used to quickly compute a family of backwater profiles for a given range of flows through a proposed or existing pipe system. A schematic description of the nomenclature used in this program is provided in Figure 4.15. Program documentation providing instructions on the use of this and the other KCBW subroutines is available from King County Department of Natural Resources and Parks.

Figure 4.16 Nomograph For Sizing Circular Drains Flowing Full

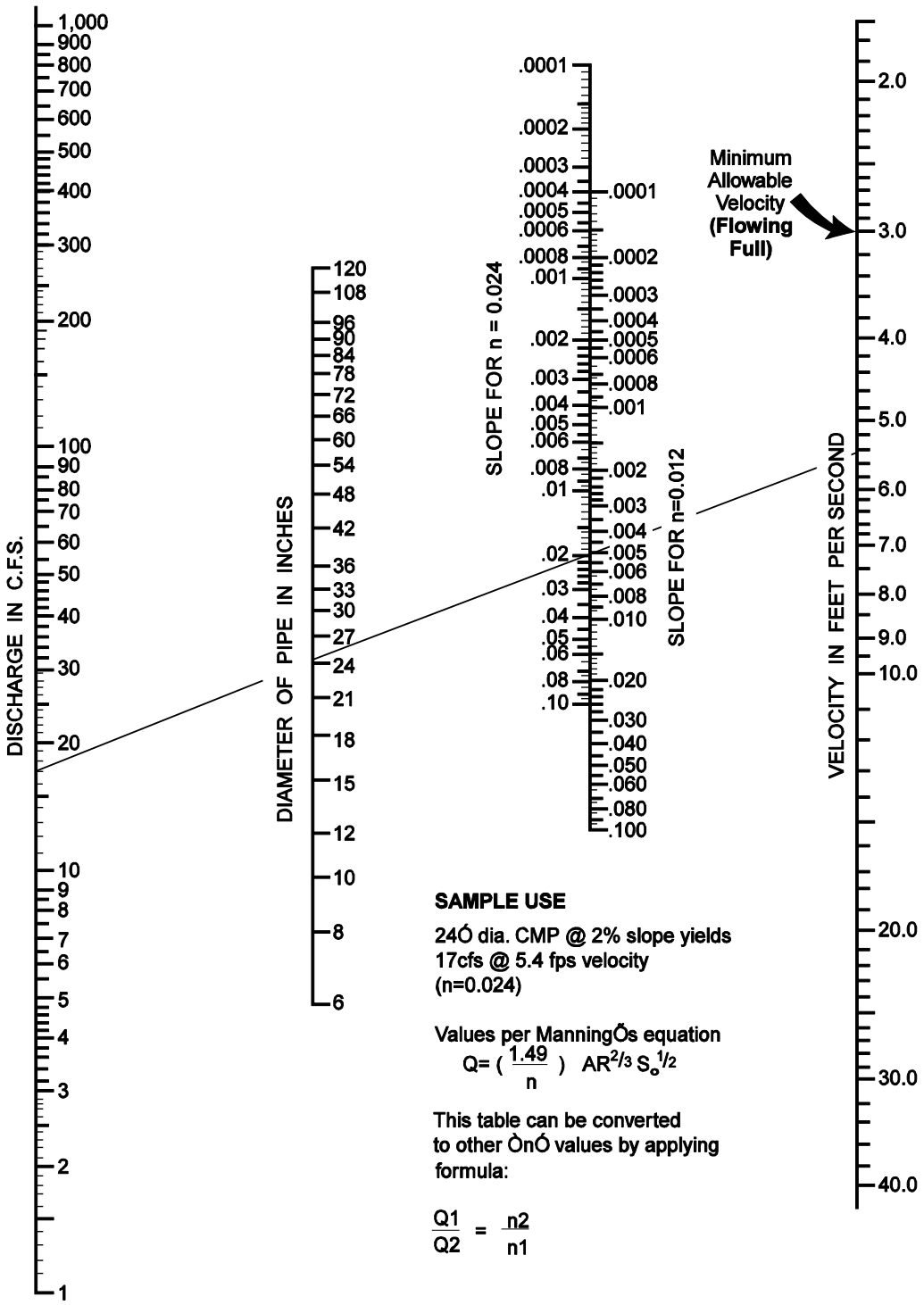

Figure 4.17 Circular Channel Ratios

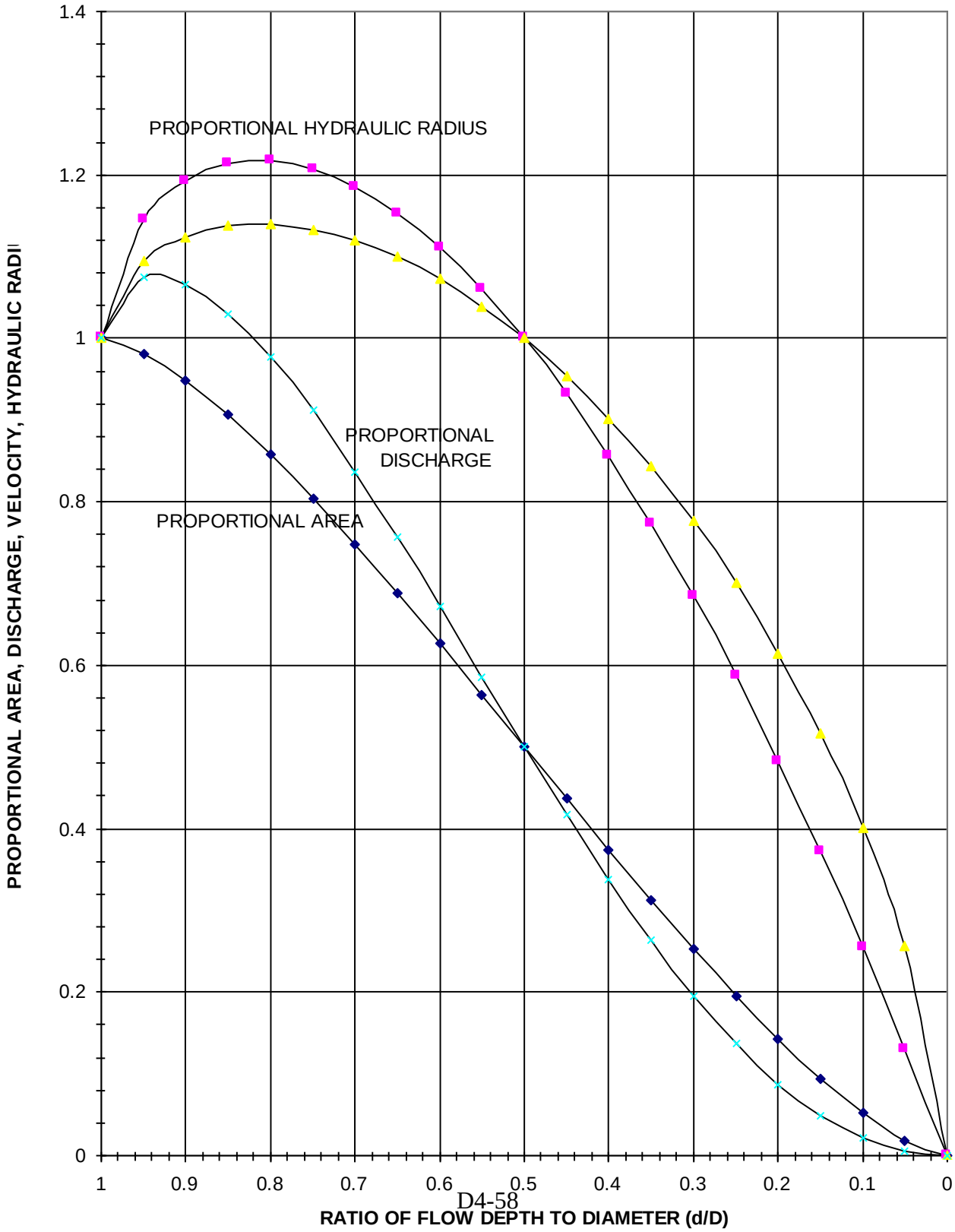

Figure 4.18 Backwater Calculation Sheet

Pipe Segment CB to CB	(1) Q (cfs)	(2) Lngth (ft)	(3) Pipe Size	(4) ÒnÓ Value	(5) Outlet Elev (ft)	(6) Inlet Elev (ft)	(7) Barrel Area (sq. ft)	(8) Barrel Vel (fps)	(9) Barrel Vel Head (ft)	(10) TW Elev (ft)	(11) Fric-tion Loss (ft)	(12) Entr HGL Elev (ft)	(13) Entr Head Loss (ft)	(14) Exit Head Loss (ft)	(15) Outlt Cntrl Elev (ft)	(16) Inlet Cntrl Elev (ft)	(17) Appr Vel Head (ft)	(18) Bend Head Loss (ft)	(19) Junc Head Loss (ft)	(20) HW Elev (ft)

Figure 4.18 Backwater Calculation Sheet Notes

Column (1) - Design flow to be conveyed by pipe segment.

Column (2) - Length of pipe segment.

Column (3) - Pipe Size; indicate pipe diameter or span x rise.

Column (4) - Manning's "*n*" value.

Column (5) - Outlet Elevation of pipe segment.

Column (6) - Inlet Elevation of pipe segment.

Column (7) - Barrel Area; this is the full cross-sectional area of the pipe.

Column (8) - Barrel Velocity; this is the full velocity in the pipe as determined by:
$V = Q/A$ or Col.(8) = Col.(1) / Col.(7)

Column (9) - Barrel Velocity Head = $V^2/2g$ or $(\text{Col.}(8))^2/2g$
where g = 32.2 ft/sec^2 (acceleration due to gravity)

Column (10) - Tailwater (*TW*) Elevation; this is the water surface elevation at the outlet of the pipe segment. If the pipe's outlet is not submerged by the *TW* and the *TW* depth is less than $(D+d_c)/2$, set TW equal to $(D+d_c)/2$ to keep the analysis simple and still obtain reasonable results (D = pipe barrel height and d_c = critical depth, both in feet. See Figure 4.14 for determination of d_c).

Column (11) - Friction Loss = Sf x L [or Sf x Col.(2)]
where Sf is the friction slope or head loss per linear foot of pipe as determined by Manning's equation expressed in the form: $Sf = (nV)^2/2.22\ R^{1.33}$

Column (12) - Hydraulic Grade Line (HGL) Elevation just inside the entrance of the pipe barrel; this is determined by adding the friction loss to the TW elevation: Col.(12) = Col.(11) + Col.(10)
If this elevation falls below the pipe's inlet crown, it no longer represents the true HGL when computed in this manner. The true HGL will fall somewhere between the pipe's crown and either normal flow depth or critical flow depth, whichever is greater. To keep the analysis simple and still obtain reasonable results (i.e., erring on the conservative side), set the HGL elevation equal to the crown elevation.

Column (13) - Entrance Head Loss = Ke x $V^2/2g$ [or Ke x Col.(9)] where Ke = Entrance Loss Coefficient (from Table 4.7). This is the head lost due to flow contractions at the pipe entrance.

Column (14) - Exit Head Loss = 1.0 x $V^2/2g$ or 1.0 x Col.(9)

This is the velocity head lost or transferred downstream.

Column (15) - Outlet Control Elevation = Col.(12) + Col.(13) + Col.(14)

This is the maximum headwater elevation assuming the pipe's barrel and inlet/outlet characteristics are controlling capacity. It does not include structure losses or approach velocity considerations.

Column (16) - Inlet Control Elevation (see SectionD4-04.7(I), for computation of inlet control on culverts); this is the maximum headwater elevation assuming the pipe's inlet is controlling capacity. It does not include structure losses or approach velocity considerations.

Column (17) - Approach Velocity Head; this is the amount of head/energy being supplied by the discharge from an upstream pipe or channel section, which serves to reduce the headwater elevation. If the discharge is from a pipe, the approach velocity head is equal to the barrel velocity head computed for the upstream pipe. If the upstream pipe outlet is significantly higher in elevation (as in a drop manhole) or lower in elevation such that its discharge energy would be dissipated, an approach velocity head of zero should be assumed.

Column (18) - Bend Head Loss = Kb x $V^2/2g$ [or Kb x Col.(17)]
where Kb = Bend Loss Coefficient (from Figure 4.20). This is the loss of head/energy required to change direction of flow in an access structure.

Column (19) - Junction Head Loss. This is the loss in head/energy that results from the turbulence created when two or more streams are merged into one within the access structure. Figure 4.21 may be used to determine this loss, or it may be computed using the following equations derived from Figure 4.21:

Junction Head Loss = Kj x $V^2/2g$ [or Kj x Col.(17)]

where Kj is the Junction Loss Coefficient determined by:

$$Kj = (Q3/Q1)/(1.18 + 0.63(Q3/Q1))$$

Column (20) - Headwater (HW) Elevation; this is determined by combining the energy heads in Columns 17, 18, and 19 with the highest control elevation in either Column 15 or 16, as follows:
Col.(20) = Col.(15 or 16) - Col.(17) + Col.(18) + Col.(19)

Figure 4.19 Backwater Calculation Example

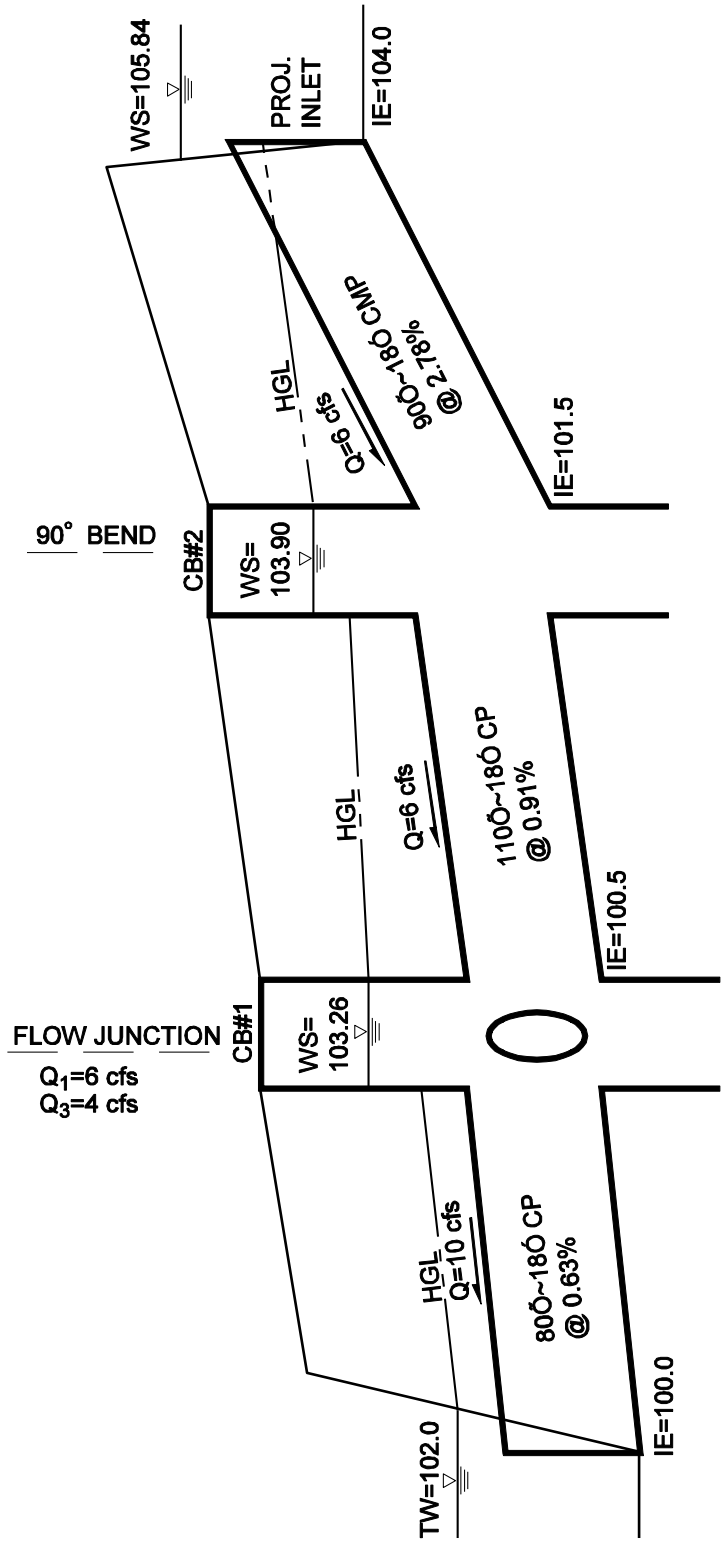

B A C K W A T E R C A L C U L A T I O N S H E E T

Select the greater elevation

Pipe Segment CB to CB		(1) Q (cfs)	(2) Length (ft)	(3) Pipe Size	(4) ÒnÓ Value	(5) Outlet Elev (ft)	(6) Inlet Elev (ft)	(7) Barrel Area (sqft)	(8) Barrel Vel (fps)	(9) Barrel Vel Head (ft)	(10) TW Elev (ft)	(11) Fric-tion Loss (ft)	(12) Entr HGL Elev (ft)	(13) Entr Head Loss (ft)	(14) Exit Head Loss (ft)	(15) Outlt Contr Elev (ft)	(16) Inlet Contr Elev (ft)	(17) Appr Vel Head (ft)	(18) Bend Head Loss (ft)	(19) Junc Head Loss (ft)	(20) HW Elev (ft)
Out fall	1	10	80	18Ó	0.012	100.00	100.50	1.77	5.65	0.50	102.00	0.62	102.62	0.25	0.50	103.37	102.75	-0.18	0.002	0.07	103.26
1	2	6	110	18Ó	0.012	100.50	101.50	1.77	3.39	0.18	103.26	0.31	103.57	0.09	0.18	103.84	102.95	-0.18	0.24	0.0	103.90
2	Inlet	6	90	18Ó	0.024	101.50	104.00	1.77	3.39	0.18	103.90	1.00	(104.9) 105.5	0.16	0.18	105.84	105.80	-0.0	0.0	0.0	105.84

Figure 4.20 Bend Head Losses In Structures

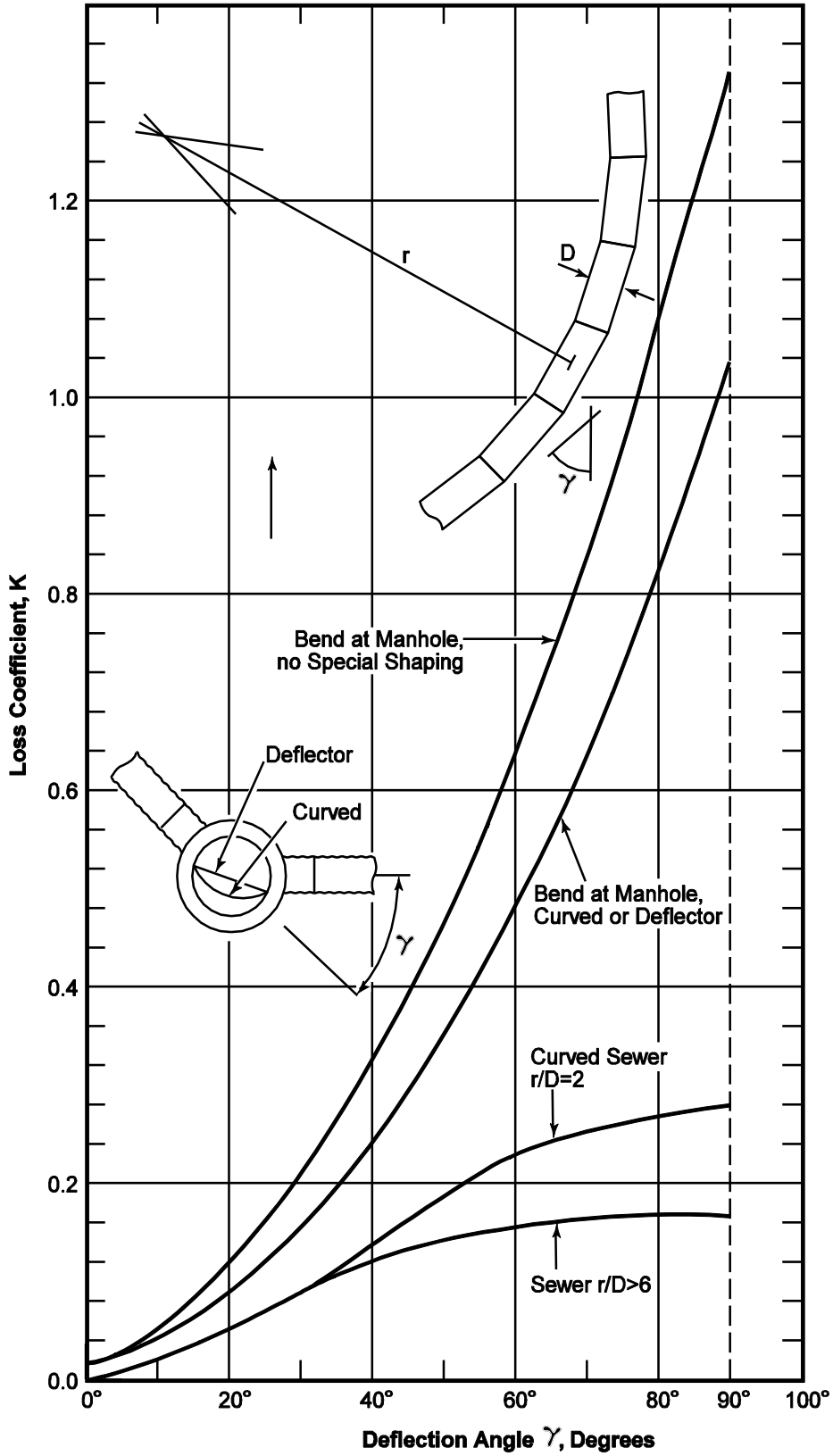

Figure 4.21 Junction Head Loss In Structures

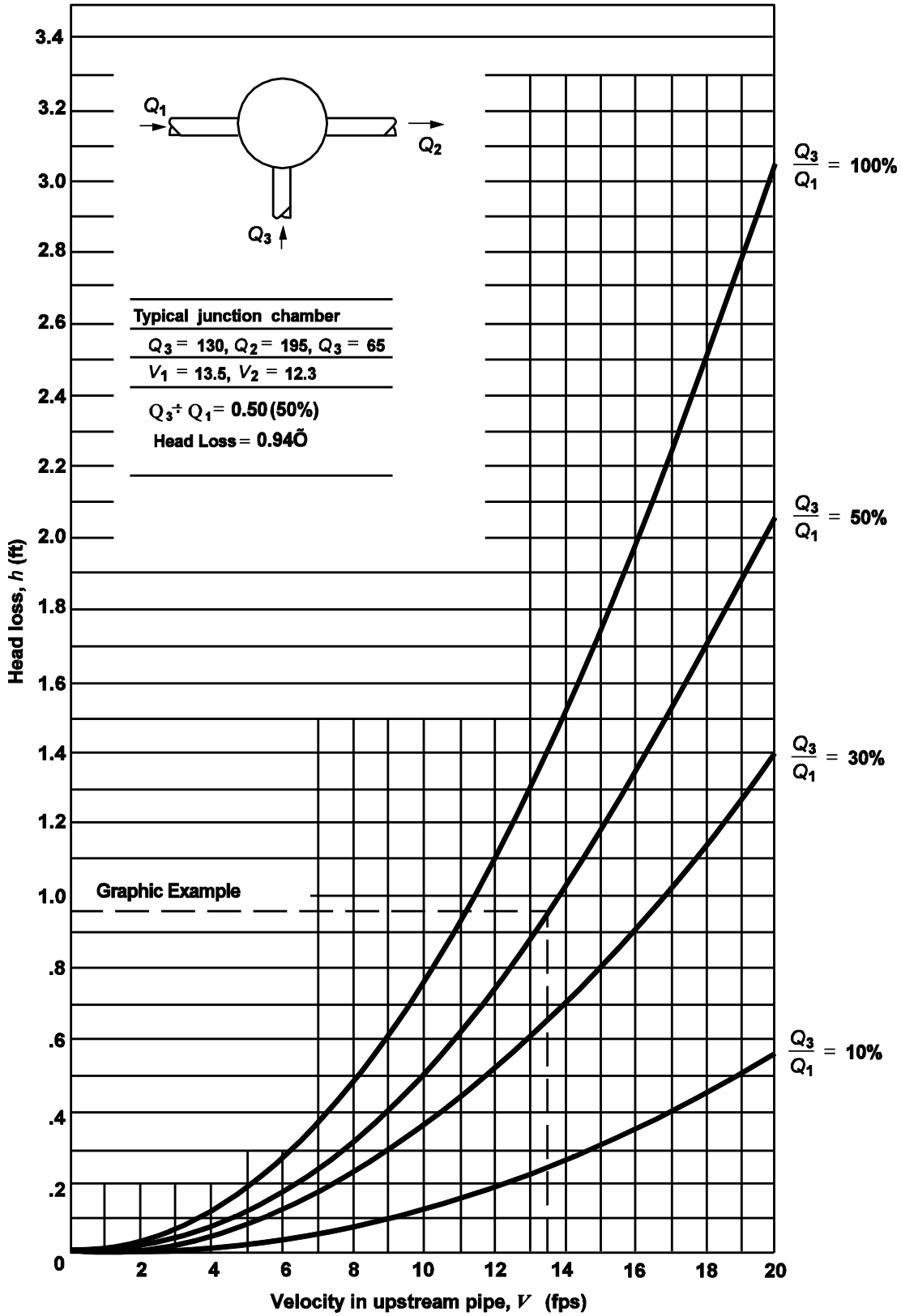

Pipe System Analysis and Sizing with the Rational Method

Figure 4.22 has been provided to allow for the tabular computation of "C-A" values used in sizing a new pipe system. Following computation of the time of concentration to the first structure, where flow enters the proposed pipe system, the travel times through the pipe lengths are added to become the Tc for the design flow at the next downstream pipe run. The flows computed at structures (manholes and catch basins) may be used to estimate the water surface profile along the pipe system. See Section D3-02.3 for additional information on rational method computational methods.

CONVEYANCE SYSTEM ANALYSIS AND SIZING TABLE USING THE RATIONAL METHOD

Location		Sub Basin Number	Area (ac)	C	C-A	Sum C-A	T_c min	i_R	I_R	Q_R cfs	Pipe in	Typ n	Slope ft/ft	Q_F pipe full	V pipe ful	V at Q_R	L ft	T_t min
From	To																	

E. Minimum Diameter, Slope and Velocity

Minimum slope for conveyance pipes shall be 0.5% unless specified otherwise herein. Minimum diameter for a conveyance pipes in a roadway shall be 12-inches except for roadway laterals and pipes connecting private drainage systems or wall drains to the drainage system.

For roadway laterals, the minimum diameter is 8-inches provided:

- Length of pipe does not exceed 100 feet;
- Pipe slope is greater than or equal to 2%; and
- Only one stormwater inlet contributes surface runoff to the roadway lateral.

For individual single family residences, conveyance pipes for roof, footing, and yard drains shall be a minimum of 4-inches in diameter. Connections to the storm drain system shall be a minimum of 6-inches once outside the lot being connected. For joint-use lines between single family homes, that portion of the line which is jointly used shall be 6-inches in diameter minimum. Minimum slopes for single family storm drain lines (footing and conveyance): 2% on 4-inch and 6-inch diameter, and 0.5% on 8-inch diameter (if used). The minimum velocity in all storm drain conveyance systems for the conveyance design storm (100-year, 24-hour) is 3 fps.

For driveways, parking lots and situations not listed above, the minimum diameter for conveyance pipes shall be 8-inches.

Any storm line with a 20% slope or greater shall provide pipe anchors and hill holders according to the applicable storm drainage standard details.

F. Maintenance Access

All stormwater facilities shall be accessible for maintenance and operation.

When vehicle access is necessary, access roads shall be provided in dedicated tracts or dedicated access easements. The minimum clear driving lane width is 12 feet.

Gates and/or bollards are required when necessary to restrict access to stormwater facilities. Such measures shall comply with the Land Use Code and these engineering standards. Cables and/or chains stretched across access roads are not acceptable.

D4-05.10 Private Drainage Systems

When a new plat is developed and contains a portion of public right-of-way, the drainage system, including conveyance, On-site Stormwater Management, Flow Control, and Water Quality Treatment BMPs, located in the public right-of-way, tract or easement dedicated and accepted by the City of Bellevue, and are owned and maintained by the City of Bellevue.

The drainage system located in the right-of-way will only be public if the area drained from the public right-of-way is new right-of-way created as part of the project. Otherwise, drainage systems located in the right-of-way that do not manage runoff from newly created right-of-way areas, as well as those located on private property will be privately owned and maintained.

Part A below addresses private drainage systems on single family residential lots, while Part B addresses private drainage systems on commercial and multi-family lots, including residential subdivisions.

A. Private Single Family Residential Lots

1) General

Private single family drainage systems shall comply with all criteria for stormwater systems set forth herein, unless specifically exempted.

When Minimum Requirement #5 - On-site Stormwater Management, #6 – Runoff Treatment, and/or #7 – Flow Control apply, first evaluate and implement BMPs as required per Chapter D1 and described in Chapter D5. For any remaining surface areas not fully managed by on-site practices and BMPs, connect stormwater outfalls as described herein:

- In areas having an existing piped conveyance system, the stormwater outfalls for the following surface types shall be made by the following.
  - For driveways, walkways, patios, and other non-roof hard surface areas (in order of preference):
    - Connect the conveyance pipeline to an existing manhole or catch basin.
    - Construct a new manhole or catch basin on the existing storm drainage pipeline and connecting the conveyance pipeline to this new structure.
  - For roof, footing, and yard drains - May be made by the two methods mentioned above or by the following (in order of preference):
    - Connect the private drainage pipe to an existing storm drain manhole, catch basin or stub-out if provided within 100 feet and downslope of the property line.
    - Tap the abutting conveyance pipeline and installing a saddle tee and providing a clean-out outside of the public right-of-way.
    - Tap the abutting profile wall conveyance pipeline and install an insert tee and clean-out outside of the right-of-way; or tap the abutting concrete conveyance pipeline with a hole-cut by a core drill and installing a saddle.

      Note: Blind tapping of corrugated metal pipe (CMP) is only allowed when sufficient cover exists over the pipe.
    - Install a tee fitting in the abutting conveyance pipeline and provide a clean-out outside of the public right-of-way.
    - Connect the private drainage pipe to an existing sidewalk drain.
    - Provide a new sidewalk drain if the closest existing drainage system or stub-out is greater than 100 feet and downslope of the property line.
    - Outfall to an open channel or stream, provided that the drainage path continues downstream to an established, known and well-functioning conveyance system, adequate erosion protection is provided and permits from other agencies are obtained, as needed.
- When a project includes the construction of a drainage system, private drainage systems shall connect to the proposed storm drain manholes, catch basins, stub-outs, or tees. The use of sidewalk drains shall not be permitted.
- In areas without an existing drainage system, the private drainage system shall discharge in accordance with Section D4-02 - Outfalls and Discharge Locations.

- Properties that can drain directly to Lake Washington, Lake Sammamish or Mercer Slough shall ensure that the conveyance system is designed in accordance with Section D3-05 of these standards.

2) Roof, Footing, and Yard Drains

If Minimum Requirement #5 - On-site Stormwater Management or Minimum Requirement #7 – Flow Control apply to the project (Chapter D1), roof, footing, and yard drainage shall be managed using appropriate on-site stormwater management BMPs unless demonstrated to be infeasible, per Chapter D5. For sites or portions of sites where on-site BMPs are infeasible, design of roof, footing, and yard drains shall meet the following standards:

- Roof and footing drains shall be separate lines to the on-site collection system. The minimum cover over the storm drain stub shall be two (2) feet.
- Clean-outs (4-inch minimum diameter) with factory manufactured fittings, shall be provided at all junctions and bends greater than 45 degrees. The maximum spacing between clean-outs shall not exceed 100 feet.
- Roof, footing and yard drains shall not be connected to the sanitary sewer system.
- Roof, footing and yard drains shall not be located within the public right-of-way except where connecting to the municipal drainage system.
- Roof, footing and yard drain systems serving more than one parcel shall be within private utility easements.
- Roof, footing, and yard drainage may be conveyed over steep banks in single wall, corrugated polyethylene tubing (CPT) provided:
    - the overbank drain is privately owned and maintained;
    - the minimum tubing slope is 15% or greater;
    - the CPT is continuous and without joints from the top of the slope to the toe;
    - the CPT is a minimum of 4 inches and a maximum of 6 inches in diameter;
    - a yard drain or clean-out is placed at the top of the slope;
    - the overbank drain is buried with a maximum cover of 1 foot; and
    - the outfall discharge is non-erosive.

CPT may not be used in the right-of-way, or for any other purpose except as a privately owned and maintained overbank drain.

3) Maintenance

Maintenance of all stormwater management facilities on single family residential properties shall be designed to provide access for maintenance and operation by the owners of such facilities. These requirements apply to all stormwater management facilities located on single family residential properties, including conveyance; on-site stormwater management facilities; roof, footing, and yard drainage systems; drainage facilities within private easements; and drainage facilities otherwise denoted as private. An O&M Manual shall be provided as an appendix in the Storm Drainage Report, per Section D2-06.

B. Private Commercial and Multi-Family Drainage Systems

1) General

Private commercial and multi-family drainage systems shall comply with all criteria for stormwater systems set forth herein, unless specifically exempted, and shall be privately inspected and certified to comply with these Standards.

For new single family subdivision developments, if a new public road is dedicated with the plat, the conveyance, On-site Stormwater Management, Water Quality Treatment, and Flow Control BMPs that serve both the new public roadway and the subdivision would be owned and operated by the City. A hold harmless agreement shall be provided to the City by the Developer if access to the BMPs is across a private roadway. If the new subdivision includes only frontage improvements and no new public roadway is created, the BMPs serving both the frontage improvements and the subdivision shall be privately owned and maintained.

For single family subdivision developments, see additional requirements for drainage systems on private single family residential lots in Section D4-05-10.A.

If Minimum Requirement #5 - On-site Stormwater Management, Minimum Requirement #6 – Runoff Treatment, and/or Minimum Requirement #7 – Flow Control apply to the project, first evaluate and implement BMPs as required in Chapter D1 and described in Chapter D5. For any remaining surface areas not fully managed by on-site practices and BMPs, connect stormwater outfalls as described herein:

- In areas having an existing piped conveyance system:
  - The stormwater outfalls for parking lot, driveway, and roadway drainage shall be made by the following (in order of preference):
    - Connect the conveyance pipeline to an existing manhole or catch basin.
    - Construct a new manhole or catch basin on the existing storm drainage pipeline and connect the conveyance pipeline to this new structure.
  - The stormwater outfalls for roof, footing, and yard drains may be made by the two methods above or by the following (in order of preference):
    - Connect the private drainage pipe to an existing storm drain manhole, catch basin or stub-out if provided within 100 feet and downslope of the property line.
    - Core the abutting conveyance pipeline and installing a saddle tee and providing a clean-out outside of the public right-of-way.
    - Core the abutting profile wall conveyance pipeline (PVC or corrugated polyethylene only; CMP may not be blind tapped) and installing an insert tee and clean-out outside of the public right-of-way.
    - Install a tee fitting in the abutting conveyance pipeline and provide a clean-out outside of the public right-of-way.
    - Connect the private drainage pipe to an existing sidewalk drain.
    - Provide a new sidewalk drain if the closest existing drainage system or stub-out is greater than 100 feet and downslope of the property line.

- Outfall to an open channel or stream, provided that the drainage path continues downstream to an established, known and well-functioning conveyance system, adequate erosion protection is provided and permits from other agencies are obtained, as needed.

- When a project includes the construction of a drainage system, private drainage systems shall connect to the proposed storm drain manholes, catch basins, stub-outs, or tees. The use of sidewalk drains shall not be permitted.
- In areas without an existing drainage system, the private drainage system shall discharge in accordance with Section D4-02 herein.
- Properties that can drain directly to Lake Washington, Lake Sammamish or Mercer Slough shall ensure that the conveyance system is designed in accordance with Section D3-05 of these Standards.

2) Other On-site Drainage Facilities

All drainage facilities which convey off-site stormwater shall be built to the Standards herein.

Drainage facilities for commercial and multi-family properties shall comply with all criteria for stormwater systems set forth herein; however, they are exempt from Sections D4-05, D4-06, D6-02, D6-03, D7-04, D8-05, and Appendix D-8 - Standard Details, except for any portions within these sections that relate to On-site Stormwater Management, Water Quality Treatment, and Flow Control BMPs, and except for any facilities which convey off-site stormwater.

Other on-site private drainage facilities shall be designed by a Professional Engineer licensed by the State of Washington to meet City Storm & Surface Water Utility Codes and using industry standards and practices.

3) Maintenance

Drainage systems on commercial and multi-family properties, drainage facilities within private easements, and drainage facilities otherwise denoted as private, shall be designed to provide access for maintenance and operation by the owners of such facilities. An O&M Manual shall be provided as an appendix in the Storm Drainage Report per Section D2-06 of these standards.

D4-05.11 Non-Gravity Systems (Pumps)

Pump systems (includes the pumps, force mains, electrical and power supply equipment, structures and appurtenances) are not an approved method of conveying, storing, or treating storm water. A deviation must be approved in order to pump storm water. If the deviation for a pump system is approved, the system shall meet the following minimum requirements:

A. The pump system shall not be used to circumvent any code, engineering standard, or permit condition. The construction and operation of the pump system shall not violate any other City requirements.

B. The Developer shall demonstrate that the pump system is the only feasible alternative available to provide drainage.

C. Pump systems shall be owned, operated, maintained, repaired, and replaced (as needed) by property owner(s) served by such system.

D. Pumped flows shall not exceed the allowable discharge rates set forth herein

E. Each pump shall be capable of discharging the design flow rate for the 100-year, 24-hour design storm.

F. If a stormwater detention system is not required the pump system shall have a storage facility (pond, tank, or vault) sized to hold 25 percent of the total volume of runoff for the developed tributary drainage area for the 2-year storm.

G. The pump system has dual, alternating pumps with emergency on-site, automatic back-up power supply and an external alarm system for system failure and high water level indicator.

H. A safe emergency overflow route shall be provided, if possible.

I. The pump system shall discharge to an elevation higher than the downstream design water surface elevation to prevent backwater/backflow conditions.

J. Maintenance and Operation Schedule shall be prepared and submitted for review prior to permit issuance.

K. A note on the approved plan shall stipulate that the private property owner(s) shall be responsible for any and all claims for injuries and damage due to the operation or failure of the pump system.

D4-05.12 Non-Gravity Systems (Pumps) for Properties where 100% Lot Coverage is Allowed by the City's Land Use Code

The pump system shall not be used to circumvent any code, engineering standard, or permit condition. The construction and operation of the pump system shall not violate any other City requirements.

Pump systems shall be owned operated, maintained, repaired, and replaced (as needed) by property owner(s) served by such system.

Storm detention facilities with flow restrictors shall be installed upstream and discharge by gravity to the pump system.

The pump system shall have a minimum of two pumps with emergency on-site, back-up power supply and an external alarm system for system failure and high water level indicator. The pump chamber shall be sized no greater than a 5-minute on/off cycle time for one pump, however, the pump chamber shall not be larger than 1,000 gallons. The total pump capacity shall not exceed the design flow rate for the 1-year, 24 hour storm. All installation work for the pump, electrical connections, and piping will require applicable building, electrical and plumbing permits.

The pump system force main shall connect into the top of a private storm drain pipe or connect to a private catch basin and gravity flow to the public stormwater system. Direct pressure discharge to a gutter, ditch, or stream shall not be allowed.

No public drainage shall be conveyed to the private pumped system.

A maintenance and Operation Schedule shall be prepared and submitted for review prior to UE acceptance and building occupancy.

A note on the approved plan shall stipulate that the private property owner(s) shall be responsible for any and all claims for injuries and damage due to the operation or non-operation of the pump system.

D4-06 MANHOLES, CATCHBASINS AND INLETS

D4-06.1 General

- Stormwater inlets in a roadway shall be located in the curb line and shall be fitted with bolt locking vaned grates.
- A through-curb inlet frame shall be used where conditions limit the effectiveness of a flat grate inlet. Examples of such conditions are where a high likelihood of clogging from leaf fall or other debris exists, in sag vertical curves, intersection curb returns, and when the structure is a surface drainage end point, such as in a cul-de-sac.
- Bi-directional vaned grates shall be used in sag vertical curves.
- All manhole covers shall be set flush with ground surface, except where otherwise designated by the Utility. Manholes in unpaved areas and easements shall have bolt-locking covers. All manholes in paved areas and sidewalks shall have standard, non-bolt locking covers.
- Vertical ladders or steps shall be installed immediately under the cover or grate opening to a walkable surface on all structures exceeding four feet deep to the pipe invert.
- All manholes, catch basins, inlets and or other concrete structures shall be precast. If precast is not an option, cast-in-place structures require submitted and stamped drawings by the Design Engineer to the City.
- All manholes, catch basins, inlets and lids shall be designed for H-20 loading.

D4-06.2 Spacing Requirements

Table 4.10 Pipe Sizes And Lengths Between Structures

Upstream Structure To Downstream Structure	Pipe Diameter (Inches)	Minimum Pipe Slope (%)	Maximum Structure Spacing (ft)
Inlet/MH to Inlet/MH	12	2.0%	150-300 (i, iii)
Inlet/MH to CB	8	2.0%	100 (v)
Inlet/MH to CB	12	1.0%	150 (v)
CB to CB	8	1.0%	150-300 (ii, iii,v)
CB to CB/MH	12 or greater	0.5%	150-300 (iii,v)
MH to MH	12 or greater	0.5%	400 (iv)

i. Compensatory catchment must be provided in downstream, on-site catch basin(s).

ii. Driveways, parking lots, and private systems only.

iii. Maximum spacing between grates shall be:

- 150 feet on surface grades less than 1%; and
- 200 feet on surface grades from 1% to 3%; and
- 300 feet on surface grades over 3%; or
- as required by grate flow capacities.

iv. Access points only - no stormwater inputs.

v. A type 2 catch basin is required to be installed for every 800 linear feet of storm drain pipeline.

Table 4.11 Allowable Structures And Pipe Sizes

Structure Type (i)	Maximum Pipe Diameter	
	SOLID WALL PIPE *HDPP, PVC, DI, CMP (v), CPE*	PROFILE WALL PIPE *RCP, CPE*
Concrete Inlet (ii iii)	12 inch	12 inch
Type I CB (ii)	15 inch	12 inch
Type I L CB (iv)	24 inch	18 inch
Type 2 - 48 inch diam.	30 inch	24 inch
Type 2 - 54 inch diam.	36 inch	30 inch
Type 2 - 60 inch diam.	48 inch	36 inch
Type 2 - 72 inch diam.	54 inch	42 inch
Type 2 - 84 inch diam.	60 inch	54 inch
Type 2 - 96 inch diam.	72 inch	72 inch

i. Catch basins, manholes, and inlets including steps, ladders, and handholds shall conform to COB Standard Details.

ii. Maximum four (4) vertical feet allowed between grate/cover and pipe invert elevation.

iii. Limited to one inletting pipe, 6 inches or less in diameter.

iv. Maximum five (5) vertical feet allowed between grate/cover and pipe invert elevation.

v. CMP allowed for detention pipe only.

The number and size of pipes that may be connected to any one structure is limited in order to maintain the integrity of the structure. For angled connections or those with several pipes on the same plane, a larger structure than set forth in the Table 4.11 above may be required. For structural integrity, minimum undisturbed wall (edge of pipe opening to edge of pipe opening) shall be 8-inches. For 72-inch and 96-inch diameter structures, the minimum undisturbed wall between openings is 12 inches. The Director may require detailed plans of structures with multiple pipes or angled connections to review proper structure selection.

D4-06.3 Maintenance Access

Where no direct maintenance vehicle access from a maintenance access road can be provided or when greater than 15 feet from a roadway, all structures shall be channelized and shall not have catchment. Provide an oversized catch basin to compensate for lost catchment at the first available access point for maintenance vehicles.

The maximum manhole spacing on conveyance pipelines which do not have any stormwater inlets shall be 400 feet.

Manholes, catch basins or inlets in easements shall be constructed to provide a stable, level grade for a minimum radius of 3 feet around the center of the access opening.

D4-07 PIPE COVERINGS AND ENCASEMENT

A1. Pipeline Encasement and Crossing 1

Stormwater pipelines shall be encased in a steel or class 52 ductile iron casing when crossing under improvements (e.g. retaining walls) where the ability to remove and replace pipe without disturbance to the improvement is needed. Casing is required when:

- Crossing under rockeries over four (4)-feet-high (measured from the bottom of the base rock to top of wall);
- Crossing under retaining wall footings over five (5)-feet-wide;
- Crossing under segmental block, crib, and reinforced earth-type retaining walls; and
- Crossing through retaining walls and pipe is buried.

Casings shall extend beyond the facing, footing and backfill reinforcement zone a minimum of five (5) feet or a distance equal to the depth of the pipe whichever is greater. The carrier pipe shall be supported by casing spacers when the casing length exceeds 10 feet. Where casing spacers are not used, the carrier pipe shall be more than 10 feet in length (no pipe joints inside casing).

If the cover is less than 3 feet between the bottom of footing or base rock, a casing is required regardless of wall height.

A2. Pipeline Encasement and Crossing 2

PVC pipe shall be encased in a steel or ductile iron casing when crossing under improvements where the ability to remove and replace pipe without disturbance to the improvement is needed. Casings are required when:

- Crossing under rockeries over 4-feet-high.
- Crossing under retaining wall footings over 4-feet-wide.
- Crossing under reinforced earth retaining walls (both wall and reinforcing material).

Casings shall extend a minimum of 5 feet past each edge of the improvement, or a distance equal to the depth of pipe, whichever is greater. The carrier pipe shall be supported by casing spacers where casing length exceeds 10 feet.

Minimum clearance between bottom of rockery and top of pipe or casing shall be 2 feet. The trench shall be backfilled with crushed rock.

B. Pipe Cover for Culverts and Underground Detention Systems

For high density polyethylene pipe (AASHTO M 294 Type S), the maximum fill depth is 15 feet measured to the top of the pipe.

For Polyvinyl chloride pipe (profile and solid wall), the maximum fill depth is 20 feet.

For reinforced concrete pipe, the maximum fill depth is 15 feet for class III pipe and 25 feet for class V pipe.

For pipes greater than 25 feet, pipe type shall be determined on a case-by-case basis with back up calculations provided by the Designer.

Minimum cover is 2 feet from the top of pipe to the finished grade or as recommended in writing by the manufacturer, whichever is greater.

For installations where minimum cover requirements cannot be met, use Ductile Iron (DI), Class 52 pipe.

C. Pipe Cover for Storm Drains

For corrugated polyethylene (CPE) pipe (AASHTO M 294 Type S), the maximum fill depth is 15 feet measured to the top of the pipe.

For Polyvinyl chloride pipe (profile and solid wall), the maximum fill depth is 25 feet.

For reinforced concrete pipe, the maximum fill depth is 15 feet for class III pipe and 25 feet for class V pipe.

For depths of cover greater than 25 feet, pipe type shall be determined on a case-by-case basis with back up calculations provided by the Designer.

Minimum cover is 2 feet from the top of pipe to the finished grade or as recommended in writing by the manufacturer, whichever is greater.

Depth of cover over PVC pipe shall be 3 feet minimum and 20 feet maximum. Pipe depths outside this range will require use of ductile iron (DI), Class 52 pipe, or pressure class PVC conforming to C900 or AWWA C905.

For corrugated polyethylene tubing (CPT), the maximum soil cover is one (1) foot.

All buried ductile iron pipe shall be encased in 8-mil polyethylene per AWWA C105.

END OF CHAPTER D4

CHAPTER D5 – BMP DESIGN

TABLE OF CONTENTS

Not included in draft document.

DRAFT

CHAPTER D5 – STORMWATER BMP DESIGN

D5-01 PURPOSE OF THIS CHAPTER

This chapter presents approved methods, requirements, criteria, details, and general guidance for selection, analysis and design of On-site Stormwater Management, Flow Control, and Water Quality Treatment BMPs. These BMPs are designed to reduce the flow rates or volumes of stormwater runoff and/or reduce the level of pollutants leaving the project site. In accordance with provisions of the BCC 24.06.065, additional BMPs beyond those specified in these Standards may be required.

D5-02 ORGANIZATION OF THIS CHAPTER

The remainder of this chapter is organized as follows:

- Section D5-03.1 - Describes the steps required to select appropriate BMPs after the minimum requirements (MR) for On-site Stormwater Management (MR #5), Flow Control (MR #7), and/or Runoff Treatment (MR #6) have been determined using Chapter D1. This section is organized into the following sub-sections:
    - Section D5-03.1 provides information on how to determine if dispersion is a feasible stormwater management practice for the project.
    - Section D5-03.2 provides information on how to determine if infiltration is a feasible stormwater management practice for the project.
    - Section D5-03.3 discusses the process for selecting On-site Stormwater Management BMPs to satisfy MR #5. See also the LID BMP Infeasibility Criteria in Appendix D-9, which shall be evaluated and documented as part of the Site Assessment and Planning Packet submittal per Chapter D2.
    - Section D5-03.4 discusses the process for selecting Water Quality Treatment BMPs to satisfy MR #6.
    - Section D5-03.5 discusses the process for selecting Flow Control BMPs to satisfy MR #7.
- Section D5-04 provides descriptions and criteria for designing BMPs to meet the On-site Stormwater Management, Water Quality Treatment, and Flow Control requirements of the project. This section is intended to be used in conjunction with several other relevant design manuals and appendices to these Standards, which are referenced where appropriate, including:
    - *Stormwater Management Manual for Western Washington* (DOE Manual) by the Washington State Department of Ecology Water Quality Program, amended December 2014.
    - *Low Impact Development Technical Guidance Manual for Puget Sound* (LID Technical Guidance Manual) by Puget Sound Partnership and WSU Extension Center, Puyallup, Washington, December 2012.

- *Western Washington Low Impact Development (LID) Operations and Maintenance (O&M)*, by the Washington State Department of Ecology Water Quality Program, May 2013.
- *Rain Garden Handbook for Western Washington Homeowners* (Rain Garden Handbook) by the Pierce County Extension of Washington State University, June 2007.
- *Guidance for Underground Injection Control Wells that Manage Stormwater* by the Washington State Department of Ecology, 2006.
- Appendix D-10 provides requirements and standards to be used for subsurface characterization and infiltration testing.
- Appendix D-9 provides LID BMP infeasibility criteria.

D5-03 BMP SELECTION

This section describes the steps for selecting appropriate stormwater BMPs and is organized into the following five sections:

- Section D5-03.1 – Determine Dispersion Feasibility
- Section D5-03.2 – Determine Infiltration Feasibility
- Section D5-03.3 – Select BMPs for On-site Stormwater Management
- Section D5-03.4 – Select BMPs for Flow Control
- Section D5-03.5 – Select BMPs for Water Quality Treatment

Since dispersion and infiltration BMPs can serve multiple functions (On-site Stormwater Management, Flow Control, or Water Quality Treatment), the process for evaluating feasibility for these types of BMPs shall be conducted first. Following the dispersion and infiltration feasibility determination are specific steps related to MR #5-7 (On-site Stormwater Management, Flow Control, and Water Quality Treatment).

Note that one, two, or all three of these minimum requirements may apply. Also note that MR #1-4 and MR #8 and 9 may also apply. See Chapter D1 – General Requirements to determine which minimum requirements apply to the project and the standards for complying with all minimum requirements.

D5-03.1 Determine Dispersion Feasibility

Dispersion BMPs include full dispersion, sheet flow dispersion, and concentrated flow dispersion. The following two steps for determining dispersion feasibility are outlined in the subsequent sections:

- *Step 1* – Evaluate flow path requirements and site constraints.
- *Step 2* – Evaluate use of dispersion to meet minimum requirements.

D5-03.1.1 Step 1 - Evaluate flow path requirements and site constraints

Assess flow path requirements and site constraints to determine dispersion feasibility for the site, as follows:

Flow Path Requirements

Dispersion BMPs have minimum requirements for a vegetated flow path that can be difficult to achieve on sites with limited space, such as in urban environments. Assess the following:

- Full Dispersion – The flowpath shall be directed over a minimum of 100 feet of vegetation.
- Sheet Flow Dispersion – The flowpath shall be directed over a minimum of 10 feet of vegetation.
- Concentrated Flow Dispersion, Trench Downspout Dispersion and Splashblock Downspout Dispersion – The flowpath shall be directed over a minimum of 25 feet of vegetation.

Site Constraints

- Steep Slope or Landslide-prone Areas – The dispersion flow path is not typically permitted within landslide hazard areas (BCC 20.25H.120. A.1), steep slopes (BCC 20.25H.120.A), or within a setback of 10 times the height of the steep slope to a maximum of 500 feet above a steep slope area.
- Septic Systems and Drain Fields – The dispersion flow path is not permitted within 50 feet of a proposed or existing septic system or drain field.
- Contaminated Sites and Landfills – The dispersion flow path is not permitted within 100 feet of a contaminated site or landfill (active or closed).

D5-03.1.1 Step 2 - Evaluate use of dispersion to meet minimum requirements

If dispersion is considered feasible for the site, evaluate the feasibility of individual dispersion BMPs from Chapter 5, Volume V of the DOE Manual when selecting BMPs for on-site stormwater management (Section D5-03.3), water quality (Section D5-03.4), and flow control (Section D5-03.5).

D5-03.2 Determine Infiltration Feasibility

This section provides step-by-step procedures for evaluating the feasibility of infiltration for a site and determining design infiltration rates for facility design. Each of the following steps is outlined in more detail in the sections that follow:

- *Step 1* – Review the City of Bellevue Infiltration Potential Map.
- *Step 2* – Evaluate horizontal setbacks and site constraints.
- *Step 3* – Conduct geotechnical/soils investigations and evaluate vertical separation requirements.
- *Step 4* – Conduct infiltration testing.
- *Step 5* – Determine design infiltration rate.

- *Step 6* – Conduct groundwater monitoring, receptor characterization, and mounding analysis, if applicable.
- *Step 7* – Evaluate use of infiltration to meet minimum requirements.

Seasonal timing for geotechnical/soils investigations, infiltration testing and groundwater monitoring requirements for infiltration facilities can impact project schedules. Subsurface investigations shall be scheduled during the wet season, between December and March, whenever possible.

The Developer may choose to perform Steps 3 through 6 concurrently, or in series. Larger projects may benefit from consulting with a licensed professional early in project development. Refer to Figure 5.1 for a flowchart illustrating these steps for completing an infiltration feasibility assessment.

D5-03.2.1 Step 1 - Review City of Bellevue Infiltration Potential Map

The first step in determining infiltration feasibility is review of the City's existing Infiltration Potential Map, available on the City's website. If the project site is infeasible for infiltration based on this map, further infiltration investigations are not required, except in portions of the site where the exception noted below applies.

An applicant may still elect to investigate infiltrating BMPs, but this is not required. Refer to Figure 5.1 for additional details.

Exception: For portion of site within 50-foot buffer from base of slopes 25 percent or steeper, infiltration may be feasible; proceed to Step 2. Also, for portion of site not mapped as infeasible on the Infiltration Potential map; proceed to Step 2 for that portion of the site.

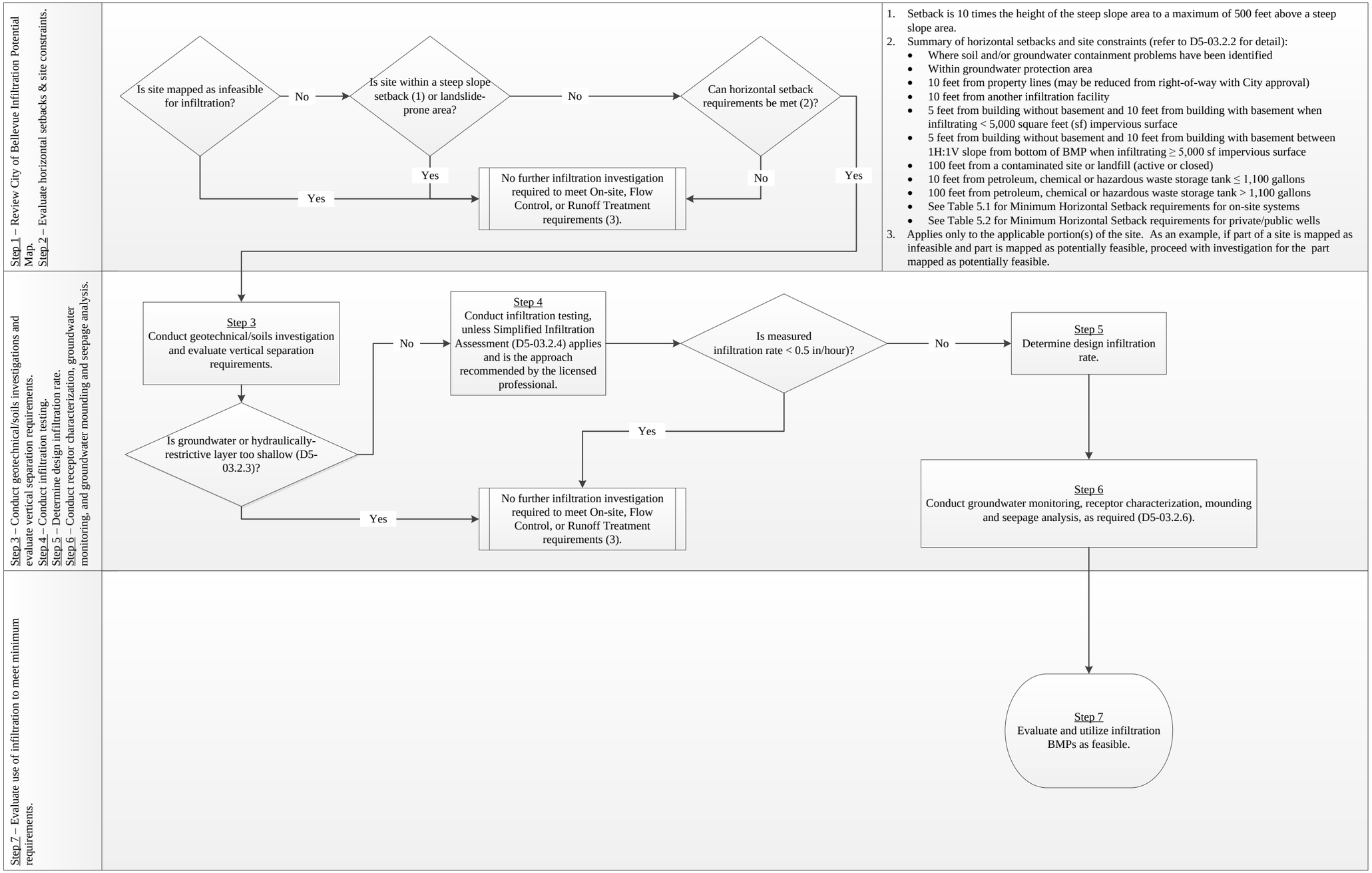

Figure 5.1 – Infiltration Feasibility Flow Chart

This page left intentionally blank.

D5-03.2.2 Step 2 - Evaluate Horizontal Setbacks and Site Constraints

Assess horizontal setbacks and site constraints to determine infiltration feasibility for the site, as follows:

Horizontal Setbacks

For infiltration bioretention and rain gardens, horizontal setbacks are measured from the vertical extent of the cell or basin (e.g., top of the bioretention soil). For infiltration chambers, horizontal setbacks are measured from the outside bottom of the structure. For all other infiltration BMPs, horizontal setbacks are measured from the edge of the aggregate within the BMP.

Infiltration is not permitted in the following areas:

- Within 10 feet of property lines (may be reduced from right-of-way with City approval).
- Within 10 feet of another infiltration facility.
- Within the following setbacks from on-site and off-site structures:
    - When runoff from less than 5,000 square feet of impervious surface area is infiltrated on the site, the infiltration BMP shall not be within 5 feet from a building without a basement, and/or 10 feet from a building with a basement.
    - When runoff from 5,000 square feet or more of impervious surface area is infiltrated on the site, a building shall not intersect with a slope 1 Horizontal to 1 Vertical (1H:1V) from the bottom edge of an infiltration BMP. The resulting setback shall be no less than 5 feet from a building without a basement and/or 10 feet from a building with a basement. For setbacks from buildings or structures on adjacent lots, potential buildings or structures shall be considered for future build-out conditions.

Site Constraints

- Steep Slope or Landslide-Hazard Areas – Infiltration is limited within landslide-prone areas or within a setback of 10 times the height of the steep slope to a maximum of 500 feet above a steep slope area. Infiltration within this area may be feasible provided a detailed slope stability analysis is completed by a licensed engineer or engineering geologist. The analysis shall determine the effects that infiltration would have on the landslide-prone or steep slope area and adjacent properties.
- Septic Systems and Drain Fields – See Table 5.1 for infiltration setback requirements to on-site sewage systems.
- Drinking Water Supply Wells or Springs – See Table 5.2 for infiltration setback requirements to private and public wells.
- Contaminated Sites and Landfills –
    - Within 100 feet of a contaminated site or landfill (active or closed).
    - For projects where runoff from 5,000 square feet or more of impervious surface area will be infiltrated on the site, infiltration within 500 feet up-gradient or 100 feet down-gradient of a contaminated site or landfill (active or closed) requires analysis and approval by a licensed hydrogeologist.

- Where soil and/or groundwater contamination problems have been identified, including, but not limited to, the following:
  - EPA Superfund Program site list (www.epa.gov/superfund/sites/index.htm)
  - EPA Resource Conservation and Recovery Act (RCRA) Program site list (www.epa.gov/epawaste/hazard/correctiveaction/facility/index.htm)
  - EPA mapping tool that plots the locations of Superfund and RCRA-regulated sites (www2.epa.gov/cleanups/cleanups-my-community)
  - Ecology regulated contaminated sites (www.ecy.wa.gov/fs)
  - Ecology Toxics Cleanup Program website (www.ecy.wa.gov/cleanup.html)

- Underground or Above Ground Storage Tanks –
  - Within 10 feet of an underground or above ground storage tank or connecting underground pipes when the capacity of the tank and pipe system is 1,100 gallons or less. (Applicable to tanks used to store petroleum products, chemicals, or liquid hazardous wastes.)
  - Within 100 feet of an underground or above ground storage tank or connecting underground pipes when the capacity of the tank and pipe system is greater than 1,100 gallons. (Applicable to tanks used to store petroleum products, chemicals, or liquid hazardous wastes.)

Table 5.1 – Minimum Horizontal Setback Requirements between Stormwater Control Devices and On-site Sewage System (OSS) Components

Location (with Respect to OSS Components) and Type of Stormwater Control Device [a,b]	Edge of OSS Primary or Reserve Soil Dispersal Area (Feet)	Edge of OSS Sewage Tank or Treatment Tank (Feet)
UPGRADIENT		
Individual Lot Infiltration System	30	30
Individual Lot Dispersion System	30	30
Individual Lot Rain Garden	30	10
Individual Lot Downspout Splash Blocks	10	10
DOWN- OR SIDE-GRADIENT		
Individual Lot Infiltration System	10	10
Individual Lot Dispersion System	10	10
Individual Lot Rain Garden	30	10
Individual Lot Downspout Splash Blocks	10	10
UP-, DOWN-, OR SIDE-GRADIENT		
Regional Infiltration Facility	100	100
Unlined Detention Ponds	30	30

Notes:

a. As measured from closest edge of stormwater control device.

b. Discharge point(s) and flow path(s) shall be directed away from or around OSS.

Table 5.2 – Minimum Horizontal Setback Requirements Between Stormwater Control Devices and Private/Public Wells

Stormwater Control Device [a]	Private Well (Feet)	Public Well (Feet)
Individual Lot Infiltration System	100	100
Individual Lot Dispersion System	100	100
Individual Lot Rain Garden	100	100
Individual Lot Downspout Splash Blocks	50	50
Unlined Detention Ponds	100	100
Regional Infiltration Facility	100	100

Note:

a. Discharge point(s) and flow path(s) shall be directed away from wells.

D5-03.2.3 Step 3 - Conduct Geotechnical/Soil Investigations and Evaluate Vertical Separation Requirements

Geotechnical/soil investigations are required in this step to evaluate the suitability or infeasibility of the site for infiltration, help establish the basis for determining an infiltration rate for design (Steps 4 and 5), and help evaluate the potential for subsurface drainage issues (Step 6), slope stability, foundation capacity, and other geotechnical design information needed to design and assess constructability of proposed infiltration facilities.

The Geotechnical/Soils Report shall be prepared by a licensed professional. The licensed professional may be a licensed professional engineer with geotechnical expertise or a licensed geologist, hydrogeologist, engineering geologist, registered in the State of Washington. Refer to Section D2-06.5 – Geotechnical/Soils Reports for detailed submittal requirements.

The geotechnical/soils investigation shall be conducted in accordance with Appendix D-10 and shall include at a minimum test pits or borings to identify soil types, soil characteristics, and vertical separation requirements (i.e., depth to low permeability layers (bedrock or hardpan) or maximum wet season groundwater level) and estimates of the initial saturated hydraulic conductivity (Ksat, initial) of the native soil, characterize the infiltration receptor horizon and comment on potential for lateral drainage impacts.

The depth and number of test holes or test pits, and samples should be increased, if in the judgment of the licensed professional, the conditions are highly variable and such increases are necessary to accurately estimate the performance of the infiltration system. The exploration program may also be decreased if, in the opinion of the licensed professional, the conditions are relatively uniform and the borings/test pits omitted will not influence the design or successful operation of the facility.

Where exploration information will be used for infiltration design (as opposed to demonstrating infeasibility), the basis for seasonal high groundwater level if not encountered at the time of exploration shall be described in the Geotechnical/Soils Report (Chapter D2).

Investigations shall be performed at the location of the proposed facility or as close as possible, but no more than 50 feet away. In high water table sites, the subsurface exploration sampling need not be conducted lower than two (2) feet below the groundwater table.

The City may require additional explorations conducted during the wet season (December to March), seasonal water level monitoring conducted prior to construction, and/or deeper explorations to adequately demonstrate thicker sequence of permeable soil. The City may also require additional explorations, deeper explorations, and/or larger separations based on past experience in proposed project area.

A determination of infiltration infeasibility may be approved if the Geotechnical/Soils Report (Chapter D2) documents that groundwater seepage or a hydraulically-restrictive material is encountered within 5 feet of the base of the proposed infiltration facility, or shallower depths for bioretention, downspout full infiltration systems, and permeable pavement as follows:

- General - The base of all infiltrating BMPs shall be at least 5 feet (with reductions allowed for certain smaller BMPs) above the seasonal high-water mark, bedrock (or hardpan), or other low permeability layer.
- Downspout Full Infiltration Systems – 3-foot minimum separation from the bottom of the system to the low permeability layers (bedrock or hardpan) or 1-foot separation from the bottom of the system to the seasonal high-water mark, per BMP T5.10A in the DOE Manual.
- Bioretention – 1 foot or 3-foot minimum separation from the bottom of a bioretention installation, depending upon the drainage area size (per BMP T7.30 - Infeasibility Criteria in the DOE Manual).

- Permeable Pavement – 1-foot below the bottom of the base course for a permeable pavement (per BMP T5.15 – Infeasibility Criteria in the DOE Manual).

D5-03.2.4 Step 4 - Conduct Infiltration Testing

For sizing of Roof Downspout Infiltration Systems on sites with soil types that meet the conditions specified below, a Simplified Infiltration Assessment may be conducted in lieu of infiltration testing. Other projects shall use the Standard Infiltration Assessment procedures detailed below.

Simplified Infiltration Assessment (limited application)

The simplified infiltration assessment may be approved for sizing Roof Downspout Infiltration Systems (Chapter D5-04.4.7B) if the Geotechnical/Soils Report (Chapter D2) adequately demonstrates the existing native soils meet the following 3 conditions:

- Medium-grained or coarser outwash type soils (i.e., those Type A and Type B soils meeting USDA soil texture classes ranging from coarse sand and cobbles to medium sand);
- Greater than 3 feet in thickness; and
- Shallow groundwater is not encountered.

If these conditions exist, simplified facility sizing can be used to size Roof Downspout Infiltration Systems per Chapter D5-04.4.7B, and no additional infiltration testing is required to support sizing of this particular type of facility.

If soils do not meet the above conditions, or for design of other infiltration BMPs, the Standard Infiltration Assessment is required, as detailed below.

Standard Infiltration Assessment

Standard infiltration design documentation includes subsurface exploration, field infiltration testing, selection of a design infiltration rate, and evaluating the feasibility and design considerations to support design of selected infiltration BMPs.

Two methods of field infiltration testing are allowed to determine the measured infiltration rate:

- Large Pilot Infiltration Test (Large PIT)
- Small PIT

The Large PIT is the preferred method for estimating the measured (initial) saturated hydraulic conductivity (Ksat) of the soil profile beneath the proposed infiltration facility. The Large PIT reduces some of the scale errors associated with relatively small-scale double ring infiltrometer or “stove-pipe” infiltration tests. It is not a standard test but rather a practical field procedure recommended by Ecology’s Technical Advisory Committee.

A Small PIT can be substituted for the Large PIT in any of the following instances.

- The drainage area to the infiltration site is less than 1 acre;
- The testing is for the LID BMP’s of bioretention or permeable pavement that either serve small drainage areas and /or are widely dispersed throughout a project site;

- The site has a high infiltration rate, making a Large PIT difficult; or
- The site geotechnical/soils investigation suggests uniform subsurface characteristics.

The type of infiltration test required for a project is provided in Table 5.3, while the required procedures that shall be used for Small and Large PITs are provided in the DOE Manual, Volume III, Section 3.3.6. Refer to Chapter D2 – Submittal Requirements for data, calculation, and reporting requirements for the Geotechnical/Soils Report.

For portions of the site where the measured infiltration rate is less than 0.5 inches per hour, no further infiltration feasibility evaluation is required.

Table 5.3 – Summary of Minimum Testing and Analysis Requirements for Infiltration BMPs, Steps 4 and 6[a].

Hard Area Infiltrated on the Project Site	Step 4		Step 6			
	Infiltration Testing		Groundwater Monitoring		Characterization of Infiltration Receptor	Groundwater Mounding & Seepage Analysis
	Minimum Number	Type	Minimum Number of Wells	Duration & Frequency		
< 1 acre	Sites subject to MR #1-5 (only) For bioretention and permeable pavement facilities, at least 1 per 5,000 ft2 of BMP infiltration surface area or at least one per 200 lineal feet (in no case less than one per facility).	Small or Large PIT [b]	1, unless groundwater proven to be > 10 feet below base of proposed facility	Throughout 1 wet season	Required	Recommended when seasonal high groundwater level is < 10 feet below facility base [d]
≥ 1 acre	Sites subject to MR #1-9 For bioretention, permeable pavement and infiltration basins, at least 1 per 5,000 ft2 of BMP infiltration surface area (in no case less than two per facility). For bioretention swales, linear permeable pavement installations, and infiltration trenches, at least one per 200 feet of trench length (in no case less than two per trench).		1 to 3 [c]	Monthly for at least 1 year [c]		Required [e]

Notes:

a. Deviations from the minimum requirements in this table, when recommended and documented by the licensed professional, may be approved by the Director. If the licensed professional determines continuity or subsurface materials based on site investigations or if acceptance testing will be done during construction, then fewer tests may be approved. Designs for infiltration facilities shall provide allowances for review and update during construction if site conditions differ than assumed during design or if the acceptance test during construction determines that the infiltration rate is lower than assumed for the design.

b. The Large Pit is the preferred testing method, but the Small Pit may be used when:
   i. Drainage area < 1 acre;
   ii. The testing is for bioretention or permeable pavement that either serve small drainage areas and /or are widely dispersed throughout a project site;

iii. The site has a high infiltration rate, making a Large PIT difficult; or

iv. The site geotechnical/soils investigation suggests uniform subsurface characteristics.

c. One (1) well is required to establish depth to seasonal high groundwater. Three (3) wells are required where the depth to the seasonal high groundwater elevation or hydraulically-restrictive material is less than 15 feet below the bottom of the proposed infiltration facility, or if site is larger than 10 acres. If the groundwater in the area is known to be greater than 50 feet below the proposed facility and the site is located greater than 500 feet from a steep slope or designated landslide hazard area, groundwater monitoring is not required.

d. Groundwater Mounding and Seepage Analysis recommended for smaller projects (< 1 acre hard surface area infiltrated on the project site) for sites with seasonal high groundwater or hydraulically-restrictive material within 10 feet of the bottom of the proposed facility.

e. Groundwater Mounding and Seepage Analysis required for larger projects (≥ 1 acre hard surface area infiltrated on the project site) for sites with seasonal high groundwater or hydraulically-restrictive material within 15 feet of the bottom of the proposed infiltration facility.

D5-03.2.5 Step 5 - Determine Design Infiltration Rate

The measured infiltration rate determined in Step 4 shall be reduced using correction factors to account for site variability and the number of tests conducted, uncertainty of the test method, and potential for long-term clogging due to siltation and bio-buildup. The corrected infiltration rate is considered the long-term or design infiltration rate and is used for all infiltration BMP sizing calculations. Methodology for determining correction factors is provided in Appendix D10. Refer also to the text below regarding lateral drainage and groundwater mounding which may affect the design infiltration rate.

D5-03.2.6 Step 6 - Conduct Receptor Characterization, Groundwater Monitoring, and Mounding Analysis

The unsaturated and saturated soil receiving the stormwater is the stormwater infiltration receptor horizon. For all infiltrating BMPs regardless of size, receptor characterization shall include a discussion of the impact of stormwater infiltration in terms of the potential for groundwater mounding, vertical and lateral drainage tendencies and the discharge point or area of the infiltrating water.

Larger projects, projects where shallow groundwater or hydraulically-restrictive layers are a concern, or projects requesting a reduction in vertical separation requirements shall conduct seasonal groundwater level monitoring and groundwater modeling to assess groundwater mounding and the design infiltration rate as discussed herein. Refer to Table 5.3 for groundwater level monitoring and modeling requirements.

Groundwater Protection

Evaluate the native soils for determination of groundwater protective characteristics to demonstrate infiltration feasibility for permeable pavement BMPs or where treating pollutant-generating surfaces. Methodology for evaluation is provided in the DOE Manual, Volume III, Section 3.3.7, SSC-6 Soil Physical and Chemical Suitability for Treatment. Alternatively, in these instances, the City has the option of requiring a media layer meeting the soil suitability criteria or the sand filter specification in the DOE Manual as a condition of construction, or equivalent.

Lateral Drainage Considerations

Infiltration on slowly draining soils can result in unintended creation of lateral subsurface flow (interflow) toward nearby building foundations, basements, roads, parking lots or sloping sites. The soil investigation shall include a detailed description of the condition of the upper soil structure, including the pathway the discharged stormwater will take and the potential for lateral drainage, potential for impacting nearby structures, and risk mitigation strategies, as appropriate.

Groundwater Monitoring

If the seasonally high groundwater elevation is demonstrated to be greater than 50 feet below the bottom of the proposed facility and the site is located greater than 500 feet from the base of a steep slope or landslide hazard area, groundwater monitoring is not required. Otherwise, refer to Table 5.3 for the applicable groundwater monitoring requirements.

Groundwater Mounding & Seepage Analysis

Groundwater mounding and seepage analysis shall be conducted for sites with 1 acre or more of hard surface area infiltrated on-site, and where the depth to the seasonal high groundwater elevation or hydraulically-restrictive materials is less than 15 feet below the bottom of the proposed infiltration facility. Further, a groundwater mounding analysis is recommended for smaller sites (with less than 1 acre of hard surface area infiltrated on the project site) if the depth to seasonally high groundwater elevation or hydraulically-restrictive materials is less than 10 feet from bottom of the proposed infiltration facility. Methodology for evaluation is provided in the DOE Manual, Volume III, Section 3.3.8.

Where applicable, results from a groundwater mounding analysis can potentially be used to support reduction in vertical separation requirements.

D5-03.2.7 Step 7 - Evaluate Use of Infiltration to Meet Minimum Requirements

If infiltration is not determined to be infeasible based on the above steps, evaluate the feasibility of specific infiltration BMPs when selecting for On-site Stormwater Management (Section D5-03.3), Water Quality (Section D5-03.4), and Flow Control (Section D5-03.5).

The City may require additional studies to assess the potential for off-site groundwater level impacts from infiltration. These additional studies could potentially include seasonal water level monitoring, field infiltration testing during the wet season, additional subsurface exploration, groundwater modeling, groundwater quality analysis, groundwater quality sampling, and/or acceptance testing.

D5-03.3 Select BMPs for On-site Stormwater Management

If MR #5 - On-site Stormwater Management is triggered, it can be met by using the List approach or the LID Performance Standard approach. Refer to Chapter D1-04.2 for a detailed discussion of these approaches and their applicability based on project size and thresholds.

For both approaches, selection of BMPs shall build upon site assessment and planning information described in Chapter D1-02 and the more detailed feasibility analysis described above in Sections D5-03.1 and D5-3.2. If the project triggers Minimum Requirement #7 - Flow Control and MR #6 - Runoff Treatment requirements in addition to On-site Stormwater Management Requirements, refer to Sections D5-03.4 and D5-03.5 for additional discussion of BMP selection.

D5-03.3.1 On-site List Approach

If the MR #5 - On-site Stormwater Management Requirement is triggered (refer to Chapter D1-04.2) and the On-site List Approach is selected as the method for compliance, follow the steps presented below to select the appropriate BMP(s) for a given project.

Step 1: Determine if Dispersion and Infiltration are Feasible

Refer to Section D5-03.1 and Section D5-03.2.

Step 2: Calculate Areas by Surface Type

For each project type, divide the project area into lawn and landscape areas, roof areas, and other hard surface areas (i.e., driveways, walkways, sidewalks, etc.) with distinct drainage pathways.

Step 3: Identify the Applicable On-site List

Identify whether List #1 or List #2 applies to the project based on the minimum requirements that are triggered. Refer to Chapter D1-04.2 for details on determining which list shall be applied.

Step 4: Evaluate BMPs for Each Surface Type in Order

The On-site BMP lists provided in Chapter D1-04.2 include potential On-site BMPs for different surface types (lawn and landscape, roofs, and other hard surfaces) as identified in Step 2 above. For each surface type, the BMPs shall be considered in the order listed and the first BMP considered feasible shall be used.

Refer to the Section D5-04 for additional requirements that may affect the design and placement of BMPs on the site.

D5-03.3.2 On-site Performance Standard

If the MR #5 - On-Site Stormwater Management is triggered and the LID Performance Standard is the method used for compliance, follow the steps presented below to select the appropriate BMP(s).

Step 1: Determine if Dispersion and Infiltration are Feasible

Refer to Section D5-03.1 and Section D5-03.2.

Step 2: Select BMP(s)

Select a BMP, or multiple BMPs, to meet the LID Performance Standard. Refer to Section D5-04 of this volume for BMP applicability, site suitability, and design criteria. Refer to Table 5.4 for a summary of BMPs that can be designed to satisfy MR #5 – On-site Stormwater Management, as well as MR #6 – Runoff Treatment and MR #7 – Flow Control.

Step 3: Model BMP design

Model the selected BMPs to determine the required sizing to meet the LID Performance Standard using approved hydrologic modeling methods (see Volume III, Chapter 2 of the DOE Manual).

D5-03.4 Select BMPs for Water Quality Treatment

For projects that trigger MR #6 - Runoff Treatment (Section D1-04.2), this section describes the step-by-step process for selecting the type of treatment BMPs that apply to individual projects, as well as the physical site features that can impact BMP selection. This section provides detailed information about BMP selection for the following water quality treatment performance goals: oil control, phosphorus, enhanced, and basic.

Water Quality Treatment BMPs located upstream of Flow Control BMPs can be designed as on-line or off-line BMPs, as follows:

- On-line BMPs – Runoff flow rates in excess of the water quality design flow rate can be routed through the on-line Water Quality Treatment BMP provided that the BMP is sized sufficiently to treat the influent flows to the required level and that velocities are not high enough to resuspend sediments.
- Off-line BMPs – Runoff flow rates in excess of the water quality design flow rate may be bypassed around the off-line Water Quality Treatment BMP. Where feasible, off-line BMPs are required to prevent resuspension and washout of accumulated sediments during storm events. During bypass events, the BMP shall continue to receive and treat all flows up to and including the water quality design flow rate. Only those flows higher than the water quality design flow rate shall be allowed to bypass around the BMP.

In most cases, the engineer may choose whether to design Water Quality Treatment BMPs as on-line or off-line systems, provided they are sized sufficiently to provide the required treatment for the influent flows. However, oil/water separators shall be designed as off-line BMPs in all cases. Water Quality Treatment BMPs located downstream of Flow Control BMPs are generally

considered to be off-line systems, since the influent flows are moderated by the Flow Control BMPs.

If permeable pavement is being used in applications with pollution-generating hard surfaces (e.g., parking lots, roadways, driveways, etc.), and if pre-treatment is not provided, the native soils shall be evaluated to determine whether site suitability criteria for treatment are met. Methodology for evaluation is provided in the DOE Manual, Volume III, Section 3.3.7, SSC-6 Soil Physical and Chemical Suitability for Treatment. Alternatively, in these instances, the City has the option of requiring a six-inch layer of media meeting the soil suitability criteria or the sand filter specification as a condition of construction, or equivalent.

Follow the steps below and in Figure 5.2 to select the appropriate Water Quality Treatment BMPs for a project that triggers MR #6. In addition, MR #5 - On-site Stormwater Management and MR #7 - Flow Control Requirements may apply (refer to Section D5-03.3 and D5-03.5, respectively).

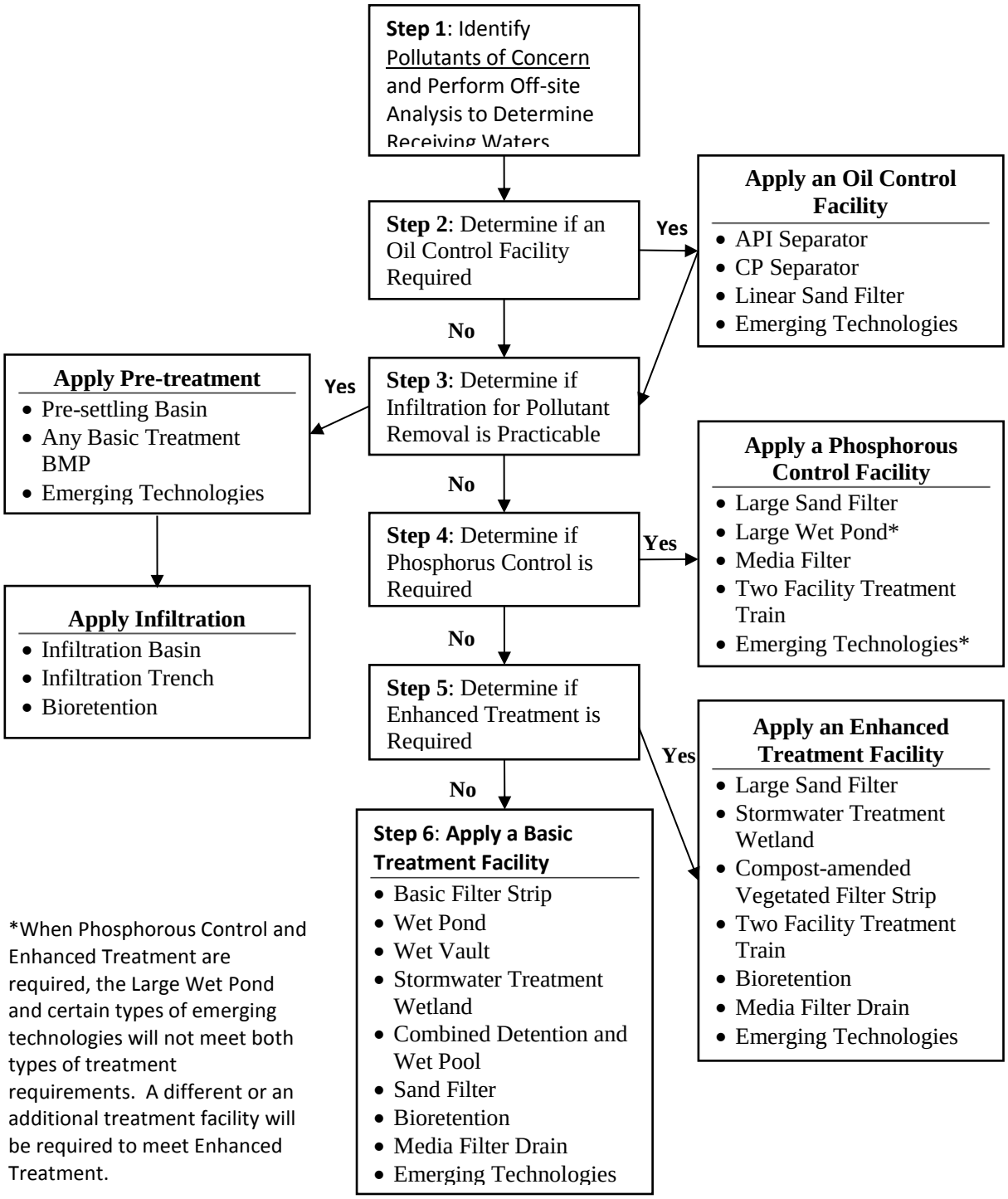

Figure 5.2 – Treatment Facility Selection Flow Chart
Source: Adapted from Figure 2.1.1 in Volume V, DOE Manual.

Step 1: Determine the Receiving Waters and Pollutants of Concern

When identifying the receiving waters and downstream conveyance as part of the minimum requirement determination, specific pollutants of concern that the project must mitigate shall be determined. Such pollutants of concern could be identified in a Watershed or Basin Plan, a Water Clean-up Plan, a Groundwater Management Plan (Wellhead Protection Plan), a Lake Management Plan, or similar.

An analysis of the proposed land use(s) of the project shall also be used to determine the stormwater pollutants of concern. Refer to D1-03 for further discussion on this.

Step 2: Select an Oil Control BMP if Oil Control is Required

The use of oil control devices and facilities is dependent upon the specific land use proposed for development. The Oil Control Menu (see Volume V, Section 3.2 of the DOE Manual) applies to projects that have "high-use sites." High-use sites are those that typically generate high concentrations of oil due to high traffic turnover or the frequent transfer of oil. High-use sites include:

- An area with commercial or industrial uses subject to an expected average daily traffic (ADT) count equal to or greater than 100 vehicles per 1,000 square feet of gross building area.

  Note: Gasoline stations, with or without small food stores, will likely exceed the high-use site threshold.

- An area of a commercial or industrial site subject to petroleum storage and transfer in excess of 1,500 gallons per year, not including routinely delivered heating oil.

  Note: The petroleum storage and transfer criterion is intended to address regular transfer operations such as gasoline service stations, not occasional filling of heating oil tanks.

- An area of a commercial or industrial site subject to parking, storage or maintenance of 25 or more vehicles that are over 10 tons gross weight (trucks, buses, trains, heavy equipment, etc.).

  Note: In general, all-day parking areas are not intended to be defined as high-use sites, and shall not require an oil control facility.

- A road intersection with a measured ADT count of 25,000 vehicles or more on the main roadway and 15,000 vehicles or more on any intersecting roadway, excluding projects proposing primarily pedestrian or bicycle use improvements.

  Note: The traffic count can be estimated using information from "Trip Generation," published by the Institute of Transportation Engineers (http://www.ite.org), or from a traffic study prepared by a professional engineer or transportation specialist with experience in traffic estimation. Refer to the City's website for available traffic count information http://www.bellevuewa.gov/standard_maps.htm.

- The land uses below may have areas that fall within the definition of "high-use sites" and require oil control treatment. Further, these land uses require special attention to the oil

control treatment selected. Refer to Volume V, Section 3.2 of the DOE Manual for more details:

- Industrial machinery and equipment, and railroad equipment maintenance areas
- Log storage and sorting yards
- Aircraft maintenance areas
- Railroad yards
- Fueling stations
- Vehicle maintenance and repair sites
- Construction businesses (paving, heavy equipment storage and maintenance, storage of petroleum products)

Note: All stormwater runoff from hard surface areas subject to motor vehicle traffic shall flow through a spill control (SC-type) oil/water separator prior to surface discharge off-site. Refer to Volume IV of the DOE Manual for additional requirements. Spill control requirements are separate from this treatment requirement.

If oil control is required for the site, refer to the General Requirements in Volume V, Chapter 4 of the DOE Manual. The general requirements may affect the design and placement of facilities on the site (e.g., flow splitting). Then see Volume V, Chapter 11 of the DOE Manual for guidance on the proper selection of options and design details.

Step 3: Select a Phosphorus Treatment BMP if Phosphorus Treatment is Required

The plans, ordinances, and regulations identified in Step 1 and in D1-03 are a good reference to help determine if the subject site is in an area where phosphorus control is required.

Runoff from all project areas tributary to Larsen Lake, Phantom Lake, and Lake Sammamish shall require Phosphorus Treatment, except areas that typically do not generate pollutants. Surfaces that typically do not generate pollutants include roof areas (except uncoated metal roofs) that do not receive organic debris and sidewalks. Such runoff need not be treated and may bypass the phosphorous treatment facility, if feasible.

If phosphorus control is required, select and apply a phosphorus treatment facility. Refer to the Phosphorus Treatment Menu in Volume V, Section 3.3 of the DOE Manual. Select an option from the menu after reviewing the applicability and limitations, site suitability, and design criteria of each for compatibility with the site. If you have selected a phosphorus treatment facility, refer to the General Requirements in Volume V, Chapter 4 of the DOE Manual, as they may affect the design and placement of the facility on the site.

Note: Project sites subject to the Phosphorus Treatment requirement could also be subject to the Enhanced Treatment requirement (see Step 4). In that event, apply a facility or a treatment train that is listed in both the Enhanced Treatment Menu and the Phosphorus Treatment Menu.

Step 4: Select an Enhanced Treatment BMP if Enhanced Treatment is Required

Except where specified under Step 5, Enhanced Treatment for reduction of dissolved metals is required for project sites that:

1. Discharge directly to fresh waters or conveyance systems tributary to fresh waters designated for aquatic life use or that have an existing aquatic life use; or
2. Use infiltration strictly for flow control – not treatment – and the discharge is within ¼ mile of a fresh water designated for aquatic life use or that has an existing aquatic life use:
    - Industrial project sites
    - Commercial project sites
    - Multi-family residential project sites
    - High Annual Average Daily Traffic (AADT) roads as follows:
        - Fully controlled and partially controlled limited access highways with AADT counts of 15,000 or more.
        - All other roads with an AADT count of 7,500 or greater.

Any areas of the above-listed project sites that are identified as subject to Basic Treatment requirements (see Step 5) are not also subject to Enhanced Treatment requirements. Such sites listed above that discharge directly to Lake Washington (Basic Treatment Receiving Waters per Appendix I-C of the DOE Manual, except Lake Sammamish which requires Phosphorus Treatment) via an entirely closed piped conveyance system or via sheet flow from waterfront property are not subject to Enhanced Treatment Requirements.

For developments with a mix of land use types, the Enhanced Treatment requirement shall apply when the runoff from the areas subject to the Enhanced Treatment requirement comprises 50% or more of the total runoff within a threshold discharge area.

Step 5: Select a Basic Treatment BMP

Basic Treatment is required in the following circumstances:

- Project sites that discharge to the ground, unless:
    - The soil suitability criteria for infiltration treatment are met (see Volume III, Chapter 3 of the DOE Manual), and alternative pre-treatment is provided (See Volume V, Chapter 6 of the DOE Manual), or
    - The project site uses infiltration strictly for flow control – not treatment - and the discharge is within ¼-mile of a phosphorus sensitive lake (use the Phosphorus Treatment Menu), or
    - The project site is industrial, commercial, multi-family or a high AADT (consistent with the Enhanced Treatment-type thresholds listed above) and is within ¼ mile of a fresh water designated for aquatic life use or that has an existing aquatic life use (use the Enhanced Treatment Menu).
- Residential projects not otherwise needing phosphorus control in Step 3.

- Project sites discharging directly (or indirectly through a municipal separate storm sewer system) to Lake Washington (Basic Treatment Receiving Waters listed in Appendix I-C of Volume I of the DOE Manual).
- Project sites that drain to fresh water that is not designated for aquatic life use, and does not have an existing aquatic life use; and project sites that drain to waters not tributary to waters designated for aquatic life use or that have an existing aquatic life use.
- Landscaped areas of industrial, commercial, and multi-family project sites, and parking lots of industrial and commercial project sites, dedicated solely to parking of employees' private vehicles that do not involve any other pollution-generating sources (e.g., industrial activities, customer parking, storage of erodible or leachable material, wastes or chemicals). For developments with a mix of land use types, the Basic Treatment requirement shall apply when the runoff from the areas subject to the Basic Treatment requirement comprises 50% or more of the total runoff.

Refer to the Basic Treatment Menu in Volume V, Section 3.5 of the DOE Manual. Select an option from the menu after reviewing the applicability and limitations, site suitability, and design criteria of each for compatibility with the site.

After selecting a Basic Treatment facility, refer to the General Requirements in Volume V, Chapter 4 of the DOE Manual.

D5-03.5 Select BMPs for Flow Control

If MR #7 - Flow Control is triggered, follow the steps presented below to select the appropriate Flow Control BMPs for a given project. In addition, MR #5 - On-site Stormwater Management and MR #6 - Runoff Treatment may apply. Refer to Sections D5-03.3 and D5-0.4 for additional information.

Step 1: Determine if Dispersion and Infiltration are Feasible

Refer to Section D5-03.1 and Section D5-03.2.

Step 2: Determine if Water Quality Treatment requirements also apply

If MR #6 – Runoff Treatment also applies, look for opportunities to use Flow Control BMPs that can also meet treatment requirements (see Section D5-04).

Step 3: Select Flow Control BMP(s)

Select a Flow Control BMP or multiple BMPs. Refer to Section D5-04 for applicability, site suitability, and design criteria. Select Flow Control BMPs that best integrate with On-site Stormwater Management and Water Quality Treatment to the extent feasible. Refer to Table 5.4 for a summary of BMPs that can be designed to satisfy MR #5-7 and Table 5.6 for a summary of BMPs that can be used to satisfy MR #7 – Flow Control only.

Table 5.4 – BMP Applicability for MR #5-7

BMP	DOE Manual Reference	MR #5 - On-site Stormwater Management		MR #6 – Runoff Treatment				MR #7 – Flow Control
		List	LID Performance Standard	Basic	Enhanced	Oil Control	Phosphorus	
Post Construction Soil Quality and Depth	BMP T5.13	X	X					X
Dispersion								
Full	BMP T5.30	X	X					X
Downspout	BMP T5.10B	X	X	X[a]				X
Sheet Flow	BMP T5.12	X	X	X[a]				X
Concentrated Flow	BMP T5.11	X	X	X[a]				X
Rain Gardens	BMP T5.14A	X						
Bioretention	BMP T5.14B, BMP T7.30	X	X	X	X			X
Perforated Stub-out Connection	BMP T5.10C	X						
Permeable Pavement	BMP T5.15	X	X	X[b]	X[b]			X
Preserving Native Vegetation	BMP T5.40		X					X
Tree Retention and Planting	BMP T5.16		X					X
Vegetated Roofs	BMP T5.17		X					X
Reverse slope sidewalks	BMP T5.18		X					X
Minimal Excavation Foundation	BMP T5.19		X					X
Rainwater Harvesting	BMP T5.16		X					X
Infiltration Basin	BMP T7.10		X	X[c]	X[c]			X
Infiltration Trenches	BMP T7.20		X	X[c]	X[c]			X
Drywells			X					X
Sand Filters								
Basic Sand Filter Basin	BMP T8.10			X	X[d]		X[e]	
Large Sand Filter Basin	BMP T8.11			X	X		X	
Sand Filter Vault	BMP T8.20			X	X[d]		X[e]	

BMP	DOE Manual Reference	MR #5 - On-site Stormwater Management		MR #6 – Runoff Treatment				MR #7 – Flow Control
		List	LID Performance Standard	Basic	Enhanced	Oil Control	Phosphorus	
Linear Sand Filter	BMP T8.30			X	X[d]	X[f]	X[e]	
Wet Vault	BMPT10.20			X	X[d]	X[f]	X[e]	
Oil/Water Separators	BMP T11.10, BMP T11.11					X		
Combined Detention and Wet Pool Facilities								
Combined detention and wet pond	BMP T10.40		X	X	X[d]		X[e]	X
Combined detention and wet vault	BMP T10.40		X	X	X[d]		X[e]	X
Combined detention and stormwater	BMP T10.40		X	X	X[d]		X[e]	X

Notes:

a. Meets basic runoff treatment requirements when additional requirements for Basic Filter Strip (BMP T9.40, Volume V of the DOE Manual, Chapter 9) are met.

b. Underlying soil shall meet the treatment soil requirements outlines in Volume III of the DOE Manual, Section 3.3.7 or a water quality treatment course shall be provided (see the LID Technical Guidance Manual).

c. Soil suitability criteria for treatment and applicable drawdown requirements (Volume III of the DOE Manual, Section 3.3.7) also apply.

d. Can be used to meet enhanced runoff treatment requirement as part of a two-facility treatment train; Volume V of the DOE Manual, Section 3.4.

e. Can be used to meet phosphorus runoff treatment requirement as part of a two-facility treatment train; refer to Volume V of the DOE Manual, Section 3.3.

f. Can be used to meet oil control requirement as part of a two-facility treatment train, if used downstream of a filter strip, upstream of an infiltration system, or upstream of a wet pond or a biofilter (Volume V of the DOE Manual, Chapter 9). If used to meet basic, enhanced, or phosphorus treatment requirements, the same facility cannot be used to meet oil control requirements unless provisions are made for additional maintenance.

Table 5.5 – BMP Applicability for MR #6 – Runoff Treatment Only

BMP	DOE Manual Reference	MR #6 – Runoff Treatment			
		Basic	Enhanced	Oil Control	Phosphorus
CAVFS	BMP T7.40	X	X		
Sand Filters					
Basic Sand Filter	BMP T8.10	X	X[a]		X[b]
Large Sand Filter	BMP T8.11	X	X		X
Sand Filter Vault	BMP T8.20	X	X[a]		X[b]
Linear Sand Filter	BMP T8.30	X	X[a]	X[c]	X[b]
Media Filter Drain	BMP T8.40	X	X		
Basic Filter Strip	BMP T9.40	X	X[a]		
Wet Ponds					
Basic Wet Pond	BMP T10.10	X	X[a]		X[b]
Large Wet Pond [d]	BMP T10.10	X	X		X
Wet Vault	BMP T10.20	X	X[a]	X[c]	X[b]
Stormwater Treatment Wetlands	BMP T10.30	X	X		X[b]
Oil/water separators				X	

Notes:

a. Can be used to meet enhanced runoff treatment requirement as part of a two-facility treatment train; Volume V of the DOE Manual, Section 3.4.

b. Can be used to meet phosphorus runoff treatment requirement as part of a two-facility treatment train; refer to Volume V of the DOE Manual, Section 3.3.

c. Can be used to meet oil control requirement as part of a two-facility treatment train, if used downstream of a filter strip, upstream of an infiltration system, or upstream of a wet pond or a biofilter (Volume V of the DOE Manual, Chapter 9). If used to meet basic, enhanced, or phosphorus treatment requirements, the same facility cannot be used to meet oil control requirements unless provisions are made for additional maintenance.

d. A large wet pond requires a wet pool volume at least 1.5 times greater than for a basic wet pond.

Table 5.6 – BMP Applicability for MR #7 – Flow Control Only

BMP	MR #7 – Flow Control
Detention Ponds	X
Detention Pipe	X
Detention Vaults	X

D5-04 BMP DESIGN

This section presents BMP design information for approved BMPs for meeting MR #5 – On-site Stormwater Management, MR #6 – Runoff Treatment, and MR #7 – Flow Control. On-site Stormwater Management and Flow Control BMPs may also be used to help satisfy MR #8 – Wetlands Protection, where applicable (Chapter D1).

Pre-settling shall be evaluated for most BMPs to protect BMPs from excessive siltation and debris. Pre-treatment is required for some Water Quality Treatment BMPs, when specified in the DOE Manual. Beyond the requirements in the DOE Manual, pre-settling and pre-treatment shall be considered wherever a Basic Treatment BMP or the receiving water may be adversely affected by non-targeted pollutants (e.g., oil), or may be overwhelmed by a heavy load of targeted pollutants (e.g., suspended solids).

The below BMP design standards in this section reference specific chapters or sections of these other standards and guidance documents, where applicable:

- LID Technical Guidance Manual for details on On-site Stormwater Management, Flow Control, and Water Quality Treatment BMP design.
- The DOE Manual, including but not limited to the following key chapters:
  - Volume III, Chapter 3 for details on Flow Control BMP design
  - Volume V, Chapter 5 for details on Water Quality Treatment BMP design.
- The remainder of these Standards, including but not limited to the following key chapters and appendices:
  - Chapter D1 for site planning and analysis requirements, which shall be completed prior to BMP design.
  - Chapter D2 for design document and plan submittal requirements.
  - Chapter D3 for hydrologic analysis requirements to support design.
  - Chapter D4 for conveyance system design requirements, including design of bypass systems for off-line BMPs.
  - Appendix D8 for City of Bellevue's standard BMP detail drawings.
  - Appendix D9 for LID BMP infeasibility criteria.
  - Appendix D10 for infiltration feasibility and design standards and requirements.

D5-04.1 Setback and Clearance Requirements

Standard horizontal and vertical clearances from other utilities apply to stormwater management facilities, including conveyance, on-site stormwater management, flow control, and runoff treatment BMPs. The following horizontal and vertical clearances shall be provided:

A. Horizontal:

- Cable TV 5 feet
- Gas 5 feet
- Power 5 feet

- Sewer 5 feet
- Telephone, Fiber Optics 5 feet
- Water 5 feet

B. Vertical:

- Cable TV 1 foot
- Gas 1 foot
- Power 1 foot
- Sewer 1 foot
- Telephone, Fiber Optics 1 foot
- Water 1 foot

Setbacks may be modified if the Developer adequately demonstrates that the potential for flooding or erosion impacts are minimal, if approved by the City of Bellevue Utilities Reviewer. Refer to Sections D4-05.3, D5-03.1, D5-03.2, and to Table 5.7 for additional setback requirements.

Table 5.7 Setback Requirements for Stormwater Management Facilities

Storm Drainage Feature	Setback Requirement
Flow Control, Treatment and On-site Stormwater Management BMPs, including Infiltration Systems (unlined): • Wet Ponds • Detention Ponds • Bioretention (rain garden, bioretention swale, bioretention cell) • Roof Downspout Infiltration (infiltration trench or drywell) • Infiltration Pond • Biofiltration, Filter, or Other treatment system	• Measure setback elevations and distances from edge of bottom area of facility. • From any structure or building (from finish grade as measured from side of building): • With basement or crawl space: 10 feet • Foundation slab on grade: 5 feet • Uphill from building and ≥ 5,000 square feet of contributing impervious area: 100 feet • Uphill from building and < 5,000 square feet of impervious contributing area: 20 feet • Septic drainfield (King County Public Health compliance required): 30 feet if downhill, 100 feet if uphill • Drinking water well or spring: 100 feet (King County Public Health compliance also required) • Steep Slope, Landslide Hazard Area, or other Critical Area: per Land Use Code • Top of any slope ≥ 15%: 50 feet (may be revised with evaluation by geotechnical engineer or qualified geologist and approval) or in accordance with applicable Critical Areas Ordinance requirements, whichever is greater • Property line: 10 feet (may be reduced for right-of-way with City approval or with agreement from adjacent owner) • Within the right-of-way where dense underground infrastructure exists, only accept runoff from sidewalk areas • Contaminated soil or groundwater: For projects where runoff from 5,000 square feet or more of impervious surface area will be infiltrated on the site, infiltration within 500 feet up-gradient or 100 feet down-gradient of a contaminated site or landfill (active or closed) requires analysis and approval by a licensed hydrogeologist.

Storm Drainage Feature	Setback Requirement
Rain Recycling • Rain Barrel • Cistern	If facility meets definition of "Structure" in LUC 20.50.046, apply setbacks per LUC 20.20.010. Generally, a cistern would be considered a structure, a rain barrel would not.
Detention Ponds	• Outside the 1:1 plane from the pond bottom to the finished grade at an adjacent building • Outside the 1: 1 plane from the bottom edge of the pipe or structure to the property line at finished grade when an easement is not provided on the adjacent property • Top of a cut embankment and the toe of a fill embankment to property lines: ≤ 5 feet
Detention Vault or Tank Wet Vault or Tank	• Do not locate underneath any structure (e.g., buildings, sheds, decks, carports, retaining walls, etc.) • Finished grade at an adjacent structure foundation to the bottom edge of the vault or the bottom of the excavation at the outside diameter for tanks: outside the 1:1 plane • Property line to the bottom edge of the vault or the bottom of the excavation at the outside diameter for tanks: outside the 1:1 plane when an easement is not provided on the adjacent property

Infiltration has the potential to mobilize contaminants present in soil and groundwater. Therefore, the infiltration setbacks from contaminated areas (Section D5-03.2) shall be used in siting in siting infiltration facilities.

Contaminated sites are regulated by the U.S. Environmental Protection Agency (EPA) and the Washington State Department of Ecology (Ecology). EPA regulates contaminated sites under its Superfund and Resource Conservation and Recovery Act (RCRA) programs. The Superfund program regulates uncontrolled or abandoned hazardous waste sites where contaminants have been released onto the ground, or into streams, rivers, lakes, and other water bodies as a result of historical practices. RCRA regulates the disposal of solid and hazardous waste at active and future facilities to protect human health and the environment by ensuring that wastes are managed in an environmentally sound manner. EPA maintains a mapping tool that plots the locations of Superfund and RCRA-regulated sites: http://iaspub.epa.gov/apex/cimc/f?p=255:63:0::::. To obtain information about whether specific sites have groundwater contamination problems, go to the websites for the individual programs:

A. EPA Superfund Program site list: http://www.epa.gov/superfund/sites/index.htm

B. EPA RCRA Program site list: http://www.epa.gov/epawaste/hazard/correctiveaction/facility/index.htm.

Ecology manages contaminated sites (e.g., sediment, industrial sites, hazardous waste sites, and leaking underground storage tanks) under its Toxics Cleanup Program. Facility site locations can be found at Ecology's website: http://www.ecy.wa.gov/fs/. To obtain information about whether specific sites have groundwater contamination problems, go to the toxics Cleanup Program website: http://www.ecy.wa.gov/cleanup.html.

D5-04.2 Easement Requirements

Refer to D4-04 for stormwater BMP easement requirements.

D5-04.3 On-Site Stormwater Management BMPs

On-site stormwater management is required when a project triggers MR #5, per Chapter D1. Use the criteria set forth in BCC 24.06.65 and design guidelines in Chapter 3 of Volume III and Chapter 5 of Volume V of the DOE Manual and the LID Technical Guidance Manual, as modified herein, to plan, design and construct stormwater flow control systems.

D5-04.4 Flow Control BMPs

D5-04.4.1 General

Flow control is required when a project triggers MR #7, per Chapter D1. Use the criteria set forth in BCC 24.06.65 and design guidelines Volume III, Section 3.2 of the DOE Manual as modified herein to plan, design and construct stormwater flow control systems.

The requirement for flow control is met for sites that implement full infiltration or full dispersion per Section D5-03. Unless the site was determined to be infeasible for On-site Stormwater Management BMPs, flow control requirements may be fully or partially offset by implementing on-site stormwater management, where site conditions allow.

Flow control systems shall be designed to maximize reliability, minimize maintenance needs, and maximize the distance between the inlet and outlet in order to improve runoff quality, and minimize hazards to persons or property (both on-site and off-site), nuisance problems and risk of failure.

In areas of high groundwater, the groundwater collection system flows shall bypass the detention system.

Flow control facilities that serve multiple sites or phases of development are subject to all of the engineering and design requirements contained in the Storm and Surface Water Utility Code and these Standards. Conceptual site plans for all sites to be served by the proposed stormwater facilities shall be submitted to the City for review. Construction of the facilities shall occur in conjunction with the first project or phase to be served by the flow control facilities.

The 100-year water surface elevation shall be at least 1 foot below the lowest habitable finished floor elevation in the area that is tributary to the stormwater detention facility.

The 100-year water surface shall not surcharge roof, footing and yard drains, or underdrains.

Street and parking overlays are considered to be routine maintenance and are not considered to be redevelopment per BCC 24.06.065 (F).

Flow control facilities for the right-of-way shall be owned and operated by the City and shall be separate from private on-site systems. In a plat where the stormwater facilities will be owned and operated by the City, runoff from the right-of-way and private properties in the plat may be combined and controlled in a single facility. Private detention systems may accommodate public drainage (e.g., from a public right-of-way) if a hold harmless agreement is completed by the developer and recorded against the property, and the proposal meets all the other design requirements of the Utility.

D5-04.4.2 Design Flow Rates

A. General

Refer to Chapter D3 for standards and allowable hydrology methods for calculating design flow rates.

Upstream off-site stormwater runoff shall bypass the proposed Flow Control BMPs unless the existing peak runoff rate from the upstream off-site area for the 100-year peak flow rate is less than 50% of the allowable release rate for the 100-year peak flow rate of the proposed project.

If the stormwater runoff is above the 50% limit and bypassing detention is not practical, the detention facility shall be sized for the entire flow that is directed to it.

If the upstream off-site property is developed later, the owner of that property is responsible to modify the facility and/or control structure to ensure that flow control requirements are maintained.

B. Sites with Existing Stormwater Detention Systems

When flow control is required on a site with an existing flow control system, the Developer may choose one of the following options:

1. Retain the existing system, modify the control structure and provide infiltration capacity where feasible. Add storage volume where infiltration is infeasible, as needed to meet the current codes for flow control; or
2. Replace the existing flow control with a system designed to meet the current codes for flow control.

When choosing among the options, the Developer shall demonstrate that the combined discharge will meet the performance of the previous standards for the non-project area and the flow control requirements of the current standards for the project area. This requires a flow duration curve (based on continuous modeling) to be developed at a point immediately downstream from the project that includes the predicted outflow from the existing pond under current conditions, and the historic (forested) runoff from the project site. This combined duration curve would be used to design the new or modified flow control facilities and demonstrate compliance for the performance of the existing pond and the new pond (designed to current standards). Refer to Chapter D3 for details on hydrologic modeling to support design.

D5-04.4.3 Multi-Purpose Use

Detention facilities designed for multiple use (sport courts, neighborhood parks, play areas, picnic areas, etc.) are allowed.

Storage for runoff from more frequent storms shall be stored separately from the multiple use areas. At a minimum, the detained volume for the 2-year design storm shall be used to size the separate facilities.

Multi-use amenities shall be anchored to prevent floatation. Maintenance of multi-use amenities will be by others and Developer shall make arrangement for such maintenance.

D5-04.4.4 Control Structures

A. General

Use the criteria and methods set forth in Volume III, Section 3.2.4 of the DOE Manual except as modified herein.

Allowable release rates shall be achieved using a tee type flow restrictor to meter flows.

All restrictor devices to be maintained by the City shall be equipped with a shear gate.

B. Clearances

The minimum clearance between the rim of the overflow standpipe and the bottom side of the structure's top slab shall be no less than one-half (0.5) foot.

The minimum clearance between the flow restrictor (standpipe, orifices, shear gate, etc.) and the steps/ladder rungs shall be two (2) feet.

C. Orifices

Minimum orifice is one (1) inch in diameter without screening.

When screening is provided in an accessible location for inspection and maintenance to prevent blockage, the orifice size may be reduced to a minimum of 0.5-inch.

A notch weir may be incorporated into the tee-type flow restrictor when a floatables baffle is provided. See Figures 3.2.11, 3.2.14 and 3.2.15 in Volume III of the DOE Manual.

D. Maintenance Access

Covers, grates, and hatches shall be bolt locked.

All stormwater detention system control structures shall be accessible for maintenance and operation.

In single family residential subdivisions, control structures which are not abutting a roadway shall be provided with dedicated tracts at least 15-feet-wide to accommodate maintenance vehicles. The minimum clear driving width shall be 12 feet.

In multi-family and commercial developments, control structures which are not abutting a roadway shall be provided with access to accommodate maintenance vehicles. The minimum clear driving width shall be 12 feet.

Maximum access road grades:	15% (paved)
	10% (gravel)
Minimum turn-around radius:	25 feet or hammerhead.

Gates and/or removable bollards are required to restrict access, as necessary, to drainage facilities. Such measures shall comply with the Land Use Code and these engineering standards. Cables and chains stretched across access roads are not acceptable.

D5-04.4.5 Ponds

A. General

Use the criteria and methods set forth in Volume III, Section 3.2.1 of the DOE Manual as modified herein.

Stormwater detention ponds may be used as interim sedimentation facilities if cleaned and restored to approved plan conditions following completion of all on-site construction.

Stormwater shall be routed through a catch basin with spill control prior to discharging to the pond in order to facilitate the easy removal of transported sediments and debris.

B. Design Criteria

Provide debris barriers or trash racks on the detention pond outlet to protect the outlet from blockage or plugging.

C. Embankments

All embankments for detention and treatment facilities shall comply with Dam Safety Guidelines as published by the Dam Safety Division of the Department of Ecology, current edition. The maximum embankment height is measured from the downslope toe to the crest of the embankment.

All embankments for detention facilities six (6) feet and higher shall be designed, inspected and certified by a civil/geotechnical engineer. The civil/geotechnical engineer shall submit a letter certifying that all embankment design requirements have been met during embankment construction.

The maximum height of rockeries subject to inundation due to fluctuating pond levels is four (4) feet. The exposed face of the rockery shall be above the permanent pool elevation. Rockery drains shall drain through the detention system.

Ponds may be designed with retaining walls only as approved by the City on a case-by-case basis and provided that the design conforms to DOE Manual Volume III, Section 3.2.1. Public safety shall be a primary design consideration.

D. Dimensions

For ponds where the maximum design water depth is less than three- (3) feet-deep, the minimum bottom width is six (6) feet.

For ponds where the maximum design water depth is three- (3) feet-deep and greater, the minimum bottom width shall be three (3) times the maximum design water depth.

The pond bottom shall be sloped at 0.5% towards the outlet for drainage to help facilitate maintenance.

Refer to Section D5-04.1 for detention pond setback requirements.

E. Maintenance Access

Use the criteria set forth in Volume III, Section 3.2.1 of the DOE Manual as modified herein.

A vehicle access ramp shall be provided to the bottom of the detention pond when the bottom width is 15 feet or greater and/or when the height of the interior pond embankment and/or wall is greater than four (4) feet. The grade of the access ramp shall be no steeper than 20%.

Gates and/or removable bollards may be required to restrict access to drainage facilities. Such measures shall comply with the Land Use Code and these engineering standards. Cables and chains stretched across access roads are not acceptable.

F. Safety

Use the criteria set forth in Volume III, Section 3.2.1 of the DOE Manual. Fencing shall be required when vertical walls are used, when more than 25% of the perimeter side slopes are

steeper than 3 Horizontal : 1 Vertical (3H:1V), and when the permanent ("dead") pool depth exceeds three (3) feet.

For publicly owned and maintained ponds, fencing shall be cyclone fencing with black vinyl coating at minimum 6 feet tall. Fencing shall conform to the Standard Plans for Chain Link Fence Type 3.

For privately owned and maintained ponds, fencing shall be minimum 42-inches tall with no spaces between boards greater than 4-inch clear space.

G. Overflow & Spillways

Use the criteria set forth in Volume III, Section 3.2.1 of the DOE Manual as modified herein.

All detention storage facilities shall include a provision for non-erosive control of overflows. Overflows shall be directed to a safe discharge path to protect adjacent and downstream properties from damage. Provide calculations and data to support the design.

Surface detention ponds shall be provided with a minimum of two controlled emergency overflows - the primary overflow in the control structure and the secondary overflow in the engineered embankment.

The crest of the secondary overflow shall be at least 0.5 feet above the crest of the primary overflow.

H. Vegetation & Landscaping

Detention pond landscaping shall comply with the requirements of Type III landscaping set forth in Section 20.20.520 of the Land Use Code and as specified herein. Ponds with walls higher than six (6) feet shall be landscaped to Type II requirements set forth in Land Use Code Section 20.20.520 and as specified herein. Deciduous trees shall not be utilized in and around detention ponds. However, deciduous shrubs and shrub/trees (e.g. Vine Maple) may be used in the understory to provide needed diversity for a pleasing appearance.

All ponds shall be landscaped to provide for slope stability, erosion control, and low maintenance. Landscape materials shall be fully compatible with use as a stormwater detention facility including runoff treatment.

Floatable or erodible material (i.e. wood chips, beauty bark, straw mulch, etc.) shall not be allowed in the pond interiors.

Vegetation on pond embankments shall be limited to shallow rooted varieties.

Vegetation shall be placed into topsoil above or adjacent to the engineered embankment.

Where detention pond landscaping shall be maintained by the Utilities Department, landscaping shall be non-irrigated, low maintenance, and drought tolerant and shall consist of native plant species. Lawn or turf grass is not allowed.

Use the criteria set forth in Volume III, Section 3.2.1 of the DOE Manual to assist in appropriate vegetation selection.

D5-04.4.6 Underground Detention Systems

A. General

Use the criteria and methods set forth in Volume III, Section 3.2.2 - Detention Tanks and 3.2.3 - Detention Vaults of the DOE Manual as modified herein.

All stormwater shall be routed through a catch basin with spill control prior to discharging to detention vaults or pipes to facilitate the easy removal of transported sediments and debris.

B. Design Criteria

- For Detention Vault/Tank setbacks, refer to Section D5-04.1.
- Detention vaults/tanks shall not be located underneath any structure (e.g. buildings, sheds, decks, carports, retaining walls, etc.); except that under building detention is allowed in the Central Business District, in areas of zero lot line, or upon approval by the City.
- Detention vaults/tanks shall not be located where such facilities interfere with other underground utilities.
- If vaults are constructed above ground, they shall be provided with visual screening and landscaping.
- When the design of vaults does not take into account buoyancy or hydrostatic pressure, footing drains shall be provided. Footing drains shall be backfilled to within two (2) feet of the top of the vault with Gravel Backfill for Drains conforming to Section 9-03.12(4) of the Standard Specifications. The gravel backfill shall be protected from contamination by soil fines.
- When the design of tanks or pipes does not take into account buoyancy, underdrains shall be provided. Underdrains within the pipe trench shall be backfilled from the bottom of the pipe to the crown with washed rock. The washed rock shall be protected from contamination by soil fines.
- Clean-outs on footing drains and underdrains shall be provided every 100 feet and at bends or drain pipe junctions. Connection to the stormwater conveyance system shall be at a point where the hydraulic grade line in the conveyance pipe does not affect the free draining ability of the footing drains or underdrains.

C. Minimum Size

- The minimum diameter of a detention pipe shall be 36 inches.
- The minimum height of any detention vault shall be 84 inches.

D. Structural Design

Use the criteria set forth in Volume III, Section 3.2.2 and 3.2.3 of the DOE Manual and by the City Building Code. Note that where the top of a vault is in a traveled way, additional loading requirements to accommodate fire trucks will apply. Refer to the Building Division of the Development Services Department for available information on *Structural Slab Design Loadings.*

E. Hydrostatic Pressure & Buoyancy

Use the criteria set forth in Volume III, Section 3.2.2 and 3.2.3 of the DOE Manual as modified herein. If permanently lowering the groundwater in the vicinity is not feasible, pipes and vaults shall be designed to accommodate hydrostatic loading and buoyancy effects.

F. Maintenance Access

Use the criteria set forth in Volume III, Section 3.2.2 and 3.2.3 of the DOE Manual as modified herein. Since underground detention facilities are subject to confined space entry regulations, such facilities shall be designed to facilitate safe inspection and maintenance.

Access structures at each end of the facility shall be required. Spacing between access openings shall not exceed 50 feet. Covers, grates, and hatches shall be bolt locking. If the vault or pipe contains cells, one access minimum per cell is required.

Access openings shall be 24 inches in diameter per Standard Detail D-22 and centered over a ladder and/or steps. For control structures, accesses shall be located so that an 8-inch-diameter rigid vactor tube can reach the sump directly from the top, and so that a person entering the structure can step off the ladder or steps onto the floor.

The opening shall allow visual inspection of the restrictor pipe, while maintaining vertical vactor access to the sump area.

In order to achieve both requirements, it may be necessary to increase the control structure size, provide two 24-inch access openings or a hatched cover that conforms to the loading requirements given the proposed location.

Orifice elbows shall be located on the side of the stand pipe nearest the ladder for clear visual inspection from above.

Gates and/or removable bollards may be required to restrict access to drainage facilities. Such measures shall comply with the Land Use Code and these engineering standards. Cables and/or chains stretched across access roads are not acceptable.

D5-04.4.7 Infiltration Systems

A. General

Infiltration systems for projects triggering MR #6 and/or #7 shall be designed in accordance with criteria set forth in Volume III, Chapter 3.3 of the DOE Manual as modified herein.

Roof downspout infiltration systems shall be designed according to criteria set forth in Volume III, Chapter 3.1.1 of the DOE Manual with exception and additions noted in this chapter of these Standards, Chapter 5 – BMP Design. For roof downspout infiltration systems on single family residential development, infiltration trenches may be located under new pavement if a small yard drain or catch basin with grate cover is placed at the end of the trench pipe such that overflow would occur out of the catch basin at an elevation at least one foot below that of the pavement, and in a location which can accommodate the overflow without creating a significant adverse impact to downhill properties or drainage systems.

A detention system may be required in conjunction with the infiltration system to meter flows at an infiltratable rate.

Areas proposed for infiltration shall be secured with temporary fencing prior to clearing the site. Existing, developed lots shall, where feasible, locate downspout infiltration systems in areas which have not previously: 1) driven on or across by vehicles or equipment, 2) used for material storage or stockpiles, or 3) used for vehicle or equipment parking.

Approval of an infiltration system shall obligate the owner to repair, replace, or reconstruct the infiltration system if it fails to operate as designed. The maintenance and operation schedule for an infiltration system shall include such a provision.

B. Design Criteria

Infiltration Systems for Flow Control

Infiltration systems for projects triggering MR #6 and/or MR #7 shall be designed in accordance with criteria set forth in Volume III, Chapter 3.3 of the DOE Manual as modified herein.

The Developer shall evaluate and demonstrate the feasibility of infiltration on-site in accordance with Section D5-03.2.

Infiltration facilities shall not be located within required setback distances specified in Section D5-03.2.

Infiltration systems for flow control shall be designed to infiltrate such that any overflow/bypass meets the flow duration standard.

Roof Downspout Infiltration Systems

Design criteria for Roof Downspout Infiltration Systems are contained in Volume III, Chapter 3.1.1 of the DOE Manual. Use of these design criteria is limited in Bellevue to sites with predominantly outwash type soils that are medium-grained sand or coarser. Setbacks for Roof Downspout Infiltration Systems are listed in Section D5-03.2.

A. Overflows

Each flow control infiltration facility shall provide emergency surface storage at least 10% of the 100-year, 24-hour design storm volume, with a minimum depth of 0.5 feet, on the site prior to discharging runoff to a safe overflow route. The overflow route shall have the capacity for the 100-year, 24-hour flow in the event of system failure. The surface storage is intended to make the owner aware of a problem with the infiltration system. Overflows shall be routed to the municipal storm drainage system if surface dispersion cannot be provided, or in accordance with Section D4-02 if routing to the municipal storm drainage system is not feasible. The overflow route shall be contained on the owner's property, and shall be shown on the plan.

B. Runoff Treatment

Inflow to flow control and runoff treatment infiltration facilities shall be pre-treated for debris and sediment removal. Where runoff is anticipated to also contain contaminants and pollutants, it shall be treated using the appropriate BMPs set forth in the Chapter 5 of Volume V of the DOE Manual, prior to being infiltrated.

C. Maintenance Access

Infiltration system components shall be accessible for periodic inspection and routine maintenance.

Infiltration systems, with pre-treatment facilities, which are not abutting a roadway shall be provided with access to accommodate maintenance vehicles and construction equipment. The minimum clear driving width shall be 12 feet.

For roof downspout infiltration systems, access allowances for maintenance and construction equipment shall be made to facilitate routine maintenance activities and reconstruction (if necessary in the future).

D. Determining subgrade infiltration rates

Refer to Section D5-03.2 for infiltration testing, data analysis, and reporting requirements.

D5-04.4.8 Dispersion Systems

Refer to Chapter 5 of Volume V and Chapter 3 of Volume III of the DOE Manual for details on design of BMPs for dispersion systems that provide flow control, including Roof Downspout, Dispersion and Full Dispersion.

D5-04.5 Water Quality Treatment BMPs

D5-04.5.1 General

Water quality treatment facilities, including those that serve multiple sites, are subject to all of the engineering and design requirements contained in the Storm and Surface Water Utility Code and these Standards. Conceptual site plans for all sites to be served by the proposed stormwater facilities shall be submitted to the City for review. Construction of facilities that serve multiple sites or a phased development shall occur in conjunction with the first project or phase to be served by the runoff treatment facilities.

Pavement overlay or replacement shall comply with Redevelopment thresholds contained in BCC 24.06.065. Street and parking overlays are considered to be routine maintenance and are not considered to be redevelopment per Section 24.06.065(B) and (F) of the Storm and Surface Water Utility Code. Removal of pavement to subgrade and subsequent replacement (not including spot base repairs) is considered to be redevelopment and disturbance per Section 24.06.065(F) of the Storm and Surface Water Utility Code. Such reconstruction is not considered to be routine maintenance.

For design of infiltration-based water quality treatment facilities, refer to the DOE Manual, Volume III, Section 3.3.7 - Site Suitability Criteria, *SSC-6 Soil Physical and Chemical Suitability for Treatment* and Appendix D10 for additional testing and design requirements.

D5-04.5.2 Source Control BMPs

Source Control BMPs are preventive BMPs and include site design, use of alternative products, operation and maintenance procedures (good housekeeping), etc. The goal of source control BMPs is to keep contaminants associated with a development's activities from entering the storm and surface water system rather than having to remove contaminants later.

When required by Section 24.06.065 of the Storm and Surface Water Utility Code, source control BMPs shall be implemented. Source Control BMPs shall be designed and implemented in accordance with Volume IV of the DOE Manual as modified herein.

Garbage dumpsters shall be designed not to leak. Surface water from uncovered garbage dumpster areas shall discharge to the sanitary sewer if meeting the requirements of S3-01.4 (B) of these Standards. Any such dumpster area shall be bermed, and drainage shall be routed through an oil/water separator connected to the sanitary sewer.

D5-04.5.3 Water Quality Treatment BMPs

A. General

All water quality treatment facilities shall be designed in accordance with criteria set forth in Volume V of the DOE Manual as modified herein.

In a residential subdivision where the stormwater facilities will be owned and operated by the City, runoff from the right-of-way and private properties in the subdivision may be combined and treated in a single facility.

If "clean" runoff is routed to the water quality facility, those flows shall be included in the sizing calculations for the facility. Drainage from most landscaped areas is required to be treated. Areas in native vegetation should not be mixed with untreated runoff from the development, if feasible. Once runoff from non-pollutant generating areas is combined with runoff from contaminant-generating areas, it cannot be discharged without treatment.

Proprietary BMPs shall be accepted only if they are approved by Ecology, as follows:

- General Use Level Designation (GULD) under Ecology's emerging technologies program, per Chapter 12, Volume V of DOE Manual, and provided they meet required treatment level.
- Certified Technology Assessment Protocol – Ecology (TAPE) under Ecology's TAPE program.

Runoff treatment BMPs are categorized by the type of contaminants most effectively removed. These categories are:

- Oil/Water Separation - Designed to remove and contain oil.
- Phosphorus Treatment - Designed to remove suspended and dissolved nutrients.
- Enhanced Treatment - Designed to remove more heavy metals than Basic Treatment. Application is targeted to areas that discharge to fish-bearing water bodies.
- Basic Treatment - Designed to remove particulates and contaminants typically associated with particulates, such as heavy metals.

B. Water Quality Treatment BMP Sizing

Refer to Section D1-07 for design flow rates to be used in sizing Water Quality Treatment BMPs.

C. Water Quality Design Flow Rate

Refer to Chapter D3 for standards and allowable hydrology methods for calculating design flow rates.

D. Treatment Facility Maintenance

Stormwater treatment facilities shall be maintained in accordance with the current and any future editions of the City of Bellevue Maintenance Standards, and with the maintenance schedule in Volume V of the DOE Manual. Maintenance requirements shall be included in the O&M Manual described in Section D2-08.

E. Oil Control

All Oil Control facilities shall be designed in accordance with criteria set forth in Volume V of the DOE Manual as modified herein.

Locate a spill control separator upstream from the detention system, or immediately before leaving the site if there is no detention system per section D5-04.5.

Design Requirements for API and CP Separators

High-Flow Bypass: A high flow bypass is required if the separator is not capable of treating the 100-year storm peak runoff rate. Bypassing storm flows greater than the treatment capacity of the separator prevents "flushing" during peak events, substantially increases the effectiveness of the oil/water separator, and reduces size requirements.

Drainage Area: Uncontaminated water (roof runoff, pervious area runoff, etc.) should not drain to the oil/water separator.

F. Phosphorus Treatment

All Phosphorus Treatment facilities shall be designed in accordance with criteria set forth in the DOE Manual, Volume V, Section 3.3 as modified herein.

The approved options for providing Phosphorus Treatment are listed in Figure 5.2 and presented in more detail in Volume V of the DOE Manual. Additional means of meeting the phosphorus treatment requirement may be approved by the City if the proposal fulfills the design criteria in the Department of Ecology's (Ecology's) General Use Level Designation (GULD) approval or the Technology Assessment Protocol – Ecology program (http://www.ecy.wa.gov/PROgrams/wq/stormwater/newtech/index.html).

G. Enhanced Treatment

All Enhanced Treatment facilities shall be designed in accordance with criteria set forth in Volume V of the DOE Manual as modified herein.

H. Basic Treatment

All Basic Treatment facilities shall be designed in accordance with criteria set forth in Volume V of the DOE Manual.

Basic Treatment generally applies to:

- Project sites that discharge to the ground, UNLESS:
  - The soil suitability criteria for infiltration treatment are met; (see Chapter 3 of Volume III of the DOE Manual for soil suitability criteria) or
  - The project uses infiltration strictly for flow control – not treatment - and the discharge is within ¼-mile of a phosphorus sensitive lake (use a Phosphorus Treatment facility), or within ¼ mile of a fish-bearing stream or lake (use an Enhanced Treatment facility).

Phosphorous sensitive lakes include Larsen Lake, Phantom Lake, and Lake Sammamish.

- Residential projects not otherwise needing phosphorus control as designated by Section D5-04.5.3(F), the US EPA, or the Department of Ecology; and
- Project sites discharging directly to Lake Washington (lakes listed in Appendix I-C of the DOE Manual except Lake Sammamish, which requires Phosphorus Treatment); and
- Landscaped areas of industrial, commercial, and multi-family project sites, and parking lots of industrial and commercial project sites that do not involve pollution-generating sources (e.g., industrial activities, customer parking, storage of erodible or leachable material, wastes or chemicals) other than parking of employees' private vehicles.
    - For developments with a mix of land use types, the Basic Treatment requirement shall apply when the runoff from the areas subject to the Basic Treatment requirement comprises 50% or more of the total runoff within a threshold discharge area.

D5-05 BMP MAINTENANCE

Long-term maintenance is required for all runoff control and treatment facilities. See Section D2-08 for O&M Manual requirements. General maintenance shall be performed per DOE Manual Volume IV, Chapter 2, page 2-37, BMPs for Maintenance of Stormwater Drainage and Treatment Systems. In addition:

A. For On-site Stormwater Management BMP, refer to the *Western Washington LID O&M Manua*l (Ecology, 2013) for general maintenance guidelines.

B. All BMPs except splash blocks, sheet flow dispersion, and concentrated flow dispersion require a maintenance log be kept on-site per Section D2-08.

C. When appropriate, use the performance standards and inspection and maintenance schedules and techniques provided by the designer or manufacturer.

D. Comply with the maintenance guidelines in *Bellevue Maintenance Standards*, and copy applicable maintenance procedures into the O&M Manual for each facility.

END OF CHAPTER D5

CHAPTER D6 – MATERIALS

TABLE OF CONTENTS

Not included in draft document.

DRAFT

CHAPTER D6 – MATERIALS

D6-01 GENERAL

D6-01.1 Manufacturer's Certificates of Compliance

Contractor shall provide Manufacturer's Certificate of Compliance in accordance with Section 1-06.3 of the Standard Specifications when requested by the City for all pipe, fittings, precast concrete products, castings, and manufactured fill materials to be used in the project.

D6-02 CONVEYANCE SYSTEMS

D6-02.1 General

D6-02.2 Open Channels

Rock riprap for channel armoring shall conform to Section 9-13 of the Standard Specifications.

Seed mixes for open channels, including roadside ditches are as follows:

Mix# I - (Dry conditions)

30% Colonial Bentgrass

30% Kentucky Bluegrass

20% Tall Fescue

15% Perennial Rye grass

5% White or Red Clover

Application Rate = 120 lbs./acre

Mix #2 - (High groundwater conditions)

30% Creeping Red Fescue

30% Redtop Bentgrass

30% Meadow or Pacific Foxtail

5% Timothy

5% Birdsfoot Trefoil

Application Rate = 60 lbs./acre

Refer to the LID Technical Guidance Manual for Puget Sound (PSP and WSUPCE 2012) for soil, plant, mulch, and other materials to be used for bioretention and other open channel LID facilities.

D6-02.3 Storm Drain Pipe and Culvert Materials

Only the pipe materials listed are approved for use in storm drain systems and culverts. Materials shall meet the noted sections of the Standard Specifications and as modified herein:

DRAFT

Reinforced Concrete Pipe (RCP), Cl. 3 (min.)	9-05.7(2)
Solid Wall PVC Pipe, SDR 35 (min.)	9-05.12(1)
Profile Wall PVC Pipe	9-05.12(2)
Ductile Iron Pipe (DIP), Class 52	9-05.13
Corrugated Polyethylene Storm Sewer Pipe	9-05.20
High Density Polyethylene Pipe (HDPP)	D6-02.3(D)
Corrugated Polyethylene Tubing (single wall)	D6-02.3(E)
Corrugated Polypropylene Pipe (double and triple wall)	D6-02.3(F)

All joints shall be made with a bell/bell or bell and spigot coupling and shall conform to ASTM D3212, using elastomeric gaskets conforming to ASTM F477. All gaskets shall be factory installed on the pipe in accordance with the producer's recommendations.

A. Solid Wall Polyvinyl Chloride (PVC) Pipe

- PVC pipe must be at least SDR 35 and meet the requirements of ASTM D 3034 for diameters up to 15 inches and ASTM F 679, for sizes 18 to 27-inch diameter.

B. Profile Wall PVC Pipe

- Profile wall PVC pipe shall conform to AASHTO M 304. Joints shall be an integral-bell gasketed joint conforming to ASTM D 3212. Elastomeric gasket material shall conform to ASTM F 477.
- The minimum pipe diameter shall be 8 inches. The maximum pipe diameter shall be 15 inches or the diameter for which a supplier has a joint conforming to ASTM D 3212, whichever is less.
- Fittings for profile wall PVC pipe shall meet the requirements of AASHTO M 304 and shall be injection molded, factory welded, or factory solvent cemented.

C. Corrugated Polyethylene Storm Sewer Pipe (CPE)

- Corrugated polyethylene storm sewer pipe shall meet the requirements of AASHTO M-294, Type S.
- The minimum pipe diameter shall be 8 inches. The maximum pipe diameter shall be 36 inches or the diameter for which a supplier has a joint conforming to ASTM D 3212, whichever is less.
- Joints for corrugated polyethylene culvert pipe shall be classified as "watertight." Watertight joints shall be made with a sleeve or with a bell spigot and shall conform to ASTM D 3212 (10.8 psi) using elastomeric gaskets conforming to ASTM F 477. Gasketed joints shall be lubricated as recommended by the producer during installation.
- "Soiltight" joints shall not be permitted.
- Fittings for corrugated polyethylene storm sewer pipe shall be blow molded, rotational molded, or factory welded.

DRAFT

- Thermoplastic pipe fittings shall meet the requirements set forth in AASHTO M 294.
- Pipes must meet the air leakage test; refer to Section D7-09 herein for testing requirements.

D. High Density Polyethylene Pipe (HDPP)

- HDPP shall be used outside of the traveled roadway. Primary use of this material includes steep slope installations and overbank drains.
- HDPP shall be manufactured in accordance with ASTM F 714 or ASTM D 3035. Resin shall be Type III - C5P34 as set forth in ASTM D1248. The minimum Standard Dimension Ratio (SDR) is 32.5 with a design working pressure rating of at least 50 psi at 25 degrees C.
- HDPP and fittings shall be joined by the butt fusion process per ASTM D 2657 and the manufacturer's specific recommendations. Mechanical (bolted) flange connections may be used to facilitate pipeline installation.
- HDPP fittings shall be manufactured in accordance with ASTM D 2683 or ASTM D 3261.

E. Corrugated Polyethylene Tubing (CPT)

- Single wall corrugated polyethylene tubing (CPT) is approved for privately owned and maintained overbank drains only in accordance with Section D4-05.8(B) herein.
- CPT shall conform to ASTM F-405. Minimum CPT diameter is four (4) inches and maximum allowed diameter is six (6) inches.
- Fittings for CPT shall be blow molded, rotational molded, or factory welded. Thermoplastic pipe fittings shall meet the requirements set forth in AASHTO M 294.

F. Corrugated Polypropylene Pipe (Double and Triple Wall)

- Double wall corrugated polypropylene pipe is approved for use in culvert and storm drainage applications in 12 to 30-inch diameters.
- Polypropylene pipe shall meet ASTM F2736 requirements.

D6-02.4 Pipe Bedding

For Reinforced Concrete Pipe (RCP), Corrugated Metal Pipe (CMP - which includes steel and aluminum), and Ductile Iron Pipe (DIP), bedding material shall be in accordance with Section 9-03.12(3) - Gravel Backfill for Pipe Zone Bedding of the Standard Specifications.

For convenience, crushed rock bedding conforming to crushed surfacing top course material of Section 9-03.9(3) - Crushed Surfacing of the Standard Specifications may also be used as bedding material for pipe.

In unpaved areas, the Contractor may request to use excavated material used as pipe bedding where it has been determined by the Engineer as suitable meeting the requirements

DRAFT

of Section 9-03.12(3) - Gravel Backfill for Pipe Zone Bedding of the Standard Specifications, and proper compaction levels can be achieved.

For PolyVinyl Chloride (PVC) pipe, Corrugated PolyEthylene (CPE) pipe, and other thermoplastic pipe, bedding material shall be imported material conforming to crushed surfacing top course material of Section 9-03.9(3) - Crushed Surfacing of the Standard Specifications.

For ductile iron storm drain pipe, the Contractor may request to use excavated material as pipe bedding where it has been determined by the Engineer as suitable material meeting the requirements of Section 9-03.12(3) - Gravel Backfill for Pipe Zone Bedding of the Standard Specifications and proper compaction levels can be achieved.

D6-02.5 Trench Backfill

For transverse trenches (perpendicular to the roadway centerline) in paved areas, crushed rock backfill conforming to Section 9-03.9(3) - Crushed Surfacing of the Standard Specifications shall be used as trench backfill for pipe.

For longitudinal trenches (trenches parallel to the centerline of the roadway) in paved areas, backfill material (4 feet and deeper below finished grade) shall conform to Section 9-03.14(1) - Gravel Borrow of the Standard Specifications. The Contractor may request to use excavated material as trench backfill and must demonstrate to the Engineer that the suitable excavated material conforms to Section 9-03.14(1) - Gravel Borrow of the Standard Specifications and proper compaction levels can be achieved. Admixtures and/or additives may not be used to modify the moisture content in order to meet compaction specifications.

The top 4 feet of longitudinal trenches shall be backfilled with crushed rock conforming to Section 9-03.9(3) - Crushed Surfacing of the Standard Specifications.

In unpaved areas, trench backfill material shall conform to Section 9-03.14(1) - Gravel Borrow of the Standard Specifications. The Contractor may request to use excavated material as trench backfill when it has been determined by the Engineer to be suitable and conforms to Section 9-03.14(1) - Gravel Borrow of the Standard Specifications and proper compaction levels can be achieved.

In paved areas within the public right-of-way, backfilling storm drain trenches shall be as specified in Standard Detail D-25. Controlled Density Fill (CDF) may be used lieu of Crushed Surfacing - Top Course.

D6-02.6 Private Conveyance Systems

Private conveyance systems shall comply with all criteria and standards for drainage systems set forth herein unless specifically exempted.

D6-02.7 Outfalls

Rock riprap for scour protection and energy dissipation shall conform to Section 9-13 of the Standard Specifications.

Gabions for energy dissipators shall conform to Section 6-09.3(6) - Gabion Cribbing and Section 9-27.3 - Gabion Cribbing of the Standard Specifications.

DRAFT

Precast concrete products for energy dissipators shall comply with Section 7-05.2 of the Standard Specifications.

Acceptable pipe materials for all outfall sections of storm pipe shall include those listed in D6-02.3 of these Standards, except that PVC pipe is not permitted due to light sensitivity and degradation.

D6-02.8 Couplings

Approved couplings for use on storm drainage mains with differing materials or diameters or non-approved materials shall be ductile iron mechanical couplings (equal to ROMAC).

D6-02.9 Steel Casings

Steel casing shall be black steel pipe conforming to ASTM A-53. Before installation, coat casing exterior with shop-applied anticorrosive coating conforming to AWWA C210. Minimum coating thickness shall be 16 mils dry film thickness (DFT); however, thickness shall not exceed manufacturer's recommended thickness. Coating type shall be a polyamide epoxy-coal tar equal to Tnemec Hi-Build Tneme-Tar, Series 46H-413.

Casing wall thickness shall be 0.250 inch for casings 24 inches or less in diameter and 0.375 inch for casings over 24 inches in diameter. Carrier pipe for sewage shall be PVC (SDR 35).

D6-02.10 Casing Spacer

Casing spacers shall be installed in casings over 10 feet long. Where casing spacers are not used, the carrier pipe shall be more than 10 feet in length (no pipe joints inside casing). Casing spacer shell shall be manufactured in two pieces from heavy gauge T-304 stainless steel or 14 gauge hot rolled pickled steel joined with ribbed flanges. The shell shall be lined with a PVC liner 0.090 inch thick with 85-90 durometer. Carbon steel casing spacer shell and risers shall be coated with a heat fused PolyVinyl chloride coating, or hot-dip galvanized.

PolyVinyl Chloride Coating Specifications:

Durometer - Shore A2 (10 Sec.) (ASTM D-1706-61T)	-	80
Max. operating temperature (constant)	-	150°(65°C)
Electrical properties (ASTM D-149-61) (short time .010")	-	1380 V/Mil

Resistance:

Salt spray (ASTM B-117)	-	Excellent
Acids	-	Good
Alkalies	-	Good

All nuts and bolts shall be 18-8 stainless steel.

Runners shall be supported by risers made from heavy gauge T-304 stainless steel or 12 gauge hot rolled pickled steel.

Runners shall be ultra high molecular weight polymer with high resistance to abrasion and sliding wear.

TYPICAL DATA			
PROPERTY	**ASTM METHOD**	**UNITS**	**VALUE**
Specific Gravity	D-792	gm/cc	.934
Tensile Strength (Break)	D-638	PSI	3500
Elongation (Break)	D-638	%	380
Izod Impact	D-256	Ft.Lbs./in. of notch	No break
Hardness	D-2240	Shore D	67
Coefficient of Friction	D-1894	-	0.11 - 0.13
Heat Distortion Temp. 66 PSI	D-648	C	88
Coefficient of Thermal	D-696	F-1	5.5 x 10-5
ABRASION CHARACTERISTICS			
Taber Abrasion	D-1044	Mg/loss	N
Sand Slurry *			7

* Sand slurry condition - 7 hours in one part sand/ one part water slurry at 1725 RPM.

Carbon steel - 100, Hifax - 15. The lower the value, the more resistant to abrasion. Casing spacers shall be "center positioning" type. Height of risers and runners combined shall be sufficient to keep the carrier pipe bell, couplings, or fittings at least 0.75" from the casing pipe wall at all times and provide at least 1" clearance between runners and top of casing wall, to prevent jamming during installation.

D6-03 MANHOLES, CATCHBASINS, AND INLETS

D6-03.1 Precast Concrete Products

Precast concrete products for manholes, inlets, and catch basins shall comply with Section 7-05.2 of the Standard Specifications.

D6-03.2 Metal Covers

A. Castings

Metal castings for manhole rings, round covers, frames, grates, and rectangular covers shall conform to the Standard Details and Section 9-05.15 of the Standard Specifications as modified herein.

All catch basin grated covers in roadways shall be bolt-locking vaned ductile iron grates with cast iron frames, per these engineering standards or approved equal.

All grated covers shall have in raised letters "Outfall to Stream, Dump No Pollutants".

Manhole round covers and rectangular covers shall have the word "DRAIN" in block letters at least two (2) inches high, recessed so as to be flush with the surface.

When bolt locking covers and grates are required, the locking bolts shall be 5/8" - 11 NC stainless steel type 304 socket (allen) head bolts, 2 inches long.

Dipping, painting, welding, plugging or any repair of defects shall not be permitted in accordance with AASHTO M 306.

B. Hatches

Metal hatches and access covers shall be constructed with a non-slip treatment having a coefficient of friction between 0.6 and 1.0 wet, as determined by ASTM C1028-89. Hatches and access covers located on slopes of 4% or greater shall have a coefficient of friction between 0.8 and 1.0 wet, as determined by ASTM C1028-89. Prior to installation, the Contractor shall supply the Engineer with a shop drawing of the appurtenance specifying a coefficient of friction meeting or exceeding the above requirement. Hatches shall include recessed padlock hasps sized to accept the City of Bellevue Storm Division padlocks.

D6-03.3 Structure Backfill

In paved areas, backfill material (4 feet and deeper below finished grade) shall conform to Section 9-03.14(1) - Gravel Borrow of the Standard Specifications. The Contractor may request to use excavated material as trench backfill when it has been determined by the Engineer to be suitable and conforms to Section 9-03.14(1) - Gravel Borrow of the Standard Specifications and proper compaction levels can be achieved.

The top 4 feet around structures shall be backfilled with crushed rock conforming to Section 9-03.9(3) - Crushed Surfacing - Top Course of the Standard Specifications.

In unpaved areas, structure backfill material shall conform to Section 9-03.14(1) - Gravel Borrow of the Standard Specifications. The Contractor may request to use excavated material as structure backfill when it has been determined by the Engineer to be suitable and conforms to Section 9-03.14(1) - Gravel Borrow of the Standard Specifications and proper compaction levels can be achieved.

D6-04 FLOW CONTROL - DETENTION FACILITIES

D6-04.1 General

All covers and grates on access structures to the detention system shall be bolt locking.

D6-04.2 Control Structures

Precast concrete products for control structures shall comply with Section 7-05.2 of the Standard Specifications.

Flow restrictors in detention control structures shall be fabricated from 0.060" aluminum pipe, PVC pipe (Profile Wall, Schedule 40 or SDR 35), CPE, or HDPP (SDR 32.5).

Pipe support materials shall match restrictor (if metal). For plastic materials, aluminum (3” W x 0.060" T) or stainless steel (3”W x 0.090"T) shall be used. Pipe supports shall be fastened to the structure wall with 5/8-inch stainless steel expansion bolts or lag and shield.

Orifice plates shall be fabricated from aluminum plate (0.125"), high density polyethylene (HDPE) sheeting (0.25"), or PVC sheeting (0.25"). Orifice plates shall be bolted to the flange on the flow restrictor with stainless steel hardware. Orifices may be fabricated by drilling the specified diameter hole in an end cap.

Protective screening for orifices less than one (1) inch in diameter shall be hot-dipped galvanized, 0.5" x 0.5" "hardware cloth" or polymer geo-grid with the approximate same size openings.

DRAFT

D6-04.3 Ponds

Embankment material for detention ponds shall conform to the guidelines set forth in Volume II, Chapter 3 of the DOE Manual and DOE's Dam Safety Guidelines, Part IV: Design and Construction, Chapter 3 - "Geotechnical Issues."

Seed mixes for normally dry detention ponds are as follows:

Mix #1 - (Dry conditions)

30% Colonial Bentgrass
30% Kentucky Bluegrass
20% Tall Fescue
15% Perennial Rye grass
5% White or Red Clover

Application Rate = 120 lbs./acre

Mix #2 - (High groundwater conditions)

30% Creeping Red Fescue
30% Redtop Bentgrass
30% Meadow or Pacific Foxtail
5% Timothy
5% Birdsfoot Trefoil

Application Rate = 60 lbs./acre

Mix #3 is the seed mix for normally wet detention ponds and is shown in Table 6.1. The application rate for Mix #3 = 60 lbs./acre

Table 6.1 Mix #3 Wet Area Seed Mix*

Seed Type	% Weight	% Purity	% Germination
Tall or meadow fescue *Festuca arundinacea* or *Festuca elatior*	60-70	98	90
Seaside/Creeping bentgrass *Agrostis palustris*	10-15	98	85
Meadow foxtail *Alepocurus pratensis*	10-15	90	80
Alsike clover *Trifolium hybridum*	1-6	98	90
Redtop bentgrass *Agrostis alba*	1-6	92	85

*Seed mix taken from Table 4.1.6 from "BMP C120: Temporary and Permanent Seeding" of the DOE Manual.

For ponds requiring emergent wetland plant species, Table 6.2 lists recommended plant varieties.

DRAFT

Table 6.2 Recommended Emergent Wetland Plant Species*

Species	Common Name	Notes	Maximum Depth
INUNDATION TO 1 FOOT			
Agrostis exarata[(1)]	Spike bent grass	Prairie to coast	To 2 feet
Carex stipata	Sawbeak sedge	Wet ground	
Eleocharis palustris	Spike rush	Margins of ponds, wet meadows	To 2 feet
Glyceria occidentalis	Western mannagrass	Marshes, pond margins	To 2 feet
Juncus effusus	Soft rush	Wet meadows, pastures, wetland magins	To 2 feet
Juncus tenuis	Slender rush	Wet soils, wetland margins	
Oenanthe sarmentosa	Water parsley	Shallow water along stream and pond margins; needs saturated soils all summer	
Scirpus atrocinctus (formerly S. cyperinus)	Woolgrass	Tolerates shallow water; tall clumps	
Scirpus microcarpus	Small-fruited bulrush	Wet ground to 18 inches depth	18 inches
Sagittaria latifolia	Arrowhead		
INUNDATION 1 TO 2 FEET			
Agrostis exarata[(1)]	Spike bent grass	Prairie to coast	
Alisma plantago-aquatica	Water plantain		
Eleocharis palustris	Spike rush	Margins of ponds, wet meadows	
Glyceria occidentalis	Western mannagrass	Marshes, pond margins	
Juncus effusus	Soft rush	Wet meadows, pastures, wetland magins	
Scirpus microcarpus	Small-fruited bulrush	Wet ground to 18 inches depth	18 inches
Sparganium emmersum	Bur reed	Shallow standing water, saturated soils	
INUNDATION 1 TO 3 FEET			
Carex obnupta	Slough sedge	Wet ground or standing water	1.5 to 3 feet
Beckmania syzigachne[(1)]	Western sloughgrass	Wet prairie to pond margins	
Scirpus acutus[(2)]	Hardstem bulrush	Single tall stems, not clumping	To 3 feet
Scirpus validus[(2)]	Softstem bulrush		
INUNDATION GREATER THAN 3 FEET			
Nuphar polysepalum	Spatterdock	Deep water	3 to 7.5 feet
Nymphaea odorata[(1)]	White waterlily	Shallow to deep ponds	To 6 feet

Notes:

[(1)] Non-native species. *Beckmania syzigachne* is native to Oregon. Native species are preferred.

[(2)] *Scirpus* tubers must be planted shallower for establishment, and protected from foraging waterfowl until established. Emerging aerial stems should project above water surface to allow oxygen transport to the roots.

Primary sources: Municipality of Metropolitan Seattle, *Water Pollution Control Aspects of Aquatic Plants*, 1990. Hortus Northwest, *Wetland Plants for Western Oregon*, Issue 2, 1991. Hitchcock and Cronquist, *Flora of the Pacific Northwest*, 1973.

*Table taken from Table 6.4.1A "Emergent Wetland Plant Species Recommended for Wetponds" from the 2016 King County Surface Water Design Manual.

DRAFT

D6-04.4 Underground Detention Systems

All corrugated metal pipe and pipe arch shall be furnished with annular ends, neoprene gaskets, and lap type couplings.

Underdrains shall be a minimum of 6-inch diameter PolyVinyl chloride (PVC) pipe, SDR 35, with laser-cut slotted perforations.

Underdrains within the pipe trench shall be backfilled with material which conforms to Section 9-03.12(4) - Gravel Backfill for Drains of the Standard Specifications.

For Reinforced Concrete Pipe (RCP) and other rigid pipe, bedding material shall be in accordance with Section 9-03.12(3) - Gravel Backfill for Pipe Bedding of the Standard Specifications.

For Corrugated Metal Pipe (CMP – which includes steel and aluminum) and other flexible pipe, bedding material shall conform to Section 9-03.16 - Bedding Material for Flexible Pipe per the Standard Specifications.

Trench backfill material shall conform to Section 9-03.14 - Gravel Borrow of the Standard Specifications. Excavated material may be used as pipe bedding and/or trench backfill when it has been demonstrated by the Contractor to be suitable.

The following materials shall be used for vaults (Part A) and Tanks or Pipes (Part B), as follows:

A. Vaults

Materials for stormwater detention vaults shall be as approved by the City of Bellevue Building Official.

Any metal structural components shall be protected from corrosion and have a low maintenance coating. The Developer shall submit proposed metal protective coatings with supporting documentation for review prior to drainage plan approval. Coatings shall have a 50 year design life.

Backfill material shall conform to Section 9-03.14 - Gravel Borrow of the Standard Specifications. Excavated material may be used as backfill when it has been demonstrated by the Contractor to meet gradation and compaction requirements.

When the structural design does not take into account hydrostatic pressure or buoyancy, footing drains shall be provided around the perimeter of the vault.

Footing drains shall be a minimum of 6-inch diameter PolyVinyl chloride (PVC) pipe, SDR 35, with laser-cut slotted perforations.

Footing drains shall be backfilled with material which conforms to Section 903.12(4) - Gravel Backfill for Drains of the Standard Specifications.

For precast vaults, sealing between riser sections shall be accomplished by placing Portland cement mortar, compressible neoprene foam gaskets, asphaltic mastic material, or asphalt impregnated gasket materials between sections, as recommended by the manufacturer to produce a water-tight seal.

DRAFT

B. Tanks or Pipe

Only the pipe materials listed are approved for use in stormwater detention facilities. Materials shall meet the following sections of the Standard Specifications and as modified herein:

Reinforced Concrete Pipe (RCP), Cl. 3 min.	9-05.7(2)
Corrugated Aluminum Culvert Pipe	9-05.5
Corrugated Steel Culvert Pipe, Treatment 1	9-05.4
Corrugated Steel Pipe Arch, Treatment 1	9-05.4
Aluminum Coated (Aluminized) Corrugated Iron Or Steel Drain Pipe	9-05.1(2)
Corrugated Polyethylene Pipe	9-05.20

D6-05 ON-SITE STORMWATER MANAGEMENT SYSTEMS

Perforated pipe for roof downspout systems and infiltration trenches shall conform to Section D6-02.3 herein. Single wall CPE pipe is not allowed.

Gravel backfill for infiltration systems shall meet the requirements for coarse aggregate for Portland cement concrete, Grading No. 4 or 5 as listed in Section 9-03.1(3)C of the Standard Specifications, unless otherwise specified by the qualified professional.

LID BMPs shall conform to the DOE Manual and the LID Technical Guidance Manual for Puget Sound (PSP and WSUPCE 2012).

DRAFT

END OF CHAPTER D6

DRAFT

CHAPTER D7 – METHODS OF CONSTRUCTION
TABLE OF CONTENTS

Not included in draft document.

DRAFT

CHAPTER D7 – METHODS OF CONSTRUCTION

D7-01 GENERAL

All construction on City rights-of-way shall be done in accordance with the City's standards and the procedures and methods set forth in the Standard Specifications as modified herein.

Prior to the final inspection, the Contractor shall clean the storm drain system and any off-site drainage systems affected by construction activities by a method approved by the City. Wastewater from such cleaning operations shall not be discharged to the storm drainage system or surface waters.

Prior to the installation of hard surfacing, conveyance, On-site Stormwater Management, Flow Control, and Water Quality Treatment BMPs shall be operational.

Prior to occupancy of any single phase of a phased development, storm drainage facilities shall be completed and operational to provide conveyance, on-site stormwater management, flow control, and water quality treatment for the phase for which occupancy is requested.

Contractor shall provide Manufacturer's Certificate of Compliance in accordance with Section I - 06.3 of the Standard Specifications when requested by the City for all pipe, fittings, precast concrete products, castings, and manufactured fill materials to be used in the project.

Testing of the stormwater management facilities, by the Contractor, when required by the City, shall conform to the testing requirements for the particular component of the system as set forth in the Standard Specifications and issued permits.

Documentation for the newly installed stormwater management facilities required by these Standards, the Developer Extension Agreement, or issued permits shall be submitted and approved prior to construction acceptance.

D7-02 CLEARANCE BETWEEN UTILITY LINES

If the minimum vertical distances between utility pipes are less than 6-inches and such installation is approved by the City, a pad shall be placed between the pipes. The pad shall be Outside Diameter (O.D.) x O.D. x 2.5 inches thick minimum or as required to protect the pipes. Above O.D. is equal to the outside diameter of the larger pipe. The pad shall be a polyethylene foam plank (Dow Plastics Ethafoam" 220), or approved equal. Additional measures may be necessary to ensure system integrity and may be required as evaluated by the City on a case by case basis.

D7-03 CONNECTIONS/MODIFICATIONS TO PUBLIC DRAINAGE SYSTEM

When connecting existing metal storm pipe to new catch basins, the Contractor shall treat the newly exposed end of the pipe per Section 9-05.4(4) - Asphalt Coatings and Paved Inverts of the Standard Specifications.

Where new pipe is connected to existing, the Contractor shall verify the type of existing pipe and join in kind with new. If the existing pipe is of a nonapproved material or of dissimilar materials, the Contractor shall connect the new to the existing with an appropriate coupling device. If a water tight coupling cannot be installed, then connection will be made with a structure. See Section D6-02.8 herein for coupling material requirements.

The following connections to a pipe system shall be made only at structures:

1. When the inletting pipe is greater than 8 inches in diameter; or

2. When roadway, driveway or parking lot runoff is conveyed; or
3. When commercial and multi-family stormwater pipes connect to the municipal conveyance system; or
4. When connecting to CMP conveyance systems.

Roof/footing/yard drain pipes, 8 inches or less in diameter, from single family residences, may be connected to the existing stormwater conveyance system by core drilling the appropriate hole and installing a saddle tee on concrete, PVC and DI stormwater pipes only.

For profile wall PVC or CPE pipe, an insert-tee or saddle tee may be used. For new stormwater conveyance systems, roof/footing/yard drain pipes shall be connected with tee fittings.

When a connection is made without the benefit of a structure, a clean-out shall be provided upstream of each tee on the inletting private drainage system pipe.

When connecting pipes at structures, match crowns when possible.

If finished floor elevation is lower than adjacent street (top of curb) and a connection to public street drainage system is made, at minimum the property owner shall install a check valve.

D7-04 CONVEYANCE SYSTEMS

D7-04.1 General

Methods of construction for storm drain pipelines and culverts shall conform to Section 7-04.3 - Construction Requirements of the Standard Specifications and the DOE Manual (for storm drainage systems) as modified herein.

D7-04.2 Locators

Installation of all non-linear plastic pipe, lot stubs and underdrains shall include a locator wire.

The locator wire shall be installed on top of and secured to the pipe. The Contractor shall furnish and install a No. 12 AWG solid copper wire between drainage structures and extend the wire at least one (1) foot into the structure.

Ends of each storm drain stub at the property line shall be capped and located with a 2" X 4" board, embedded to the stub cap, with a copper locator wire attached, and marked permanently "STORM". The stub depth shall be indicated on the marker.

D7-04.3 Storm Drain Trench

Trenches shall be excavated to the width, depth, and grade as set forth in Standard Details herein. Material excavated that is unsuitable for backfill shall not be used for filling on or around surface water facilities.

In paved areas within the public right-of-way, provide a neat vertical cut in existing pavement by saw cutting.

D7-04.4 Pipe Bedding

Pipe bedding shall conform to Section 7-08.3(1)C - Bedding the Pipes of the Standard Specifications as modified herein in order to provide uniform support along the entire pipe barrel, without load concentration at joint collars or bells.

DRAFT

Bedding disturbed by pipe movement, by removal of shoring, or by movement of trench shield or box, shall be reconsolidated prior to placing backfill.

Pipe bedding shall be placed in loose layers and compacted to 90% maximum dry density. Lifts not more than 6 inches in thickness shall be placed and compacted along the sides of the pipe to a height of at least 6 inches above the top of the pipe. Material shall be carefully worked under the pipe haunches and then compacted.

Jetting is not an allowable method to compact the bedding materials.

D7-04.5 Laying Storm Sewer Pipe

Laying pipe shall be in accordance with Section 7-08.3(2)B - Pipe Laying of the Standard Specifications and include the following:

Survey line and grade shall be furnished by the Developer in a manner consistent with accepted practices.

Existing flows shall be diverted away from the pipe segment being worked on by methods approved by the City.

Pipe shall be lowered into the trench by means of ropes, tripod, crane, or other suitable means. Pipe shall not be dropped or handled roughly. Pipe shall be inspected for defects prior to use and any defective pipe shall be removed from the job site.

Tees and other fittings shall be installed as shown on the Standard Details and the approved plans, or as otherwise directed by the City. These items shall not be backfilled until the City has recorded their exact location.

D7-04.6 Backfilling Trenches

Backfilling shall be accomplished in accordance with Section 2-09 - Structure Excavation of the Standard Specifications as modified herein:

In paved areas, trench backfill material shall be compacted to 95% maximum dry density per Section 2-03.3(14)D - Compaction and Moisture Control Tests of the Standard Specifications.

In unpaved areas, trench backfill material shall be compacted to 90% maximum dry density per Section 2-03.3(14)D - Compaction and Moisture Control Tests of the Standard Specifications.

The Contractor shall arrange for compaction testing to be performed by a certified technician. The Contractor shall provide the Engineer with one copy of the compaction test report within 24 hours of the completion of the test.

Compaction tests shall be made at a maximum of 4 foot depth increments with a minimum of one test for any backfilling less than 4 feet in depth. The maximum space between tests shall not exceed 100 linear feet.

For mechanical compaction methods ("hoe pack," vibratory roller, static roller, etc.), the maximum backfill lift shall not exceed 2 feet between the application of compaction equipment.

For manual compaction methods (all walk-behind equipment, "jump jack," etc.), the maximum backfill lift shall not exceed 1 foot between the application of compaction methods.

Jetting is not an allowable method to compact the trench backfill.

DRAFT

Surface restoration shall be as specified in the Right-of-Way Use Permit and as shown on the approved plans.

See Appendix D-1 for trench backfill Standard Details.

D7-04.7 Compaction

All backfill shall be mechanically compacted in accordance with Section 2-09.3(I)E - Backfilling - Compaction of the Standard Specifications as modified herein. Each layer shall be compacted to 95% (paved areas) or 90% (unpaved areas) of the maximum dry density per Section 2-03.3(14)D - Compaction and Moisture Control Tests, of the Standard Specifications.. When requested by the City, test reports shall be provided by the Contractor to certify that the compaction meets the required levels.

D7-04.8 Private Drainage Systems

The footing drainage system and the roof downspout system shall be separate pipe systems up to the on-site collection system.

Corrugated polyethylene tubing (CPT) for overbank drains shall be a continuous piece of tubing from the top of the slope to the discharge point at the bottom of the slope. No joints between the connection to the roof, footing, and yard drains and the discharge point will be allowed. CPT is not allowed in the right-of-way.

D7-05 MANHOLES, CATCH BASINS, & INLETS

D7-05.1 General

The construction of manholes, catch basins, and inlets shall conform to Section 7-05.3 - Construction Requirements of the Standard Specification as modified herein.

Manholes, catch basins, and inlets shall be precast concrete unless approved otherwise by the City.

All structure ladders, when used, shall be firmly attached using stainless steel hardware and extend to the bottom of the structure.

When connecting to a concrete structure, openings must be core-drilled unless an existing knockout is available. Connections shall be made with watertight rubber boots, sand collars, manhole adapters, or other approved watertight connectors except for : 1) concrete; 2) ductile iron; 3) corrugated metal pipe. For 1,2, and 3 above, connections shall be made with non-shrink Portland Cement Grout to make a watertight connection.

Manholes, catch basins or inlets in easements shall be constructed to provide a stable, level grade for a minimum radius of 2.5 feet around the center of the access opening.

D7-05.2 Backfilling Structures

Backfilling shall be accomplished in accordance with Section 2-09 - Structure Excavation of the Standard Specifications as modified herein:

> In paved areas, backfill material shall be compacted to 95% maximum dry density per Section 2-03.3(14)D - Compaction and Moisture Control Tests of the Standard Specifications.
>
> In unpaved areas, backfill material shall be compacted to 90% maximum dry density per

Section 2-03.3(14)D - Compaction and Moisture Control Tests of the Standard Specifications.

The Contractor shall arrange for compaction testing to be performed by a certified technician. The Contractor shall provide the Engineer with one copy of the compaction test report within 24 hours of the completion of the test.

Compaction tests shall be made at a maximum of 4 foot depth increments with a minimum of one test for any backfilling less than 4 feet in depth. At least one (1) compaction test shall be performed at each backfilled structure or for every 50 CY of backfill placed. If the structure (e.g. manhole, catch basin or inlet) is part of a pipeline trench, then trench compaction testing frequency governs.

For mechanical compaction methods ("hoe pack," vibratory roller, static roller, etc.), the maximum backfill lift shall not exceed 2 feet between the application of compaction equipment.

For manual compaction methods (all walk-behind equipment, "jump jack," etc.), the maximum backfill lift shall not exceed 1 foot between the application of compaction methods.

Jetting is not an allowable method to compact the structure backfill.

Surface restoration shall be as specified in the Right-of-Way Use Permit and as shown on the approved plans.

D7-05.3 Adjusting Manholes and Catch Basins to Grade

Where shown on the approved plans or as directed by the City, existing manholes, catch basins and inlets shall be adjusted to conform to finished grade in accordance with Section 7-05.3(l) - Adjusting Manholes and Catch Basins to Grade of the Standard Specifications as modified herein. This work shall be completed within 14 calendar days of installing the final lift of pavement.

Where riser bricks (blocks) are used to bring the frame to grade, the maximum height of the brick shall be two rows. If more than two rows of bricks are required, a precast riser section shall be used along with no more than two rows of bricks to complete the adjustment.

Bricks, grade rings and risers shall be wetted just prior to being used and laid with "shove joints." Special care shall be taken to see that all joints are well filled with mortar.

D7-06 FLOW CONTROL - DETENTION FACILITIES

D7-06.1 Control Structures

Follow construction practices set forth for manholes, catch basins, and inlets.

D7-06.2 Ponds

A. Embankments

Fill placed around structures in the berm embankment shall be placed in four (4) inch maximum lifts and compacted to 95 percent of ASTM D- 1557.

B. Vegetation & Landscaping

DRAFT

Vegetation and landscaping shall conform to Section 8-02 - Roadside Planting of the Standard Specifications.

For City maintained facilities, all plant material shall be guaranteed for a period of one (1) year after acceptance. Defective materials shall be promptly replaced in like kind and size. The guarantee period may be extended for those defective materials which are replaced.

D7-06.3 Underground Detention Systems

A. Vaults

Cast-in-Place and Precast concrete vaults shall conform to Section 6-02 - Concrete Structures of the Standard Specifications as modified herein and as directed by the Building Official.

B. Tanks or Pipes

Tanks and pipes used for stormwater detention systems shall conform to the applicable sections of Division 7 - Drainage Structures, Storm Sewers, Sanitary Sewers, Water Mains, and Conduits of the Standard Specifications as modified herein.

D7-06.4 Storm Water Detention Facility Leakage Testing

A. Dry Ponds

Leakage rates shall not exceed the maximum allowable infiltration rate of 2 inches per hour. For infiltration rates in excess of the maximum, a liner system shall be installed.

B. Wet Ponds

The pond shall be tested for leakage. Wet ponds shall be filled to the 2-year water surface elevation. Pipe plugs shall be inserted into all inlet and outlet piping. The maximum allowable leakage shall not exceed one percent (1%) of volume below the 2-yr water surface elevation over a 24-hour test period.

C. Pipe/Tank Systems

Pipe/tanks systems shall be free from visible leaks.

All penetrations shall be sealed to prevent leaks.

Shear gates and valves shall not leak.

Pipe/tank systems with footing or underdrain systems: The detention system shall be tested for leakage. Systems shall be filled to the 2-year water surface elevation. Pipe plugs shall be inserted into all inlet and outlet piping. The maximum allowable leakage shall not exceed one percent (1%) of volume below the 2-yr water surface elevation over a 24-hour test period.

D. Precast and Cast-In-Place Vaults

Precast and cast-in-place vaults shall be free from visible leaks. Cold joints shall include water stops to prevent leakage. Concrete mix designs and placement shall produce compact, dense and impervious concrete with smooth faces. Admixtures should be considered to minimize porosity. All rock pockets, voids, seams, joints, cracks and other defects shall be cleaned and repaired to prevent leakage. Acceptable repairs include epoxy injection, chemical grout injection, epoxy grouting and/or proprietary concrete repair methods as may be approved by the City. “Sacking” with Portland cement grout will not be allowed.

All penetrations shall be grouted to prevent leaks.

DRAFT

Shear gates and valves shall not leak.

Vaults with footing or underdrain systems: The vault shall be tested for leakage. Vaults shall be filled to the 2-year water surface elevation. Pipe plugs shall be inserted into all inlet and outlet piping. The maximum allowable leakage shall not exceed one percent (1%) of volume below the 2-yr water surface elevation over a 24-hour test period.

D7-07 INFILTRATION SYSTEMS

Construction of infiltration systems for flow control and treatment shall conform to Chapter D5 of these Standards and Volume III, Section 3.3 of the DOE Manual except as modified herein:

- Excavation of infiltration systems shall be done with a backhoe or excavator working at "arms length" to avoid the compaction and disturbance of the completed infiltration surface.
- The facility site shall be cordoned off so that construction traffic does not traverse the area.
- An inspection by the civil/geotechnical engineer of record, of the exposed soil shall be made after the infiltration system is excavated to confirm that suitable soils are present.
- Infiltration systems for flow control shall not be utilized until construction is complete and disturbed areas have been stabilized, as determined by the City, to prevent sedimentation of the infiltration system. Temporary flow control facilities may be needed to utilize this option.

D7-08 ABANDONING FACILITIES

D7-08.1 Abandoning Pipe In Place

Any property owner who plans to demolish or remove any structure connected to the public storm drainage system shall notify the utility and complete a utility abandonment form prior to the commencement of such work.

Storm drainage pipe demolition shall be performed prior to removal of building foundation. The storm drainage pipe for each building shall be excavated and removed from the house connection to the property line or the main as specified by the Utility. The Contractor shall cap the end of the the storm drainage pipe to remain in place. Storm drainage pipe demolition shall be performed in the presence of the City of Bellevue Sewer Maintenance Engineering Technician (inspector). The inspector will inspect the stub to determine whether the storm drainage pipe can be re-used. If the inspector determines that the storm drainage pipe cannot be re-used, the property owner shall either abandon the storm drainage pipe or upgrade the portion of storm drainage pipe on private property through a storm drainage permit or through a storm system extension agreement. The City will be responsible for repair or replacement of the portion of the storm drainage pipe located within public rights-of-way and public easements.

When a property is redeveloped, the property owner shall abandon storm drainage pipes that are no longer needed. In addition, the property owner shall abandon all unused provisional storm drainage pipes within the scope of the redevelopment project. The allowable methods of storm drainage pipe abandonment are as follows:

- Cap the storm drainage pipe at the main.

DRAFT

- Install a cured-in-place liner in the mainline to cover the lateral storm drainage pipe inlet and fill storm drainage pipe to be abandoned with controlled density fill.
- Install a cured-in-place spot repair liner in the mainline to cover the lateral storm drainage pipe inlet and fill storm drainage pipe pipe to be abandoned with controlled density fill. The spot repair liner shall extend minimum of one foot upstream and downstream of the edge of the storm drainage pipe opening.
- Other trenchless technology proposed by the property owner, subject to City review and approval.

The Contractor shall completely fill the pipeline to be abandoned with sand, concrete, or controlled density fill; or remove it.

D7-08.2 Abandoning Structures

Abandonment of structures shall be completed only after piped systems have been properly abandoned. Structures within the public right -of-way, a public easement or which is part of the publicly-owned and maintained system must be:

- Removed completely according to Section 2-02 of the current Standard Specifications; or,
- Abandoned according to Section 7-05.3 of the current Standard Specifications, provided no conflicts with new utilities or improvements arise.

D7-09 TESTING OF GRAVITY STORM DRAINS

Methods of testing gravity storm drains shall be at the option of the Contractor unless otherwise specified herein.

D7-09.1 Water Test

Tests for water tightness shall be made by the Contractor in the presence of the Engineer. A test shall be made every section of the storm drain, including the side storm, after completion of backfill. Where the groundwater table is so high as to preclude a proper exfiltration test, an infiltration test may be used.

The exfiltration test shall be made by plugging the inlets of the lower manhole and filling the test section with water to a height of six (6) feet above the crown of the storm drain at the upper end of the storm drain being tested.

In no case shall the static level be less than six (6) feet above the water table at the upper end of the storm drain being tested. Where the static pressure on the lower manhole would exceed 20 feet, the Contractor may test the storm drain between manholes in two or more sections. The Contractor may provide for sectional testing by installing tees in the main line. The tees shall be of a type that permit plugging of both the upper and lower run of the tee. The required static water head may be obtained by installing vertical lengths of pipe in the tee or from the upper end of the storm drain pipe being tested at shallow catch basins.

The Contractor shall provide a groundwater observation well at each manhole for determining the level of the groundwater during the test. The observation well shall consist of one inch plastic pipe installed vertically adjacent to the manhole. The lower end of the test well shall be placed in a one (1) cubic yard pocket of washed gravel and shall be at the same elevation as the invert of the

DRAFT

manhole. The upper end of the test well shall be a maximum of two (2) feet below the finished grade elevation and shall be plugged and exposed until completion of the test. The time of exfiltration tests shall be a minimum of one (1) hour. The leakage during the test shall not exceed the following allowances:

Allowable Leakage - Exfiltration or Infiltration

Allowable Leakage in gal\100 linear feet\hr. Head above Crown on Lower End of Test Section.

Table 7.1 – Allowable Leakage Rates (in units of Gallons per 100 Lineal Feet of Pipe per Hour)

Pipe	6 Ft.	8 Ft.	10 Ft.	12 Ft.	14 Ft.	16 Ft.
6	0.6	0.7	0.7	0.8	0.8	0.9
8	0.8	0.9	1.0	1.0	1.1	1.2
10	1.0	1.1	1.2	1.3	1.4	1.5
12	1.2	1.3	1.4	1.6	1.7	1.8
15	1.5	1.7	1.8	2.0	2.1	2.3
18	1.8	2.0	2.2	2.3	2.5	2.7
24	2.4	2.6	2.9	3.1	3.4	3.6

Repair by chemical grouting will not be allowed.

For static head above the basic eight feet at the crown of the storm drain at the lower end of the test section, the allowable leakage shown above shall be increased at a ratio of 5 percent per foot increase.

Where the groundwater exceeds a height of six feet above the crown of the storm drain at the upper end of the test section, the section shall be tested by infiltration. The infiltration test shall be conducted by placing a plug in the inlet storm drain at the upper manhole and inserting an approved measuring device in the inlet storm drain at the lower manhole. Prior to making measurements, care shall be taken to assure that the flow over or through the measuring device is constant. A minimum of four measurements shall be made over a period of one hour.

The acceptance water test shall be made after backfilling has been completed and compacted, and ATB has been placed in areas to be paved.

D7-09.2 Air Testing

The Contractor may use a low-pressure air test at his or her option. The following procedures shall be used on conducting the low-pressure air test. The Contractor shall furnish all facilities and personnel for conducting the test under the observation of the Engineer. The equipment and personnel shall be subject to the approval of the Engineer.

The Contractor may desire to make an air test prior to backfilling for his or her own purposes. However, the acceptance air test shall be made after backfilling has been completed and compacted, and ATB has been placed in areas to be paved.

All wyes, tees, or end of side storm drain stubs shall be plugged with flexible joint caps, or acceptable alternate, securely fastened to withstand the internal test pressures. Such plugs or caps shall be readily removable and their removal shall provide a socket suitable for making a flexible jointed lateral connection or extension. No double plugs shall be allowed.

Immediately following the pipe cleaning, the pipe installation shall be tested with low-pressure air. Air shall be slowly supplied to the plugged pipe installation until the internal air pressure

DRAFT

reaches 4.0 pounds per square inch greater than the average back pressure of any groundwater that may submerge the pipe. At least two minutes shall be allowed for temperature stabilization before proceeding further.

The requirements of this specification shall be considered satisfied if the time required in seconds for the pressure to decrease from 3.5 to 2.5 pounds per square inch greater than the average back pressure of any groundwater is at least as much as the values provided in Table 7.2.

Table 7.2 - Time to Decrease Pressure

Size of Pipe	Minmum Number of Seconds per Lineal Foot of Pipe
4 inch	0.11
6 inch	0.25
8 inch	0.46
10 inch	0.72
12 inch	1.04
15 inch	1.63
18 inch	2.35
21 inch	3.20
24 inch	4.18

The use of air pressure for testing storm drain lines creates hazards that must be recognized. The Contractor shall be certain that all plugs are securely blocked to prevent blowouts. An air supply regulator shall be installed on the air supply line to the storm drain that shall permit a maximum of 10 psi in the line to be tested. All pressure shall be relieved from the storm section being tested prior to removal of test plugs.

D7-9.3 Deflection Test for Flexible Pipe

Storm drains constructed of flexible pipe shall be deflection tested not less than 30 days after the trench backfill and compaction has been completed, and ATB has been placed in areas to be paved. The test shall be conducted by pulling a solid pointed mandrel with a circular cross section with diameter equal to 95% of the inside pipe diameter through the completed pipeline. Minimum length of circular portion shall be equal to the diameter of the pipe. Pull shall be manual without mechanical assistance and the mandrel shall negotiate deflected section freely. Testing shall be conducted on a manhole to manhole basis and shall be done after the line has been completely flushed out with water. Contractor shall locate and repair any sections failing to pass the test, and retest the section.

D7-10 Inspection for Stormwater Conveyance and Culvert Pipes

Inspection of stormwater conveyance and culvert pipes shall be conducted using closed circuit television (CCTV) according to the requirements in this section.

D7-10.1 Data Requirements

Inspection/observation data shall be in either PACP 4.4 or Granite 4.5.x database format, and shall be submitted for approval prior to beginning work.

D7-10.2 Video Media Requirements

Video media shall be recorded in color at a minimum of 640 x 480 resolution with a minimum frame rate of 30 frames per second. The digital video compression will be MPEG-1. The audio

portion shall be embedded in the video file (not a separate audio file) and shall be sufficiently free from electrical interference and background noise to provide complete and intelligible oral reporting.

D7-10.3 Equipment

CCTV equipment shall include television cameras, a television monitor, cables, power sources, side-launch capable if necessary, and other equipment. Focal distance shall be adjustable through a range from 6 inches to infinity. The CCTV equipment shall include a distance measuring instrument (DMI) to measure the horizontal distance traveled by the camera. The DMI readout shall appear continuously on the video produced by the inspection and shall be accurate to less than 1 percent error over the length of the section of pipeline being inspected. The length shall be measured from the centerline of the manhole or catch basin to the centerline of the next manhole or catch basin.

The CCTV inspection system shall be performed utilizing one of the following video camera systems:

- Remote-focus stationary lens cameras;
- Rotating lens cameras; or
- Pan-and-tilt cameras.

D7-10.4 Video File Name Requirements

Video file names shall contain the pipe segment asset number being inspected, the date and time of the video inspection, and optionally a sequence number if multiple inspections are performed. (e.g. ‘123456-20151231.MPG’)

D7-10.5 Photo Media Requirements

Photo media shall be in JPEG format with a minimum of 16 bits per pixel color depth. Photo resolution shall be high enough to capture adequate details of an observation/defect.

D7-10.6 Photo File Name Requirements

Photo file names shall contain the pipe segment asset number being inspected, the date and time of the video inspection, the observation code, the distance from the inspection starting point, and optionally a sequence number if multiple photos are taken for the same observation. (e.g. ‘123456-20151231-DAGS-35FT.JPG’)

D7-10.7 Media Delivery Requirements

Digital media shall be either USB hard drive, USB flash drive, or DVD data disc.

D7-10.8 Ponding

Maximum allowable ponding depth detected by video inspection shall be 0.5 inches.

D7-10.9 Corrections

Defects and deficiencies discovered by CCTV shall be corrected and re-CCTV’ed.

D7-11 TESTING OF CONCRETE STRUCTURES

DRAFT

Following backfilling, concrete structures shall be vacuum tested per ASTM C1244, except as specified otherwise herein to ensure that the structure is watertight:

At least twenty-five percent (25%) of the total storm drainage manholes, catch basins and other structures shall be vacuum tested. Structures to be tested shall be selected by the Engineer at the time of testing. No advance notice will be provided to the Contractor as to which structures will be tested. If more than ten percent (10%) of the structures tested fail the initial test, an additional twenty-five percent (25%) of the total structures shall be tested. This process shall continue until a series of structures (25% of the total) successfully tests with no more than 10% initial failure or until all stuctures have been tested. Additional vacuum testing for specific structures in areas susceptible to infiltration shall be required and does not count toward the required 25%.

The Contractor shall furnish all equipment and labor required, including necessary piping/hoses, pneumatic plugs, test vacuum equipment (vacuum pump and vacuum plate/head), vacuum gauge, and second timer. The vacuum gauge shall have a maximum range of 0-30 inches of mercury (Hg) and the vacuum gauge intervals shall be ½ inch increments.

The vacuum test shall be performed by the Contractor in the presence of City of Bellevue personnel. The Contractor shall furnish test reports of each test to the Engineer.

D7-11.1 Testing

If a coating or lining has been applied to the interior of the manhole, the vacuum test must not be performed until the coating or lining has been cured according to the manufacturer's recommendations. In addition, if it is an existing manhole being tested, it must be structurally sound prior to vacuum testing.

Drop connections shall be installed prior to testing.

The vacuum test shall include testing of the seal between the cast iron frame and the concrete cone, slab or grade rings.

After cleaning the interior surface of the manhole, the Contractor shall place and inflate pneumatic plugs in all the connecting pipes with the exception of storm laterals to isolate the manhole. Complete storm services entering the manhole shall be a part of the manhole vacuum test.

The vacuum plate/head shall be placed on top of the manhole lid frame. The vacuum pump shall be connected to the outlet port with the valve open. When a vacuum of ten (10) inches of mercury has been attained, the outlet valve shall be closed and the test period is started. The minimum test period is determined from the following table:

Table 7.3 – Minimum Test Period

Depth of Manhole	Time (Seconds)		
(Feet)	48 Inch Dia.	60 Inch Dia.	72 Inch Dia.
4	10	13	16
8	20	26	33
12	30	39	49
16	40	52	67
20	50	65	81
24	59	78	97
26	64	85	105
28	69	91	113

30	74	98	121
Add for each additional 2 feet of depth:	5	6.66	8

Notes:

Dia. = Diameter.

a - Measurements taken from ASTM C1244.

All pneumatic plugs shall be removed from the manhole after the test.

D7-11.2 Failure

Any manhole that fails the initial vacuum test must be repaired with an approved non-shrink grout on the interior and exterior of the manhole. Any repair between the pipes and manhole (gasket waterstop area) requires the removal of the pipe by means of coring and the installation of a new pipe with waterstop (grouting the annular opening). Upon completion of the repairs, the manhole shall be retested as described in the above test procedures.

Any manhole that fails the second vacuum test must be removed and replaced with a new manhole. The new manhole shall not be backfilled until it has been tested and passed the above test procedures.

D7-11.3 Acceptance

The manhole shall have passed the vacuum test if the manhole vacuum does not drop below 9-inches of mercury during the minimum specified test period.

DRAFT

D7-12 TRENCHLESS CONSTRUCTION

The use of trenchless construction methods such as pipe bursting and horizontal directional drilling shall be considered by the City on a case-by-case basis under the following conditions:

A. HDPE DR 26 or thicker-walled pipe required.

B. Romac 501 transition couplings (4") are required at both ends.

C. The installed pipe must be electronically located and marked on the ground for measurement in order to draw the as-built schematics.

D. The pipe must be video-taped following installation, with water running. The tape must be provided to the Inspector to approve the installation or require corrections.

E. Pipe bursting is not allowed on private property or Right-of-Way without the appropriate permission, such as an easement or Right-of-Way use permit.

D7-13 TRENCH EXCAVATION

Trenches shall be excavated to the line and grade designated by the Engineer and in accordance with the Standard Details. Trenches shall comply with OSHA and WISHA requirements regarding worker safety. The trench width at the top of the pipe shall be 30 inches for pipe up to and including 12 inch inside diameter and the outside diameter of the pipe barrel plus 16 inches for pipe larger than 12 inch inside diameter. Where higher strength pipe or special bedding is required because of excess trench width, it shall be furnished.

The trench shall be kept free from water until joining has been completed. Surface water shall be diverted so as not to enter the trench. The Contractor shall maintain sufficient pumping equipment on the job to insure that these provisions are carried out. The Contractor shall perform all excavation of every description and of whatever substance encountered as part of his trench excavation cost. Unsuitable material below the depth of the bedding shall be removed and replaced with satisfactory materials as determined by the Engineer.

Trenching operations shall not proceed more than 100 feet in advance of pipe laying except with written approval of the Engineer.

Providing sheeting, shoring, cribbing, cofferdams, and all aspects involved therein shall be the sole responsibility of the Contractor. Such trench/excavation protection shall comply with the requirements of Section 2-09 - Structure Excavation and Section 7-08.3(1)B - Shoring of the Standard Specifications, Chapter 49.17 RCW of the Washington Safety and Health Act, and Part N – Excavation, Trenching, and Shoring of Chapter 296-155 WAC.

When trenching operations take place in the public right-of-way, the pavement, and all other improvements, shall be restored as required by the Right-Of-Way Use Permit.

DRAFT

END OF CHAPTER D7

DRAFT

CHAPTER D8 – NATURAL SYSTEMS
TABLE OF CONTENTS

Not included in draft document.

DRAFT

CHAPTER D8 – NATURAL SYSTEMS

D8-01 GENERAL

Over 60 miles of open streams wind through Bellevue and over 800 acres of wetlands have been protected, preserving the City's natural setting in the midst of an urban environment. The beneficial uses of small urban streams and wetlands which the City seeks to preserve are habitat, stormwater conveyance and attenuation, open space and resource preservation, recreation, and aesthetics. Impacts to natural systems (streams, lakes, wetlands, etc.) shall be minimized in order to ensure hydraulic capacity and water quality.

D8-02 STREAMS

When modifications of a stream channel are included as part of a project, such modifications shall not result in reasonably avoidable:

- decreased hydraulic capacity; and
- damage to existing drainage courses, drainage facilities, streams, and surface waters by erosion, siltation or sedimentation; and
- water quality degradation; and
- increases in downstream water velocity; and
- deterioration of ground water resources; and
- deterioration of aquatic wildlife habitat;
- all as determined by the City.

It is the Developer's responsibility to ensure that all stream work be consistent with the floodplain management policies and regulations and as set forth in the Land Use Code 20.25H, the Storm and Surface Water Utility Code, 24.06, and the Clearing and Grading Code, 23.76.

All stream work shall be consistent with the requirements of any public agencies other than the City (such as the Washington State Department of Fish & Wildlife, the Washington State Department of Ecology, and/or the Army Corps of Engineers). It shall be the responsibility of the Developer to comply with any other agency's requirements.

Where fish bearing streams are rehabilitated as part of the project, such rehabilitation shall be designed and constructed so as to provide diversified habitats for a variety of stream organisms considering the following:

- Sufficient water depth to support fish and other aquatic life during low flows;
- Diversity of water velocities through the use of pools and riffles;
- A meandering channel to facilitate features mentioned above; and
- Sufficient stream bed gradient to provide proper flow velocities.

DRAFT

D8-03 WETLANDS

Discharges to wetlands shall maintain the hydrologic conditions, hydrophytic vegetation, and substrate characteristics necessary to support existing and designated uses. The hydrologic analysis shall use the existing land cover condition to determine the existing hydrologic conditions unless directed otherwise by a regulatory agency with jurisdiction. Stormwater runoff from such discharges shall be limited to: 1) 50 percent of the existing 2-year design storm peak runoff rate for the area tributary to the wetland; 2) a rate as determined by a qualified wetlands biologist to maintain the hydrologic conditions, hydrophytic vegetation, and substrate characteristics as required above; or 3) a rate specified by a resource agency having jurisdiction over the wetlands, that maintains the hydrologic conditions, hydrophytic vegetation, and substrate characteristics required above. Runoff in excess of the specified rate shall be bypassed around the wetland.

While it is always necessary to pre-treat stormwater prior to discharge to a wetland, there are limited circumstances where wetlands may be used for additional treatment and detention of stormwater. These situations are considered in Guide Sheet 2 in Appendix I-D in the DOE Manual.

Stormwater treatment and flow control facilities shall not be built within a natural vegetated buffer, except for:

- Necessary conveyance systems as approved by the Permittee; or
- As allowed in wetlands approved for treatment and detention in accordance with Guide Sheet 2 in Appendix I-D of the DOE Manual.

When stormwater treatment and flow control facilities can be built within a wetland, the facilities must be designed in accordance with other Chapters D3, D4, and D5 in these Standards.

An adopted and implemented basin plan prepared in accordance with the provisions of BCC 24.06.140 may be used to develop requirements for wetlands that are tailored to a specific basin.

When a wetland is allowed to be filled per the Land Use Code, runoff treatment and conveyance equivalent to that provided by the existing wetland to be filled is required in addition to any other runoff treatment required by these standards and applicable codes.

DRAFT

END OF CHAPTER D8

DRAFT

APPENDIX D1 DEFINITIONS, REFERENCES, AND ABBREVIATIONS

A-D1-01 DEFINITIONS

The following terms as used in this document shall be defined and interpreted below. Other terms used in the Standards are defined and interpreted in the Storm and Surface Water Utility Code BCC 24.06.040 and the Clearing and Grading Code BCC 23.76.030.

"BCC"

Bellevue City Code.

"BMP"

Best Management Practice.

"Contractor"

The person, partnership, firm or corporation contracting to do the work under these Documents. The term shall also include the Contractor's agents, employees and subcontractors.

"Details or Additional Drawings"

All details or drawings prepared as part of the Plan set, or for the revision of the same, all as herein provided.

"Developer"

Any individual, company, partnership, joint venture, corporation, association, society or group that has made, or intends to make, application to the City for permission to construct a surface water system connection, or extension, to the surface water system.

"DOE Manual"

"Stormwater Management Manual for Western Washington," Washington State Department of Ecology, December 2014. When referenced, drainage systems shall conform to the criteria set forth in the DOE Manual. Such criteria, unless modified herein, shall be the minimum standard which surface water systems must meet.

"Engineer"

The City of Bellevue Utilities Assistant Director for Engineering, or his or her duly authorized assistants, which includes Engineering managers & staff, Consulting Engineers and/or Inspectors.

"Equipment"

The machinery, accessories, appurtenances and manufactured articles to be furnished and/or installed under the Project.

"Flooding"

The term "flooding" shall mean any natural or human caused event that endangers the safety of the public through water entering a structure inhabited by the public.

"High Use Site"

DRAFT

Sites that typically generate high concentrations of oil due to high traffic turnover or the frequent transfer of oil. High-use sites include:

A. An area of a commercial or industrial site subject to an expected average daily traffic (ADT) count equal to or greater than one hundred vehicles per one thousand square feet of gross building area;

B. An area of a commercial or industrial site subject to petroleum storage and transfer in excess of one thousand five hundred gallons per year, not including routinely delivered heating oil;

C. An area of a commercial or industrial site subject to parking, storage or maintenance of twenty-five or more vehicles that are over ten tons gross weight (trucks, buses, trains, heavy equipment, etc.);

D. A road intersection with a measured ADT count of twenty-five thousand vehicles or more on the main roadway and fifteen thousand vehicles or more on any intersecting roadway, excluding projects proposing primarily pedestrian or bicycle use improvements.

"Infiltration BMP"

A stormwater or LID BMP that infiltrates (or percolates) stormwater runoff into the ground to dispose of surface and stormwater runoff. Some infiltration BMPs, such as those that utilize underdrains, may partially infiltrate stormwater runoff, discharging non-infiltrated stormwater runoff to the downstream conveyance or receiving water body.

"LID Manual"

Low Impact Development Technical Guidance Manual for Puget Sound, published by Puget Sound Partnership and Washington State University Pierce County Extension, December, 2012 or current.

"Material or Materials"

These words shall be construed to embrace machinery, manufactured articles, materials of construction (fabricated or otherwise) and any other classes of material to be furnished in connection with the Project.

"MS4"

Municipal Separate Storm Sewer System, as defined in the NPDES Permit.

"Natural Drainage Practice"

This term has been discontinued, and is now replaced by the term Low Impact Development (LID); refer to the definition above for LID.

"New hard surface"

A new non-vegetated surface area that either prevents or retards the entry of water into the soil mantle as under natural conditions prior to development. Conversion of any pervious vegetated area to a hard surface is a new hard surface. A new non-vegetated surface area which causes water to run off the surface in greater quantities or at an increased rate of flow from the flow present under natural conditions prior to development. Common hard surfaces include, but are not limited to, new roof tops, walkways, patios, driveways, parking lots or storage areas, concrete or asphalt paving, gravel roads, packed earthen materials, and oiled, macadam or other surfaces which

DRAFT

similarly impede the natural infiltration of stormwater. Open, uncovered retention/detention facilities shall not be considered as hard surfaces for purposes of determining whether the thresholds for application of minimum requirements are exceeded. Open, uncovered retention/detention facilities shall be considered hard surfaces for purposes of runoff modeling.

"Or Equal"

Any manufactured article, material, method, or work which, in the opinion of the City, is equally desirable or suitable for the purposes intended in these standards, as compared with similar articles specifically mentioned herein.

"Outfall"

A point source as defined by 40 CFR 122.2 at the point where a discharge leaves the permittee's MS4 and enters a surface receiving waterbody or surface receiving waters. Outfall does not include pipes, tunnels, or other conveyances which connect segments of the same stream or other surface waters and are used to convey primarily surface waters (i.e., culverts).

"On-site Stormwater Management BMPs"

As used herein, a synonym for Low Impact Development BMPs.

"Plans"

All approved drawings or reproductions of approved drawings made or to be made pertaining to the work provided for in the permit or Developer Extension Agreement.

"Professional Engineer"

A person who, by reason of his or her special knowledge of the mathematical and physical sciences and the principles and methods of engineering analysis and design, acquired by professional education and practical experience, is qualified to practice engineering as attested by his or her legal registration as a professional engineer in the state of Washington.

"Project"

The structure, facility, system or improvement to be constructed in whole or in part.

"Reference Specifications"

Reference specifications shall mean the technical specifications of other agencies incorporated or referred to herein.

"Reverse Slope Sidewalk with a Permeable Base Course"

An impermeable surface for the sidewalk with a permeable inlet on the downslope side of the sidewalk that directly infiltrates into a permeable base course under the sidewalk.

"Slope"

Degree of deviation of a surface from a horizontal; measured as a numerical ratio, percent or degrees. Expressed as a ratio, the first number is the horizontal distance (run) and the second is the vertical distance (rise), as 2:1. A 2:1 slope is a 50 percent slope. Expressed in degrees the slope is the angle from the horizontal plane, with a 90 degree slope being vertical and 45 degrees being 1:1 or 100 percent. Slopes of 20 percent of more shall be determined by those that have a rise of at least 5 feet and exceed 1,000 square feet in area.

DRAFT

“Standards”

City of Bellevue Utilities Department Surface Water Engineering Standards.

"Standard Details"

City of Bellevue Utilities Department standard detail drawings.

"Standard Plans"

Latest edition of the "Standard Plans for Road and Bridge Construction," Washington State Department of Transportation and the American Public Works Association, including all amendments.

"Standard Specifications"

Latest edition of the “Standard Specifications for Road, Bridge and Municipal Construction”, English edition, Washington State Department of Transportation (DOT) and the American Public Works Association (APWA) including all amendments.

DRAFT

"Threshold Discharge Area"

An on-site area draining to a single natural discharge location, or to multiple natural discharge locations that combine within one-quarter mile downstream, as determined by the shortest flowpath. The below figure illustrates this definition.

The City's Land Use Code includes thresholds for permeable pavement for Land Use Code purposes. Those thresholds may be different for Storm & Surface Water Utility Code purposes. Use guidance herein for all Storm & Surface Water Utility Code purposes.

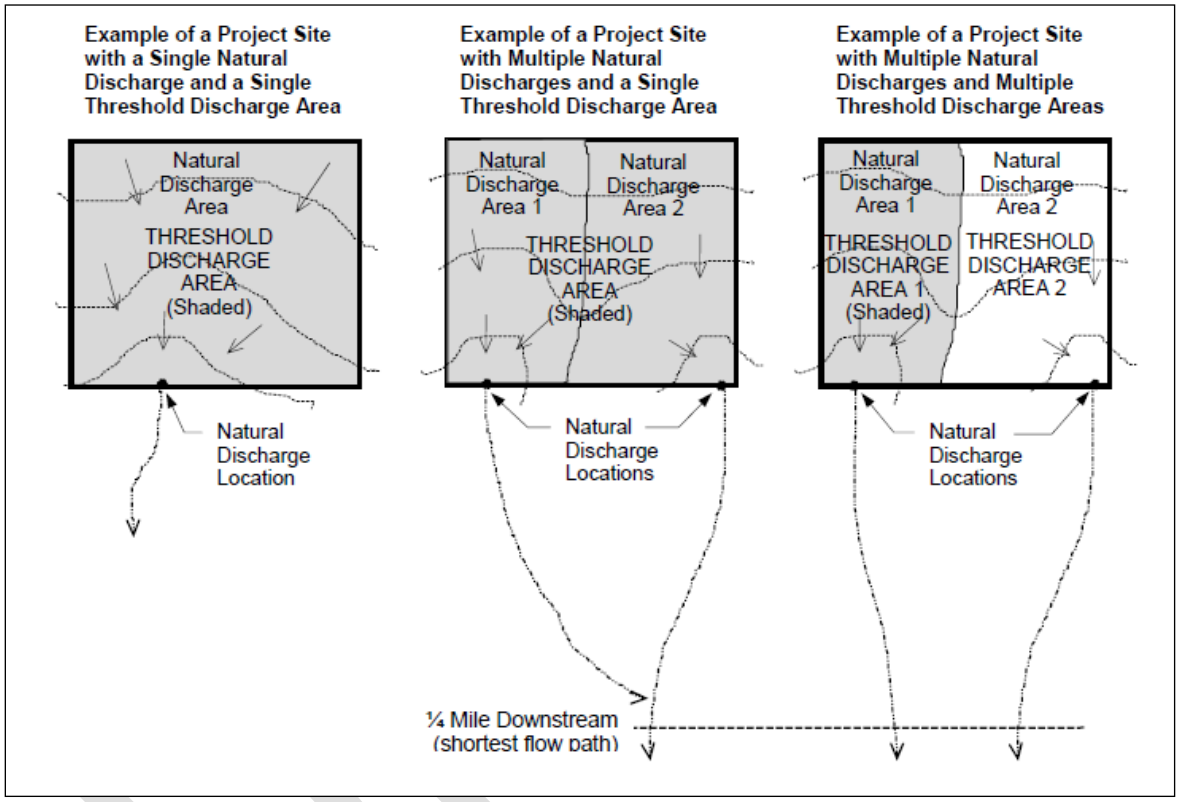

"Vehicular Use"

Regular use of an impervious or pervious surface by motor vehicles. The following are subject to regular vehicular use: roads, un-vegetated road shoulders, bike lanes within the traveled lane of a roadway, driveways, parking lots, unrestricted access fire lanes, vehicular equipment storage yards, and airport runways.

The following are not considered subject to regular vehicular use: paved bicycle pathways separated from and not subject to drainage from roads for motor vehicles, restricted access fire lanes, and infrequently used maintenance access roads.

"Words and Phrases"

Whenever the words, "as directed", "as required", "as permitted", or words of like effect are used, it shall be understood that the direction, requirement or permission of the City is intended. The words, "sufficient", "necessary", "proper", and the like shall mean sufficient, necessary or proper

in the judgment of the City. The words, "approved", "acceptable", "satisfactory", or words of like import shall mean approved by or acceptable to the City.

"Work"

The work necessary to manufacture and deliver machinery, equipment and material and/or the furnishing of all labor, tools, material, equipment, construction equipment, working drawings, where required, and other, necessities for the construction or erection of the structures shown and called for in the plans, specifications and permit/Developer Extension Agreement, and the act of constructing or erecting said structures complete.

A-Dl-02 REFERENCES

ACI 522.1, Specifications for Pervious Concrete Pavement. Published by the American Concrete Institute, Farmington Hills, Michigan.

Dam Safety Guidelines, Dam Safety Division, Washington State Department of Ecology, current edition.

Design of Small Dams, Bureau of Reclamation, United States Department of the Interior, third edition 1987.

Flood Insurance Study – King County, Washington and Incorporated Areas, National Flood Insurance Program, Federal Emergency Management Agency (FEMA), current edition.

Guidelines and Resources for Implementing Soil Quality and Depth BMP T5.13 in WDOE Stormwater Management Manual for Western Washington. Multiple authors, 2016 or current. http://soilsforsalmon.org

Guidelines for Bank Stabilizations Projects, King County publication.

Hydraulic Code Rules, Chapter 220 - 110, Washington Administrative Code.

Integrated Streambank Protection Guidelines, Washington Department of Fish and Wildlife and Washington Department of Transportation, April 2003.

Land Use Code (LUC), Bellevue City Codes, current edition.

Low Impact Development Technical Guidance Manual for Puget Sound, Puget Sound Partnership (PSP) and Washington State University Peirce County Extension (WSUPCE), December 2012 or current edition.

Online Geodatabase, GeomapNW, The Pacific Northwest Center for Geologic Mapping Studies, http://geomapnw.ess.washington.edu.

Rain Garden Handbook for Western Washington Homeowners, Washington State University, Pierce County Extension, June 2013. https://fortress.wa.gov/ecy/publications/documents/1310027.pdf.

Soil Survey - King County Area, Washington, Natural Resources Conservation Service (formerly Soil Conservation Service), U. S. Department of Agriculture.

Stormwater Management Manual for Western Washington, Washington State Department of Ecology. December, 2014.

Surface Water Design Manual, King County, Washington, April 24, 2016.

DRAFT

A-Dl-03 ABBREVIATIONS

Wherever references are made to the standards, specifications, or other published data of the various national, regional, or local organizations, such organizations may be referred to by their acronym or abbreviation only. As a guide to the user, the following acronyms or abbreviations which may appear shall have the meanings indicated herein:

AASHTO	American Association of the State Highway and Transportation Officials
ACI	American Concrete Institute
ANSI	American National Standards Institute, Inc.
APWA	American Public Works Association
ASTM	American Society for Testing and Materials
AWWA	American Water Works Association
DNRP	King County Department of Natural Resources
DOE	Washington State Department of Ecology
DOH	Washington State Department of Health
DOT	Washington State Department of Transportation
FHWA	Federal Highway Administration
Health	Public Health -- Seattle and King County
LID	Low Impact Development
MS4	Municipal Separated Storm Sewer System
NPDES	National Pollutant Discharge Elimination System
NRCS	Natural Resource Conservation Service (formerly Soil Conservation Service)
RCW	Revised Code of Washington
USEPA	United States Environmental Protection Agency
UE	Utility Extension Permit
WAC	Washington Administrative Code
WDWF	Washington Department of Fish & Wildlife
WSDOT	Washington State Department of Transportation

DRAFT

BELLEVUE SURFACE WATER ENG
Site Assessment and Planning Packet

Instructions for completing this packet:

- This packet is to be completed during preliminary site assessment and planning, and preliminary land use planning application
- See Appendix D1 for definitions of terms used in this packet
- See Chapter D2 for submittal requirements

The Goals of this packet are to:

- Provide basic project information
- Document how the project proposes to minimize:
  - Impervious surfaces
  - Loss of native vegetation
  - Stormwater runoff
- Demonstrate how the project proposes to comply with Minimum Requirement #5 –On-site Stormwater Management

A. APPLICANT INFORMATION

Company/Agency/Owner:_____
Contact Person:_____
Address:_____
_____
Phone:_____
Email:_____
Signature:_____
Date:_____

B. PROJECT INFORMATION

Permit No. (provided by City):_____
Project Address or Project Boundaries:_____
_____
Parcel No.:_____
Project Type:
☐ Residential ☐ Commercial ☐ Industrial ☐ Public
Project is:
☐ New or redevelopment ☐ Remodel ☐ Retrofit
☐ Combination (describe:)_____
_____

msi2043A-0916

C. CREATE SITE COMPOSITE MAP

Develop a composite site map as you collect site information in Section D.
See example in figure 1.2 chapter D1 of the Engineering Standards. This map must be submitted as part of the completed packet, and will be used as a basis for the site design.

D. EXISTING SITE INVENTORY AND ANALYSIS CHECKLIST

Use this portion of the packet to document the site inventory and analysis. For additional information on each portion of the analysis, refer to, Chapter D1 of the Engineering Standards.

1. PROJECT BOUNDARIES AND STRUCTURES

Identify/Delineate on map:

- ☐ Project boundaries (limits of disturbance)
- ☐ Existing and proposed buildings
- ☐ Required infiltration and dispersion setbacks (please describe)_____

_____

- ☐ Location and extent of proposed foundations and footing drains

2. SOILS

- ☐ Characterize existing soil type(s): _____
- ☐ What is the depth to seasonal high groundwater (feet)? _____
- ☐ Is bedrock present? ☐ Yes ☐ No If yes, depth (feet): _____
- ☐ What is the long-term design native soil infiltration rate (inch/hour): _____
- ☐ Identify source(s) of information used: _____

3. CRITICAL AREAS

See the Critical Areas Regulations on the city website
http://www.codepublishing.com/WA/Bellevue/LUC/BellevueLUC2025H.html

Identify and map any Critical Areas located on the project site and within the project vicinity

- ☐ Streams: _____
- ☐ Wetlands: _____
- ☐ Floodplains: _____
- ☐ Riparian areas: _____
- ☐ Critical aquifer recharge areas: _____
- ☐ Geologically hazardous areas: _____
- ☐ Other: _____

4. DEWATERING

- ☐ Provide estimated groundwater dewatering flow rates during construction: _____
- ☐ Provide estimated post construction groundwater dewatering flow rate: _____

5. TOPOGRAPHY

- ☐ Describe site topography and slopes: _____

Identify/Delineate on map:

- ☐ Areas of flat (≤5%), moderate (5% -15%), and steep (≥15%) slopes
- ☐ Closed depressions

6. HYDROLOGIC PATTERNS & FEATURES

Identify/Delineate on map:

- ☐ Sub-basin(s)
- ☐ Existing drainage swales and ditches (please describe) _____
- ☐ Location(s) of any natural seeps or springs (please describe) _____
- ☐ Existing discharge location(s) from each sub-basin and overall project site: (please describe) _____

_____

- ☐ Signs of existing erosion (please describe) _____
- ☐ Other: _____

7. VEGETATION

- ☐ Native vegetation type(s): _____
- ☐ Approximate tree canopy coverage (acres)[a]: _____
- ☐ Number of trees (greater than 8-inch diameter)[b]: _____
- ☐ Identify source(s) of information used: _____

Notes:

a Tree canopy area may be estimated from current aerial photographs and/or documented field observations. Mark on composite map and provide copy of source information

b Number of significant trees with a diameter equal to or greater than 8 inches are to be surveyed per the City of Bellevue Boundary & Topographic Survey submittal requirements.

8. LAND USE CONTROLS

- ☐ What is the project site zoning? _____
- ☐ Describe landscaping requirements: _____
- ☐ Describe parking requirements: _____
- ☐ Describe any applicable comprehensive plan designation, zoning classification, and/or overlay districts that may apply to the site: _____
- ☐ Does a Shoreline Master Program apply to the site? Yes No

If yes, describe: _____

- ☐ Other: _____

9. ACCESS

Identify/Delineate on map:

☐ Roads, driveways, and other points of ingress and egress within 50 feet of the project site

☐ Identify the street classification of the street that will provide access to the site, per the City of Bellevue Transportation Design Manual:_____

☐ Identify frontage improvement requirements: _____

☐ Identify and describe any other geometric design requirements that could impact the amount of impervious surface coverage on the site and the location of the access road/driveway:_____

_____

10. UTILITY AVAILABILITY AND CONFLICTS

Identify/Delineate on map:

☐ Existing utilities and easements present on and adjacent to the project site, including utility owner. Also note any utility or easement setback requirements that affect site planning:_____

_____

☐ Existing utilities that may need to be moved and new utilities that may need to be extended to the site:_____

_____

E. EXISTING AND PROPOSED SITE LAND COVER AREAS

Fill in the table below to summarize existing and proposed site land cover areas. The completed table will be used to assess the proposed plans for minimizing impervious areas, loss of vegetation, and stormwater runoff.

	Existing Condition	Proposed Condition
Vegetated Areas		
Tree canopy in acres (Copy values from Part D7)		
Number of trees (Copy values from Part D7)		
Landscape area (acres)		
Total project site vegetated area (acres)		
Total project site vegetated area (%)		
Hard Surface Areas		
Hard surface (acres)		
Total project site impervious area (%)		
Change		
Increase/decrease in vegetated areas (acres)		
Increase/decrease in vegetated areas (%)		
Increase/decrease in hard surface areas (acres)		
Increase/decrease in hard surface areas (%)		

F. POTENTIAL LID BMP MATRIX

For each LID BMP being evaluated, use the infeasibility criteria in Appendix D9 to determine whether the LID BMP is infeasible for your project. Document the result of that evaluation here.

	Feasibility/Infeasibility Evaluation			
	Feasible	Infeasible	Not Applicable	If infeasible, provide justification
Post-Construction Soil Quality and Depth				
Full Dispersion				
Bioretention				
Downspout Dispersion				
Perforated Stubout Connection				
Retain Existing Trees				
Permeable Pavement				
Sheet Flow Dispersion				
Concentrated Flow Dispersion				
Vegetated Roofs				
Minimal Excavation Foundations				
Rain Water Harvesting				
New Trees				

APPENDIX D-3

SAMPLE TITLE BLOCK

Also available in AutoCAD format at:

http://www.bellevuewa.gov/utilities_maps_forms.htm

DRAFT

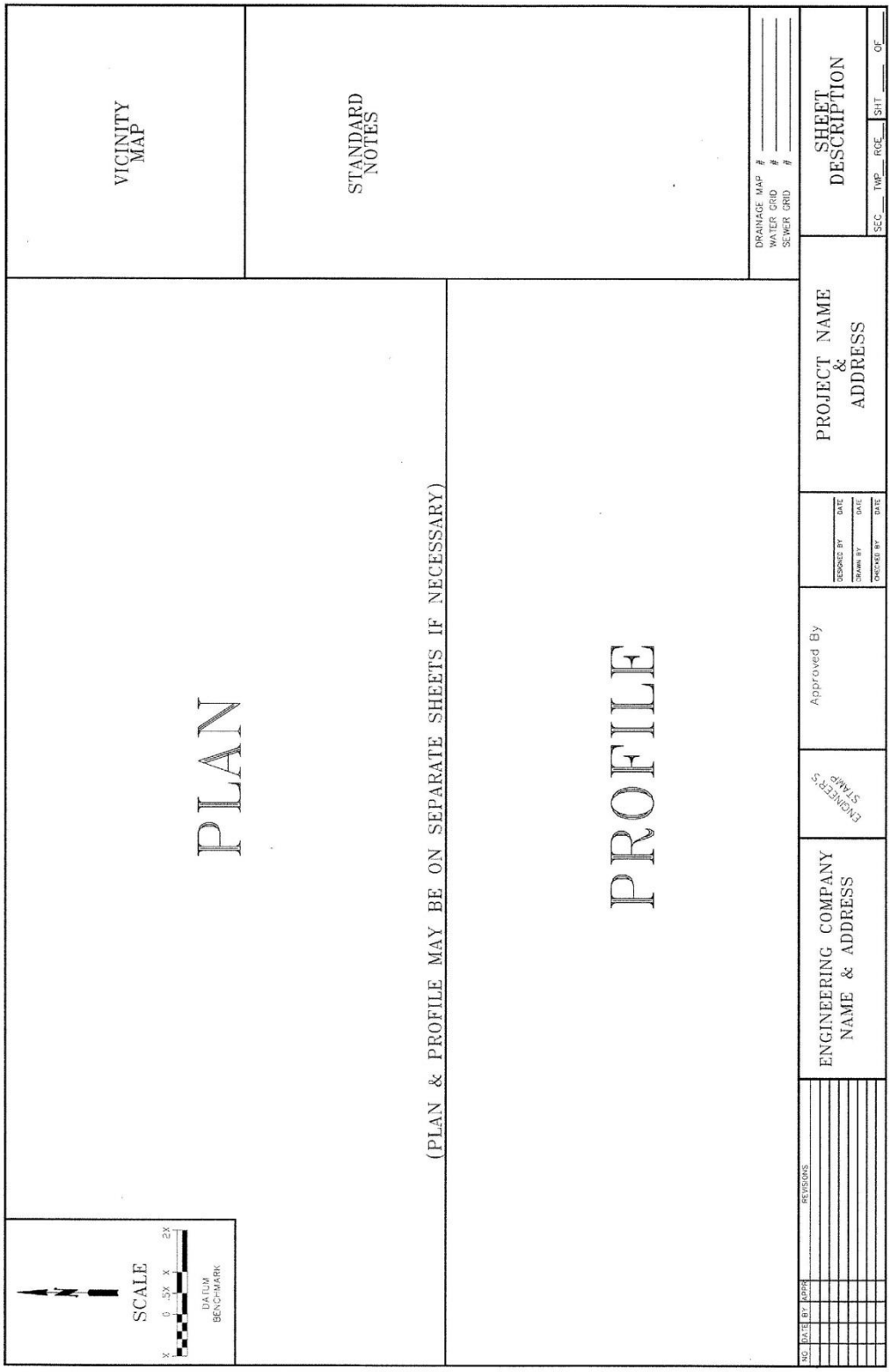
VICINITY MAP
STANDARD NOTES
DRAINAGE MAP #
WATER GRID #
SEWER GRID #
SHEET DESCRIPTION
SEC TWP RGE SHT OF
PLAN
(PLAN & PROFILE MAY BE ON SEPARATE SHEETS IF NECESSARY)
PROFILE
PROJECT NAME & ADDRESS
DESIGNED BY DATE
DRAWN BY DATE
CHECKED BY DATE
Approved By
ENGINEER'S STAMP
ENGINEERING COMPANY NAME & ADDRESS
SCALE
X 0 .5X X 2X
DATUM BENCH-MARK
NO. DATE BY APPR REVISIONS

APPENDIX D-4 STANDARD NOTES

The following is a listing of standard notes that shall be incorporated in the drainage plan set. All the notes on the list may not pertain to every project. The Developer may omit non-relevant notes as determined by the Utility. However, do not renumber the remaining notes. If additional notes are needed for specific aspects, they should be added after the standard notes.

General Notes:

1) All work shall conform to the 2017 edition of the City of Bellevue Utilities Department Engineering Standards.
2) The Contractor shall use a vacuum street sweeper to remove dust and debris from pavement areas as directed by the Professional Engineer. Flushing of streets shall not be permitted without prior City approval.
3) When work is to occur in easements, the Contractor shall notify the easement grantor and Bellevue Utilities in writing a minimum of 48 hours in advance of beginning work (not including weekends or holidays). Failure to notify grantor and Bellevue Utilities will result in a Stop Work Order being posted until the matter is resolved to the satisfaction of Bellevue Utilities. A written release from the easement grantor shall be furnished to the Utilities Inspector prior to permit sign-off.
4) Install flow diversion measures outside of the Critical Root Zone of trees to be protected. At no time shall construction stormwater be directed towards trees to be protected. Construction stormwater shall not pond within a tree's critical root zone.
5) All trenches shall be compacted, and Hot Mix Asphalt in place in paved areas, prior to testing storm lines for acceptance.

Storm Drainage Notes:

1) Storm pipe shall be PVC conforming to ASTM D-3034 SDR 35 (4" – 15") or ASTM F-679 (18"-27"). Bedding and backfill shall be as shown in the Standard Details.
2) The footing drainage system and the roof downspout system shall not be interconnected and shall separately convey collected flows to the conveyance system or to on-site stormwater facilities.
3) Prior to final inspection and acceptance of storm drainage work, pipes and storm drain structures shall be cleaned and flushed. Any obstructions to flow within the storm drain system, (such as rubble, mortar and wedged debris), shall be removed at the nearest structure. Wash water of any sort shall not be discharged to the storm drain system or surface waters.
4) Ends of each storm drain stub at the property line shall be capped and located with an 8' long 2" x 4" board, embedded to the stub cap and extending at least 3 feet above grade, and marked permanently "STORM". A copper 12 ga. locate wire firmly attached. The stub depth shall be indicated on the marker.

DRAFT

5) All grates in roadways shall be ductile iron, bolt-locking, vaned grates per the Standard Details. Structures in traffic lanes outside of the curbline which do not collect runoff shall be fitted with round, bolt-locking solid covers. Off-street structures which do not collect runoff shall be fitted with bolt-locking solid covers.
6) Vegetation/landscaping in the detention pond, bioretention facility, vegetated roof and/or drainage swale(s) are an integral part of the runoff treatment system for the project. Such drainage facilities will not be accepted until plantings are established.
7) All new manholes shall have a minimum inside diameter of 48" and shall conform to the Standard Details. All new catch basins shall conform to the Standard Details.
8) Side storm stations are referenced from nearest downstream manhole/ catch basin.
9) All testing and connections to existing mains shall be done in the presence of a representative of the City of Bellevue Utilities Department.
10) All public storm drains shall be air tested and have a video inspection performed prior to acceptance (see #23 below). Storm main constructed with flexible pipe shall be deflection tested with a mandrel prior to acceptance.
11) Storm stubs shall be tested for acceptance at the same time the main storm is tested.
12) All manholes/ catch basins in unpaved areas shall include a concrete seal around adjustment rings per Standard Details.
13) All storm main extensions within the public right-of-way or in easements must be "staked" by a surveyor licensed in Washington State for "line and grade" and cut sheets provided to the Professional Engineer, prior to starting construction.
14) Storm drainage mainlines, stubs and fittings shall be constructed using the same pipe material and manufacturer. Connections between stubs and the mainline will be made with a tee fitting. Tee fitting shall be from same manufacturer as pipe. Cut-in connections are only allowed when connecting a new stub to an existing mainline.
15) Manholes, catch basins and vaults are considered to be permit-required confined spaces. Entry into these spaces shall be in accordance with Chapter 296-809 WAC.
16) Placement of surface appurtenances (MH lids, valve lids, etc.) in tire tracks of traffic lanes shall be avoided whenever possible.
17) The Contractor shall perform a video inspection and provide a DVD of the storm pipe interior for the City's review. The video shall provide a minimum of 14 lines per millimeter resolution and cover the entire length of the applicable pipe. The camera shall be moved through the pipe at a uniform rate (≤ 30 ft/min), stopping when necessary to ensure proper documentation of the pipe condition. The video shall be taken after installation and cleaning to insure that no defects exist. The project will not be accepted until all defects have been repaired.
18) Clearly label public and private systems on the plans. Private systems shall be marked "private" and shall be maintained by the property owner(s).
19) All concrete structures (vaults, catch basins, manholes, oil/water separators, etc.) shall be vacuum tested.

DRAFT

20) Manholes, catch basins and inlets in easements shall be constructed to provide a stable, level grade for a minimum radius of 2.5 feet around the center of the access opening to accommodate confined space entry equipment.
21) Tops of manholes/ catch basins within public right-of-way shall not be adjusted to final grade until after paving.
22) Contractor shall adjust all manhole/ catch basin rims to flush with final finished grades, unless otherwise shown.
23) Contractor shall install, at all connections to existing downstream manholes/catch basins, screens or plugs to prevent foreign materials from entering existing storm drainage system. Screens or plugs shall remain in place throughout the duration of the construction and shall be removed along with collected debris at the time of final inspection and in the presence of a representative of the City of Bellevue Utilities Department.
24) Before commencement of trenching, the Contractor shall provide filter fabric for all downhill storm drain inlets and catch basins, which will receive runoff from the project site. The contractor shall periodically inspect the condition of all filter fabric and replace as necessary.
25) Minimum cover over storm drainage pipe shall be 2 feet, unless otherwise shown.
26) Redirect sheet flow, block drain inlets and/or curb openings in pavement and install flow diversion measures to prevent construction silt laden runoff and debris from entering excavations and finish surfaces for bioretention facilities and permeable pavements.
27) Where amended soils, bioretention facilities, and permeable pavements are installed, these areas shall be protected at all times from being over-compacted. If areas become compacted, remediate and till soil in accordance with the City's Project Representative's requirements at no additional cost in order to restore the system's ability to infiltrate.

Utility Notes:

1) The locations of all existing utilities shown hereon have been established by field survey or obtained from available records and should therefore be considered approximate only and not necessarily complete. It is the sole responsibility of the excavator to independently verify the accuracy of all utility locations shown, and to further discover and avoid any other utilities not shown here on which may be affected by the implementation of this plan. Immediately notify the responsible Professional Engineer if a conflict exists.
2) Call 1-800-424-5555, or 8-1-1, 72 hours before construction for utility locates.
3) The Contractor shall maintain a minimum of five feet (5') horizontal separation between all water and storm drainage lines. Any conflict shall be reported to the Utility and the Professional Engineer prior to construction.
4) Avoid crossing water or sewer mains at highly acute angles. The smallest angle measure between utilities should be 45 degrees.
5) It shall be the Contractor's responsibility to ensure that no conflicts exist between storm drainage lines and proposed or existing utilities prior to construction.

DRAFT

6) At points where existing thrust blocking is found, minimum clearance between concrete blocking and other buried utilities or structures shall be 5 feet.
7) Where a new utility line crosses below an existing AC main, the AC pipe shall be replaced with DI pipe to 3 feet past each side of the trench as shown on Standard Detail W-8. Alternatively, where directed by the Utility, the trench shall be backfilled with controlled density fill (CDF, aka flowable fill) from bottom of trench to bottom of AC main.

Erosion Control Notes:

1) Provide and maintain temporary sedimentation collection facilities to ensure that sediment or other hazardous materials do not enter the storm drainage system in accordance with the sites approved CSWPPP.
2) For all construction during the rainy season, downhill basins and inlets must be protected with catch basin inserts. Simply placing filter fabric under the grate is not acceptable.

Restoration Notes:

1) Surface restoration of existing asphalt pavement shall be as required by the right-of-way use permit.
2) The Contractor shall restore the Right-of-Way and existing public storm drainage easement(s) after construction to a condition equal or better than condition prior to entry. The Contractor shall furnish a signed release from all affected property owners after restoration has been completed.

DRAFT

APPENDIX D-5

DRAFTING STANDARDS

Also available in AutoCAD format at:

http://www.bellevuewa.gov/utilities_maps_forms.htm

WATER SYMBOLS ..... PAGE 1

SANITARY/STORM SEWER SYMBOLS ..... PAGE 2

SURVEY SYMBOLS ..... PAGE 3

SURFACE FEATURES/LANDSCAPE SYMBOLS ..... PAGE 4

SIGNALIZATION SYMBOLS ..... PAGE 5

CHANNELIZATION SYMBOLS ..... PAGE 7

GAS/POWER/TELEPHONE SYMBOLS ..... PAGE 8

SURFACE FEATURES LINE TYPES ..... PAGE 9

SURVEY LINE TYPES ..... PAGE 10

UTILITIES LINE TYPES ..... PAGE 11

TEXT STYLES ..... PAGE 12

NOTES ..... PAGE 12

DRAFT

WATER SYMBOLS

SYMBOL EXIST.	SYMBOL PROP.	DESCRIPTION	BLOCK	LAYER
		ADAPTER, FL. x M.J.	WAFM/SAME	WA–FITT–3333–SYM
		BENDS:		
		90 DEGREE BEND, FL.	W90F/SAME	WA–FITT–3333–SYM
		45 DEGREE BEND, FL.	W45F/SAME	WA–FITT–3333–SYM
		22.5 DEGREE BEND, FL.	W22F/SAME	WA–FITT–3333–SYM
		11.25 DEGREE BEND, FL.	W11F/SAME	WA–FITT–3333–SYM
		90 DEGREE BEND, M.J.	W90M/SAME	WA–FITT–3333–SYM
		45 DEGREE BEND, M.J.	W45M/SAME	WA–FITT–3333–SYM
		22.5 DEGREE BEND, M.J.	W22M/SAME	WA–FITT–3333–SYM
		11.25 DEGREE BEND, M.J.	W11M/SAME	WA–FITT–3333–SYM
		VERTICAL BEND, FL.	WVTF/SAME	WA–FITT–3333–SYM
		VERTICAL BEND, M.J.	WVTM/SAME	WA–FITT–3333–SYM
		REDUCERS:		
		REDUCER, FL.	WRF/WRFP	WA–FITT–3333–SYM
		REDUCER, M.J.	WRM/WRMP	WA–FITT–3333–SYM
		REDUCER, M.J. x FL.	WRMF/WRMFP	WA–FITT–3333–SYM
		REDUCER, M.J. x P.E.	WRMB/WRMBP	WA–FITT–3333–SYM
		REDUCER, P.E. x M.J./FL. x M.J.	WRBM/WRBMP	WA–FITT–3333–SYM
		TEES:		
		TAPPING TEE & VALVE, FL. x M.J.	WTTM/WTTMP	WA–VALV–3333–SYM
		TEE, FL.	WTF/SAME	WA–FITT–3333–SYM
		TEE, M.J.	WTM/SAME	WA–FITT–3333–SYM
		TEE, M.J. x FL.	WTMF/SAME	WA–FITT–3333–SYM
		VALVES:		
		BUTTERFLY VALVE, FL.	WBFV/WBFVP	WA–VALV–3333–SYM
		BUTTERFLY VALVE, FL. x M.J.	WBVFM/WBVFMP	WA–VALV–3333–SYM
		BUTTERFLY VALVE, M.J.	WBVM/WBVMP	WA–VALV–3333–SYM
		GATE VALVE, FL.	WGV/WGVP	WA–VALV–3333–SYM
			SAME – INDICATES USE SAME BLOCK FOR PROPOSED.	3333–USE EXST/PRO

American Public Works Association Washington State Chapter

City of Bellevue

WATER SYMBOLS

SYMBOL EXIST.	SYMBOL PROP.	DESCRIPTION	(ABBR)	BLOCK	LAYER
		GATE VALVE, FL. x M.J.		WGVFM/WGVFMP	WA–VALV–3333–SYM
		GATE VALVE, M.J.		WGVM/WGVMP	WA–VALV–3333–SYM
		AIR RELIEF VALVE	(AIR)	WARV/WARVP	WA–VALV–3333–SYM
		BLOW–OFF VALVE	(BO)	WBOV/WBOVP	WA–VALV–3333–SYM
		CHECK VALVE	(CK)	WCKV/WCKVP	WA–VALV–3333–SYM
		PLUG VALVE	(PV)	WPV/WPVP	WA–VALV–3333–SYM
		CAP/PLUG		WCAP	WA–FITT–3333–SYM
		COUPLING	(CPL)	WCOUP/WCOUPP	WA–FITT–3333–SYM
		GUARD POST	(GP)	WGP/WGPP	WA–FITT–3333–SYM
		REDUCER	(RED)	WRED/WREDP	WA–FITT–3333–SYM
		THRUST BLOCK	(TB)	WTB/WTBP	WA–FITT–3333–SYM
		WATER METER	(WM)	WMET/WMETP	WA–METR–3333–SYM
		FIRE HYDRANTS:			
		2–PORT	(FH)	WFH2/WFH2P	WA–FHYD–3333–SYM
		3–PORT	(FH)	WFH3/WFH3P	WA–FHYD–3333–SYM
		JOINTS:			
		FLANGE/BLIND FL	(FL)/(BL FL)	WFL	WA–FITT–3333–SYM
		MECHANICAL	(MJ)	WMJ	WA–FITT–3333–SYM
		PUSH–ON/HUB		WHUB	WA–FITT–3333–SYM
		THREAD	(THD)	WTH	WA–FITT–3333–SYM

3333 – USE EXST/PROP

SANITARY/STORM SEWER SYMBOLS

SYMBOL EXIST.	SYMBOL PROP.	DESCRIPTION	(ABBR)	BLOCK	LAYER
		SAN. SEWER CLEAN OUT	(CO)	SSCO/SSCOP	SS–STCR–3333–SYM
		SAN. SEWER MANHOLE	(SSMH)	SSMH/SSMHP	SS–STCR–3333–SYM
		STORM DRAIN CATCH BASIN	(CB)	SDCB/SDCBP	SD–STCR–3333–SYM
		STORM DRAIN CULVERT	(CULV)	SDC/SDCP	SD–GLIN–3333–SYM
		STORM DRAIN MANHOLE	(SDMH)	SDMH/SDMHP	SD–STCR–3333–S

3333 – USE EXST/PR

American Public Works Association Washington State Chapter

City of Bellevue

SURVEY SYMBOLS

SYMBOL THEOR./ EXIST.	SYMBOL FOUND/ PROP.	DESCRIPTION	(ABBR)	BLOCK	LAYER
△	△	ANGLE POINT	(AP)	SAP/SAPP	SV–CTRL–3333–SYM
⌖	⌖	BENCH MARK	(BM)	SBM/SBMP	SV–CTRL–3333–SYM
○	●	BLOCK CORNER	(BC)	SBC/SBCP	SV–CTRL–3333–SYM
∘	•	IRON PIPE	(IP)	SIP/SIPP	SV–CTRL–3333–SYM
⊕	◐	MONUMENT (IN CASE)	(MIC)	SMIC/SMICP	SV–CTRL–3333–SYM
⊛	⊛	MONUMENT (SURFACE)	(MON)	SMON/SMONP	SV–CTRL–3333–SYM
		OWNERSHIP TIE	(OT)	SOT	SV–LOTN–3333–SYM
		SECTION DATA:			
○		SECTION CENTER		SSCT	SV–SECT–3333–SYM
✚	✚	SECTION CORNER		SSC/SSCP	SV–SECT–3333–SYM
⊸○⊷	⊸○⊷	QUARTER CORNER		SQC/SQCP	SV–QSCT–3333–SYM
○	○	SIXTEENTH CORNER		SSXC/SSXCP	SV–16ST–3333–SYM
✚	✚	CLOSING CORNER		SCC/SCCP	SV–222A–3333–SYM
⊸ MC	⊸ MC	MEANDER CORNER	(MC)	SMC/SMCP	SV–222A–3333–SYM
∘ WC	• WC	WITNESS CORNER	(WC)	SWC/SWCP	SV–SECT–3333–SYM
⊘	⊗	SOIL BORING	(SB)	SSB/SSBP	SV–SOIL–3333–SYM
×	⊗	SPOT ELEVATION	(SE)	SSE/SSEP	SV–CTRL–3333–SYM
⬭		TAX LOT / PARCEL NUMBER		STLN	SV–222B–3333–SYM

222A – USE RANG/SECT/TWNS
222B – USE PRCL/LOTN
3333 – USE EXST/PROP OR FOUN/THEO

BLOCK: SNA
LAYER: SV–NORA–3333–SYM

BLOCK: SDAT
LAYER: SV–DATM–3333–SYM

American Public Works Association Washington State Chapter

City of Bellevue

SURFACE FEATURES/LANDSCAPING

SYMBOL EXIST.	SYMBOL PROP.	DESCRIPTION	BLOCK	LAYER
BUS	BUS	BUS STOP	SFBS/SFBSP	SF-BUSS-3333-SYM
		EMBANKMENT	SFB/SFBP	SF-EMBT-3333-SYM
		MAIL BOX	SFMB/SFMBP	SF-MAIL-3333-SYM
		RIP RAP	SFRR/SFRRP	SF-RIPR-3333-SYM
		ROCKERY	SFR/SFRP	SF-ROCK-3333-SYM
		SHRUB	SFS/SFSP	SF-VEGE-3333-SYM
		SIGN	SFSN/SFSNP	SF-SIGN-3333-SYM
		TREE (Conifer)	SFC/SFCP	SF-VEGE-3333-SYM
		TREE (Deciduous)	SFD/SFDP	SF-VEGE-3333-SYM
		YARD LIGHT	SFL/SFLP	SF-LITE-3333-SYM

3333 – USE EXST/PROP

American Public Works Association Washington State Chapter

City of Bellevue

SIGNALIZATION SYMBOLS

SYMBOL EXIST.	SYMBOL PROP.	DESCRIPTION	BLOCK	LAYER
		AERIAL DISCONNECT	TAD/TADP	TF-SIGL-3333-SYM
		AERIAL TERMINAL COMPARTMENT	TATC/TATCP	TF-SIGL-3333-SYM
		DETECTORS:		
		DIPOLE DETECTOR	TDD/TDDP	TF-SIGL-3333-SYM
		QUADRAPOLE DETECTOR	TQD/TQDP	TF-SIGL-3333-SYM
		PEDESTRIAN DETECTOR	TPD/TPDP	TF-SIGL-3333-SYM
		EMERGENCY VEHICLE INDICATOR LIGHTS:		
		INDICATOR LIGHTS	TIL/TILP	TF-SIGL-3333-SYM
		OPTICOM SENSOR	TOS/TOSP	TF-SIGL-3333-SYM
		OPTICOM SENSOR W/ INDICATOR LIGHTS	TOSL/TOSLP	TF-SIGL-3333-SYM
		FLASHING WARNING SYSTEM	TFWS/TFWSP	TF-SIGL-3333-SYM
		JUNCTION BOX (TYPE I, II, III)	TJB1/TJB1P TJB2/TJB2P TJB3/TJB3P	TF-SIGL-3333-SYM TF-SIGL-3333-SYM TF-SIGL-3333-SYM
		PEDESTRIAN PUSHBUTTON POST W/ PUSHBUTTON	TPB/TPBP	TF-SIGL-3333-SYM
		PEDESTRIAN SIGNAL HEAD	TPSH/TPSHP	TF-SIGL-3333-SYM
		POLE NOTE	TPN	TF-SIGL-3333-SYM
		R/R CROSSING GATE	TRG/TRGP	TF-SIGL-3333-SYM
		R/R CROSSING SIGNAL	TRC/TRCP	TF-SIGL-3333-SYM

3333-USE EXST/PRO

American Public Works Association Washington State Chapter

City of Bellevue

SIGNALIZATION SYMBOLS

SYMBOL EXIST.	SYMBOL PROP.	DESCRIPTION	BLOCK	LAYER
		SIGNAL CONTROLLER	TSC/TSCP	TF-SIGL-3333-SYM
		SIGNAL LOAD CENTER	TSLC/TSLCP	TF-SIGL-3333-SYM
		STREET LIGHT ASSEMBLY	TSLA/TSLAP	TF-SIGL-3333-SYM
		TRAFFIC SIGNS:		
		BRIDGE	TSB/TSBP	TF-SIGN-3333-SYM
		CANTILEVERED	TSCL/TSCLP	TF-SIGN-3333-SYM
		SINGLE POST	TSS/TSSP	TF-SIGN-3333-SYM
		DOUBLE POST	TSD/TSDP	TF-SIGN-3333-SYM
		TRAFFIC SIGNAL POLE	TPOL/TPOLP	TF-SIGL-3333-SYM
		TRAFFIC SIGNAL POLE W/ LUMINAIRE	TSPL/TSPLP	TF-SIGL-3333-SYM
		TRAFFIC SIGNAL SUPPORT POLE	TSPOL/TSPOLP	TF-SIGL-3333-SYM
		VEHICLE SIGNAL HEAD	TVH/TVHP	TF-SIGL-3333-SYM
		VEHICLE SIGNAL HEAD W/ARROW INDICATOR	TVHA/TVHAP	TF-SIGL-3333-SYM
		WIRE NOTE	TWN	TF-SIGL-3333-SYM

3333 – USE EXST/PROP

American Public Works Association Washington State Chapter

City of Bellevue

CHANNELIZATION SYMBOLS

SYMBOL EXIST.	SYMBOL PROP.	DESCRIPTION	BLOCK	LAYER
		BIKE PATH	CB/CBP	TF–CHAN–3333–SYM
		HANDICAP SYMBOL	CHS/CHSP	TF–CHAN–3333–SYM
		H.O.V. LANE SYMBOL	CHOV/CHOVP	TF–CHAN–3333–SYM
ONLY	ONLY	ONLY	CO/COP	TF–CHAN–3333–SYM
RXR	RXR	RAILROAD CROSSING	CRR/CRRP	TF–CHAN–3333–SYM
SCHOOL	SCHOOL	SCHOOL	CSC/CSCP	TF–CHAN–3333–SYM
STOP	STOP	STOP	CS/CSP	TF–CHAN–3333–SYM
		LANE CONTROL ARROWS: STRAIGHT ARROW	CSA/CSAP	TF–CHAN–3333–SYM
		LT.RT.STR.ARROW	CLRS/CLRSP	TF–CHAN–3333–SYM
		LEFT–RIGHT ARROW	CLR/CLRP	TF–CHAN–3333–SYM
		2–WAY LEFT TURN	C2W/C2WP	TF–CHAN–3333–SYM

3333 – USE EXST/PROP

American Public Works Association Washington State Chapter

City of Bellevue

CHANNELIZATION SYMBOLS

SYMBOL EXIST.	SYMBOL PROP.	DESCRIPTION	BLOCK	LAYER
		LEFT TURN ARROW	CLT/CLTP	TF–CHAN–3333–SYM
		RIGHT TURN ARROW	CRT/CRTP	TF–CHAN–3333–SYM
		LEFT–SRAIGHT ARROW	CLS/CLSP	TF–CHAN–3333–SYM
		RIGHT–STRAIGHT ARROW	CRS/CRSP	TF–CHAN–3333–SYM
		RAISED MARKERS:		
○	●	LANE MARKERS TYPE I	CLM1/CLM1P	TF–CHAN–3333–SYM
□	■	LANE MARKERS TYPE II	CLM2/CLM2P	TF–CHAN–3333–SYM
				3333 – USE EXST/PROP

GAS/POWER/TELEPHONE SYMBOLS

SYMBOL EXIST.	SYMBOL PROP.	DESCRIPTION	(ABBR)	BLOCK	LAYER
		GAS METER	(GM)	GMET/GMETP	GS–METR–3333–SYM
		GAS VALVE	(GV)	GV/GVP	GS–VALV–3333–SYM
△	▲	PAD MOUNTED TRANSFORMER	(P TRAN)	PTRAN/PTRANP	PO–STCR–3333–SYM
P	P	POWER VAULT	(POW V)	PV/PVP	PO–STCR–3333–SYM
⊠		TRANSMISSION TOWER	(TRANS TWR)	PTWR	PO–STCR–EXST–SYM
-o-	-●-	UTILITY POLE	(PP, TP)	UP/UPP	11–STCR–3333–SYM
←	←	UTILITY POLE ANCHOR		UPA/UPAP	11–STCR–3333–SYM
□	■	TELEPHONE RISER	(TEL R)	TELR/TELRP	TL–STCR–3333–SYM
T	T	TELEPHONE VAULT	(TEL V)	TV/TVP	TL–STCR–3333–SYM 11 – USE PO/TL 3333 – USE EXST/PROP

American Public Works Association Washington State Chapter

City of Bellevue

LINETYPES

LINETYPE	DESCRIPTION	COLOR	LT NAME	LAYER
	SURFACE FEATURES:			
0.2" 0.1"	BUILDING LINE (EXISTING) NO. 2.5 PEN	GREEN	EXBUILD	SF–BLDG–EXST–LIN
	BUILDING LINE (PROPOSED) NO. 2.5 PEN	GREEN	CONTINUOUS	SF–BLDG–PROP–LIN
1.5" 0.1" 0.1" 0.05"	CREEK/DITCH CENTERLINE (EXIST.) NO. 0 PEN	WHITE	DITCH	SF–DTCH–EXST–LIN
	CREEK/DITCH CENTERLINE (PROP.) NO. 2.5 PEN	GREEN	DITCH	SF–DTCH–PROP–LIN
	CURB/PAVEMENT/SIDEWALK (EX) NO. 0 PEN	WHITE	CONTINUOUS	SF–222A–EXST–LIN
	CURB/PAVEMENT/SIDEWALK (PROP) NO. 1 PEN	CYAN	CONTINUOUS	SF–222A–PROP–LIN
1.0" 0.075"	FENCE (EXISTING) NO. 000 PEN	YELLOW	FNC1	SF–FENC–EXST–LIN
	FENCE (PROPOSED) NO. 1 PEN	CYAN	FNC1	SF–FENC–PROP–LIN
1.0" 0.075"	GUARDRAIL (EXISTING) NO. 000 PEN	YELLOW	EGR1	SF–GURD–EXST–LIN
	GUARDRAIL (PROPOSED) NO. 1 PEN	CYAN	PGR1	SF–GURD–PROP–LIN
2.0" 0.1" 0.1"	LAKE/POND NO. 0 PEN	WHITE	LAKE	SF–LAKE–EXST–LIN
0.15" 0.15"	MARSH/SWAMP PERIMETER NO. 0 PEN	WHITE	MARSH	SF–SWMP–EXST–LIN
0.5" 0.1" 0.125"	RAILROAD NO. 0 PEN	WHITE	R1R1	SF–RLRD–EXST–LIN
0.075"	RETAINING WALL (EXISTING) NO. 0 PEN	WHITE	ERW1	SF–WALL–EXST–LIN
	RETAINING WALL (PROPOSED) NO. 1 PEN	CYAN	PRW1	SF–WALL–PROP–LIN
	RIVERBANK/SHORELINE NO. 1 PEN	CYAN	CONTINUOUS	SF–222B–EXST–LIN

222A – USE CURB/PVMT
222B – USE RIVR/SHOR

American Public Works Association Washington State Chapter

City of Bellevue

LINETYPES

LINETYPE	DESCRIPTION	COLOR	LT NAME	LAYER
	SURVEY:			
1.2" 0.05" 0.1"	CENTERLINE (EXISTING) NO. 000 PEN	YELLOW	EXCNTL	SV–CNTL–EXST–LIN
0.1"	CENTERLINE (PROPOSED) NO. 2.5 PEN	GREEN	PROCNTL	SV–CNTL–PROP–LIN
0.05"	CONTOUR (DEPRESSION) NO. 000 PEN	YELLOW	DEC1	SV–CONT–DEPR–LIN
0.5" * * * 0.1"	CONTOUR (EXISTING) NO. 000 PEN	YELLOW	CON	SV–CONT–EXST–LIN
* * *	CONTOUR (INDEX) NO. 1 PEN	CYAN	CON	SV–CONT–INDX–LIN
* * *	CONTOUR (PROPOSED) NO. 1 PEN	CYAN	CONTINUOUS	SV–CONT–PROP–LIN
0.1" 0.7" 0.04"	DONATION LAND CLAIM (EXIST.) NO. 1 PEN	CYAN	DLC	SV–DLCM–EXST–LIN
	DONATION LAND CLAIM (PROP.) NO. 2.5 PEN	GREEN	DLC	SV–DLCM–PROP–LIN
	EASEMENT (PERMANENT) NO. 1 PEN	CYAN	CONTINUOUS	SV–ESMT–PERM–LIN
0.4" 0.05"	EASEMENT (TEMPORARY) NO. 1 PEN	CYAN	TEMPESMT	SV–ESMT–TEMP–LIN
0.1" 0.05"	MEANDER LINE NO. 000 PEN	YELLOW	MEANDER	SV–MEAN–EXST–LIN
2.0" 0.075" 0.075"	PROPERTY LINE (EXISTING) NO. 000 PEN	YELLOW	PROPERT	SV–PROP–EXST–LIN
	PROPERTY LINE (PROPOSED) NO. 1 PEN	CYAN	PROPERT	SV–PROP–PROP
	RANGE/TOWNSHIP LINE NO. 2.5 PEN	GREEN	CONTINUOUS	SV–222A–EXST–LIN
0.5" 0.05" 0.1"	RESERVATION/PARK/FOREST (EX) NO. 1 PEN	CYAN	PARK	SV–PARK–EXST–LIN
	RESERVATION/PARK/FOREST (PRO) NO. 2.5 PEN	GREEN	PARK	SV–PARK–PROP–LIN
0.2" 0.05"	RIGHT–OF–WAY (EXISTING) NO. 1 PEN	CYAN	EXROW	SV–ROFW–EXST–LIN
0.1"	RIGHT–OF–WAY (PROPOSED) NO. 2.5 PEN	GREEN	CONTINUOUS	SV–ROFW–PROP–LIN
0.1"	RIGHT–OF–WAY (LIMITED ACCESS) NO. 1 PEN	CYAN	ROWL1	SV–LROW–EXST–LIN
	RIGHT–OF–WAY (LIMITED ACCESS) NO. 2.5 PEN	GREEN	ROWL1	SV–LROW–PROP–LIN
0.7" 0.05" 0.1"	SECTION LINE NO. 2.5 PEN	GREEN	SECT	SV–SECT–EXST–LIN
0.1" 0.7"	QUARTER SECTION LINE NO. 1 PEN	CYAN	QTRSECT	SV–QSCT–EXST–LIN
0.3" 0.1"	SIXTEENTH SECTION LINE NO. 1 PEN	CYAN	16THSECT	SV–16ST–EXST–LIN
0.8" 0.1" 0.2"	STATE/COUNTY/CORPORATE LIMIT NO. 2.5 PEN	GREEN	STATE	SV–222B–EXST–LIN
	STATE/COUNTY/CORPORATE LIMIT NO. 2.5 PEN	GREEN	STATE (PLINE .03"WIDE)	SV–222B–PROP–LIN

222A – USE RANG/TWNS
222B – USE STAT/CNTY/CITY
*** INSERT ELEVATION AT 6" INTERVALS (TEXT 0.1" HIGH)

American Public Works Association Washington State Chapter

City of Bellevue

LINETYPES

LINETYPE	DESCRIPTION	COLOR	LT NAME	LAYER
	UTILITIES (EXISTING):			
0.25" TV 0.1"	CABLE TELEVISION (AERIAL) NO. 0 PEN	RED	ATV	TV–ALIN–EXST–LIN
TV 0.1"	CABLE TELEVISION (BURIED) NO. 0 PEN	RED	TV	TV–BLIN–EXST–LIN
FM	FORCE MAIN NO. 0 PEN	MAGENTA	FM	SS–PLIN–EXST–LIN
G	GAS NO. 0 PEN	MAGENTA	G	GS–PLIN–EXST–LIN
O	OIL NO. 0 PEN	MAGENTA	O	OL–PLIN–EXST–LIN
0.25" P 0.1"	POWER (AERIAL) NO. 0 PEN	RED	AP	PO–ALIN–EXST–LIN
P	POWER (BURIED) NO. 0 PEN	RED	P	PO–BLIN–EXST–LIN
S	SANITARY SEWER NO. 0 PEN	WHITE	S	SS–GLIN–EXST–LIN
STE	STEAM NO. 0 PEN	MAGENTA	STE	ST–PLIN–EXST–LIN
D	STORM DRAINAGE NO. 0 PEN	WHITE	D	SD–2222–EXST–LIN
0.25" T 0.1"	TELEPHONE (AERIAL) NO. 0 PEN	RED	AT	TL–ALIN–EXST–LIN
T	TELEPHONE (BURIED) NO. 0 PEN	RED	T	TL–BLIN–EXST–LIN
0.1" 0.05"	UTILITY SERVICE LINE (GENERAL) NO. 000 PEN	YELLOW	SERV	11–SERV–EXST–LIN
W	WATER NO. 0 PEN	MAGENTA	W	WA–2222–EXST–LIN
	UTILITIES (PROPOSED):			
	MAIN LINE (LIST TYPE, SIZE, ETC.) NO. 0 PEN	*	CONTINUOUS (P–LINE .04" WIDE)	11–2222–PROP–LIN
	SERVICE (LIST TYPE, SIZE, ETC.) NO. 0 PEN	*	CONTINUOUS	11–SERV–PROP–LIN

* COLOR DEPENDS ON TYPE OF UTILITY (E.G. POWER, WATER, ETC.). TEXT IN UTILITY LINETYPES SPACED AT 3" INTERVALS.

11 – INDICATE UTILITY TYPE

2222 – USE ALIN/BLIN/GLIN/PLIN
ALIN – AERIAL LINE
BLIN – BURIED CONDUIT
GLIN – GRAVITY LINE
PLIN – PRESSURE LINE

American Public Works Association Washington State Chapter

City of Bellevue

TEXT STYLES

EXAMPLE	DESCRIPTION	STYLE	FONT	HEIGHT	COLOR	LAYER
EX. CONIFER	EXISTING FEATURES	80	SIMPLEX	0.08 INCH	YELLOW	SF-INFO-EXST-TXT
SCALE:	DRAWING SCALE	SCALE	ITALIC	0.12 INCH	YELLOW	SV-NORA-EXST-TXT
PROJECT	PROJECT TITLE	200	SIMPLEX	0.20 INCH	GREEN	RE-TITL-EXST-TXT
PROPOSED	GENERAL INSTRUCTION	120	SIMPLEX	0.12 INCH	CYAN	RE-INST-PROP-TXT
SEWER	PROPOSED SANITARY SEWER INSTRUCTIONS	120	SIMPLEX	0.12 INCH	CYAN	SS-INST-PROP-TXT
WATER	PROPOSED WATER INSTRUCTIONS	120	SIMPLEX	0.12 INCH	CYAN	WA-INST-PROP-TXT
STREET	STREET NAMES	240	SIMPLEX	0.24 INCH	GREEN	RE-STRT-EXST-TXT

NOTES

1. READ APWADOC2.DOC FOR MORE INFORMATION ON SYMBOL/LINETYPE INSERTION AND USE OF APWA MENUS.
2. INSERT MON OR MON-IN-CASE SYMBOLS INTO CENTER OF MONUMENTED SECTION CORNERS.
3. USE WATER VALVE AND FITTING SYMBOLS FOR SEWER FORCEMAIN VALVES AND FITTINGS.
4. LINETYPES ARE LOADED FROM THE APWALIN2.LIN LINETYPE FILE.
5. DITCH LINETYPE FLOW DIRECTION ARROW MUST BE INSERTED AT ENDS OF DASHED LINES AS SHOWN ABOVE (BLOCK NAME IS "FL").
6. COMPOSITE LINETYPES ARE DRAWN USING LISP ROUTINES IN APWA MENUS. ALTERNATE METHOD IS TO INSERT BLOCKS ALONG CONTINUOUS LINES AS FOLLOWS:

LINETYPE	BLOCK	SPACING (INCHES)
EXISTING FENCE	FP	1.0
PROPOSED FENCE	FP	1.0
EXISTING GUARDRAIL	GR	1.0
PROPOSED GUARDRAIL	GRP	1.0
EXISTING RAILROAD	RR	0.5
EXISTING RETAINING WALL	EW	0.25
PROPOSED RETAINING WALL	PW	0.25
DEPRESSION CONTOUR	DEP	0.1
LIMITED ACCESS R.O.W.	LA	0.1

7. LINEWEIGHTS ARE BASED ON DISPOSABLE LIQUID INK PLOTTER

POINT SIZES:	COLOR	PEN SIZE	NUMBER
	YELLOW	0.25	3x0
	MAGENTA RED WHITE	0.35	0
	CYAN	0.5	1
	GREEN	0.7	2 1/2

American Public Works Association Washington State Chapter

City of Bellevue

APPENDIX D-6.....STORM AND SURFACE WATER APPROVED MATERIALS LIST

The following manufacturers have been approved for use for storm and surface water construction. Refer to Chapter D6 - Materials for approved manufacturers of other materials for storm and surface water construction. Where specific manufacturers are listed, no other manufacturer may be used without prior approval by the Utility.

BIORETENTION SOIL MIX (BSM) MATERIALS

Gravelly sands

- Green Earth Screen Sand (Green Earth Technologies, Bellingham)
- Miles Sand and Gravel Utility Sand (Miles Sand and Gravel, Roy)

COMPOST AND MULCH FOR BIORETENTION

Compost Mixes

- Cedar Grove compost (Maple Valley)
- GroCo, Steerco (many suppliers)

OVERFLOWS FOR BIORETENTION

Overflow products

- Atrium grates 3”, 4”, and 5”: NDS models 70, 75, and 80
- Atrium grate: ADS model 0663DX
- Neenah grate: R-4346, R-2560-E2, R-2561, R-4351-C, R-4353, R-4351-B, R-4351-D
- Olympic Foundry: MH25

PERMEABLE PAVEMENT MATERIALS

Wearing Course

- Invisible Structures GrassPave2
- Presto Geosystems
- Uni-Eco-Stone
- Uni-Ecoloc
- Eco-Priori
- Hastings Check Block
- Grasscrete
- Turfstone
- Geoblock 5150
- Tufftrack Grassroad Pavers
- Grassy Pavers
- Invisible Structures Gravelpave2
- Turf & Gravel Pavers
- Aqua Pave Old Countrystone
- Aqua Pave Standard

DRAFT

- Aqua Pave Venetian Cobble

Geotextile products

- Geotextile Nonwoven polypropylene:
- Ling Industrial Fabrics, Inc. model 275EX
- TNS Advantaged Technologies models R060, R080
- Carthage Mills models FX60HS, FX70HS, and FX80HS
- DuPont DeNemours model SF65
- Ten Carte (Mirafi) models 600X, FW700, 1120N
- Skaps Industries LLC model GT60
- Propex Inc. model GeoTex801

Underdrain Materials for Bioretention or Permeable Pavement

Pipe Manufacturers - Johnson, CertainTeed Corporation Lodi, CA
Couplers - Fernco, Davision, MI

OBSERVATION PORTS FOR PERVIOUS PAVEMENTS OR BIORETENTION

Expandable pipe plugs - Cherne Gripper plugs models MC-99930, MC-99929, MC-99931, MC-99935

ROOF DOWNSPOUT DISPERSION MATERIALS

Pop-up drainage emitter - NDS model L422G

RAIN RECYCLING MATERIALS

Rain barrels - Chicago model 18122, Suncast model RB5010PK, Emsco model 2771-1, Mayne model 5847WH, Fiskars model 5997

STORM DRAIN PIPE, AND CULVERT MATERIALS

All manufacturers that meet the performance requirements specified under the material section of the Standards including the following:

- Reinforced Concrete pipe: “RCP Pipe” Oldcastle Precast, Auburn WA
- Profile Wall PVC Pipe: “PW Pipe” Pacific Western Extruded Plastics, Eugene OR; “Ultra Rib” lpex Inc., Langley, British Columbia, Canada
- Corrugated Polyethylene Pipe: Advanced Drainage Systems, Inc., Washougal WA; Hancore, Inc., Olympia WA
- Corrugated Polyethylene Tubing: Advanced Drainage Systems, Inc., Washougal WA; Hancore, Inc., Olympia WA

PRECAST MANHOLE AND CATCH BASIN SECTIONS

DRAFT

- Oldcastle Precast
- Granite Precast, Shope Concrete Products
- Quality Concrete Products Inc.
- Cuz Concrete Products, Inc

POLYPROPYLENE MANHOLE STEPS

- Lane International Corporation, P-14938
- M.A. Industries, Inc., PS-2-PF

MANHOLE FRAMES AND COVERS

- Inland Foundry Co.
- Olympic Foundry
- East Jordan Iron Works

CATCH BASIN FRAMES AND COVERS

- Inland Foundry Co.
- Olympic Foundry
- East Jordan Iron Works

RESIDENTIAL CATCH BASINS

- ADS models 0909SD2, 0909SD4, 1212SD2, 1212SD4
- Hanson Type 45
- Nyloplast Drawing No. 7001-110-374
- NDS # 1216, 1217, 1225

VAULT HATCH/DOORS

L.W. Products Company, Inc., Models HHD and HHS (H-30 rated)

Hatches shall include recessed padlock hasp sized to accept City of Bellevue Surface Water Division padlocks.

Metal lids, hatches and access covers shall be constructed with a gray non-slip treatment by one of the approved products below:

Manufacturer	*COF	Product
LW Products	.95	Thermion Arc Metal Spray
SlipNOT Metal Safety Flooring	.99	SlipNOT Grip Plate
IKG Industries	>.80	MEBAC 1 (Metal Bonded Anti-Slip Coatings)
Grating Pacific LLC	.92	ALGRIP Safety Floor Plates

*COF – coefficient of friction as determined by ASTM C1028-89

DRAFT

APPENDIX D-7

STORM AND SURFACE WATER REFERENCE STANDARDS

1. STANDARDS FOR UTILITIES INSTALLED IN PROXIMITY OF SEATTLE PUBLIC UTILITIES TRANSMISSION PIPELINES.....A(D7-1)

Standards for Utilities Installed in Proximity of Seattle Public Utilities Transmission Pipelines:

Seattle Public Utilities (SPU) operates several major water transmission pipelines within King County. These pipelines supply nearly all the domestic water to the communities in western King County. In some cases these pipelines are located within SPU's fee-owned right of way, within easements on private property or within the city streets, county road or state highways.

Vibrations, heavy loads, and other construction activities can damage these pipelines. If a pipeline is damaged there could be substantial collateral damage. For this reason SPU needs to review plans and apply standard pipe protection procedures for any project in close proximity to, or that will cross these pipelines.

In order to review any such project SPU will need:

- 3 copies of scalable plans that show the proposed improvements as they are located in relation to SPU facilities or electronic plans in pdf format.
- Names, addresses, and telephone numbers for the appropriate contact persons of the entity (ies) responsible for the work, including a contact person whom can be reached 24 hours a day.
- SPU's Record Plans can be obtained from the City of Seattle Vault which is located at 47th floor of the City of Seattle Municipal Tower, 700 5th Ave., Seattle, 98124. Phone: 206-684-5132.
  http://www.seattle.gov/util/Engineering/Records_Vault/Hours_&_Location/COS_001833.asp

SPU's General Design Requirements:

- When crossing SPU's pipelines the installed "facility" should be at a right angle to SPU's pipeline or parallel with the centerline of a controlling road.
- When crossing SPU's pipelines the vertical separation between the installed facility and SPU's pipelines should be 18 inches for a sewer line and 12 inches for all other facilities over the pipelines. The separation should be a minimum of 24 inches for all facilities installed under the pipelines.
- When crossing SPU's pipelines with a water or sewer main of ductile iron pipe (d.i.p.), one (19 to 20 foot) section must be centered on SPU's pipeline so that the section joints are not over or under any portion of SPU's pipeline. The joints must be pressurized and tested for leaks.
- When crossing SPU's pipelines, if the installed facility is not made of ductile iron pipe, the facility must be installed in a steel casing with walls at least 1/4 inch thick.
- When crossing SPU’s pipelines if the facility is installed within SPU fee-owned right-of-way, the steel casing must be installed the entire width of the right of way. If the facility is installed within a street right of way, the steel casing must extend at least 10 feet on each side of the pipeline.
- SPU's pipelines are set in a bed of pea gravel. Construction must be performed in a manner that will not allow the pea gravel to escape from under the pipeline.
- Construction methods must be employed to support the pipeline during excavation.

- "Trenchless" construction methods must be approved on a site by site basis due to the high probability of substantial collateral damage if one of SPU's pipelines is damaged.
- Cathodic pipe protection methods may be required.
- For parallel installations, SPU would like 10 feet of separation on each side of its pipelines.
- Shallow curb inlets can be closer than 10 feet if ductile iron is used and the drain line diverts the water to a catch basin at a remote location.
- Special protections or bridging methods may be required to protect the pipeline due to the width and/or depth of trenching in the vicinity of SPU pipelines.
- If SPU's pipeline is exposed, SPU wants to inspect the pipe prior to back filling.
- Special fill and/or compaction may be required depending on the method and depth of excavation.
- Overhead wire installations typically require a minimum of 25 feet of vertical clearance from the ground.
- Vibrations could damage some of SPU's pipelines; therefore pile driving, blasting and other vibration producing work may be restricted.
- Heavy loads could damage some of SPU's pipelines. Therefore pipe protection may be necessary if heavy equipment crosses the pipe. Typical protection would include temporary bridging using timbers and steel plate.

SPU Operations requirements:

- Notify SPU at least 48 hours notice prior to construction. Locating SPU's pipeline by potholing must be supervised. Call SPU's Lake Youngs Operations at 206-684-3933.
- Any work in close proximity to SPU's pipeline (including locating by potholing) must be supervised by SPU. Call SPU's Lake Youngs Headquarters at 206-684-3933 at least 48 hours in advance.

Questions

Teri Hallauer
Sr. Real Property Agent
206-684-5971
Fax: 206-615-1215
teri.hallauer@seattle.gov

Audrey Hansen
Manager, Real Estate Services
206-684-5877

Seattle Public Utilities Real Estate Services
Seattle Municipal Tower
700 Fifth Avenue, Suite 4900
P.O. Box 34018
Seattle, WA 98124-4018

APPENDIX D-8

STANDARD DETAILS

DETAIL	NUMBER
CONCRETE INLET	D-1
CATCH BASIN TYPE 1	D-2
CATCH BASIN TYPE 1-L	D-3
CATCH BASIN TYPE 2	D-4
LADDER, STEP, AND TOP SLAB, DETAILS	D-5
VANED GRATE	D-6
PARKING LOT/AREA GRATE	D-7
SOLID COVER	D-8
STANDARD FRAME INSTALLATION	D-9
THROUGH-CURB INLET FRAME	D-10
THROUGH-CURB INLET FRAME INSTALLATION	D-11
FRAME & GRATE FOR EXISTING ROLLED CURB	D-12
EXISTING ROLLED CURB FRAME & GRATE INSTALLATION	D-13
GRATE FOR EXISTING ROLLED CURB INSTALLATION	D-14
CONVERSION RISER FOR CATCH BASIN TYPE 1-L	D-15
AREA INLET	D-16
MANHOLE TYPE 1	D-17
MANHOLE TYPE 2	D-18
MANHOLE TYPE 3	D-19
MANHOLE TYPE 4	D-20
24” MANHOLE RING AND COVER	D-21
24” BOLT-LOCKING MANHOLE RING & COVER	D-22
MANHOLE/CATCH BASIN ADJUSTMENT DETAIL	D-23
CORRUGATED METAL MANHOLE	D-24
TYPICAL TRENCH DETAIL	D-25
FLOW CONTROL STRUCTURE	D-26
PIVOTING SHEAR GATE DETAIL	D-27
SCREW-TYPE SHEAR GATE	D-28

DRAFT

SHEAR GATE VALVE VAULT D-29
VALVE BOX AND EXTENSION INSTALLATION D-29A
VALVE OPERATING EXTENSION D-29B
DRY DETENTION POND D-30
WATER QUALITY POND D-30A
DETENTION PIPE D-31
DETENTION VAULT D-32
TAPPING TEES FOR DRAIN PIPE D-33
BEVELED END PIPE SECTION D-34
ROCK-LINED DITCHES D-35
GRASS-LINED DITCH D-36
SIDEWALK DRAIN D-37
ENERGY DISSIPATOR D-38
DEBRIS CAGE D-39
(NOT USED) D-40
(NOT USED) D-41
SPILL CONTROL (SC) SEPARATOR – TYPE 1 ..... D-42
SPILL CONTROL (SC) SEPARATOR – TYPE 2 ..... D-43
SPILL CONTROL (SC) SEPARATOR – TYPE 3 ..... D-43A
DRAINAGE FACILITY MAINTENANCE ACCESS D-44
GATE/BOLLARD PLACEMENT D-45
PIPE BEDDING D-46
RUNOFF TREATMENT VAULT (WET VAULT) D-47
COMBINED VAULT (DETENTION AND RUNOFF TREATMENT) D-48
SUMP WITH RISER PIPE D-49
(NOT USED) D-50
TRAFFIC BEARING ACCESS FOR CORRUGATED METAL MANHOLE D-51
CLEAN OUT TO GRADE D-52
TRASH RACK/DEBRIS BARRIER D-53
SOIL/CEMENT PIPE ANCHORS D-54
(NOT USED) D-55
CASING INSTALLATION D-56
PIPE STAKE ANCHOR ASSEMBLY D-57

DRAFT

DRIVEWAY CULVERT D-58
ROCK PROTECTION OUTFALL D-59
BIRD CAGE TRASH RACK STRUCTURE D-60
AMENDED SOILS NDP-1
BIORETENTION CELL NDP-2
BIORETENTION SWALE NDP-3
BIORETENTION PLANTER –WITH UNDERDRAIN NDP-4
BIORETENTION PLANTER – INFILTRATION NDP-4A
BIORETENTION PLANTER – UNDERDRAIN AND OVERFLOW CONNECTED TO STORM SYSTEM..... NDP-5
BIORETENTION OVERFLOW WITH CONVEYANCE FURROW NDP-6
BIORETENTION OVERFLOW WITH PIPE CULVERT NDP-7
OVERFLOW CONFIGURATIONS FOR BIORETENTION NDP-8
OBSERVATION PORT FOR BIORETENTION NDP-9
DRAIN CURB CUT OPENING FOR BIORETENTION NDP-10
POROUS ASPHALT OR PERVIOUS CONCRETE PAVEMENT SECTION NDP-11
PERMEABLE PAVER SYSTEMS..... NDP-12PERMEABLE PAVEMENT SIDEWALK IN PLANTING STRIP NDP-13
PERMEABLE PAVEMENT SIDEWALK NDP-14
CHECK DAM AND INTERCEPTOR FOR PERVIOUS PAVEMENT ON SLOPES..... NDP-15
OBSERVATION PORT FOR PERMEABLE PAVEMENT NDP-16
OBSERVATION PORT COVERS FOR PERMEABLE PAVEMENT NDP-17
RAIN RECYCLING SYSTEM – RAIN BARREL NDP-18
RAIN RECYCLING SYSTEM – CISTERN NDP-19
POP-UP DRAINAGE EMITTER..... NDP-20
REVERSE SLOPE SIDEWALK..... NDP-21
ROOF DOWNSPOUT DISPERSAL TRENCH DETAIL……..NDP-22
ROOF DOWNSPOUT INFILTRATION TRENCH……...NDP-23
(NOT USED)…… NDP-24
RESIDENTIAL ROOF DOWNSPOUT PERFORATED PIPE CONNECTION……...NDP-25

DRAFT

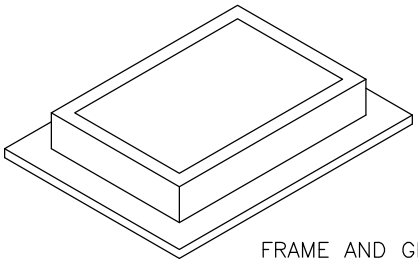

FRAME AND GRATE, SEE APPLICABLE STANDARD DETAILS

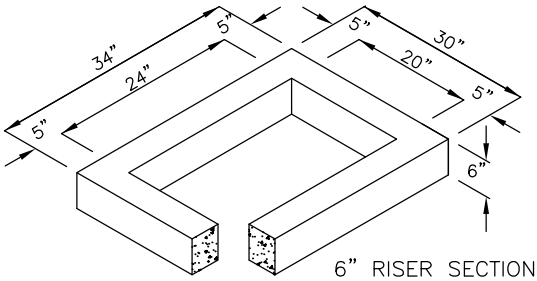

6" RISER SECTION

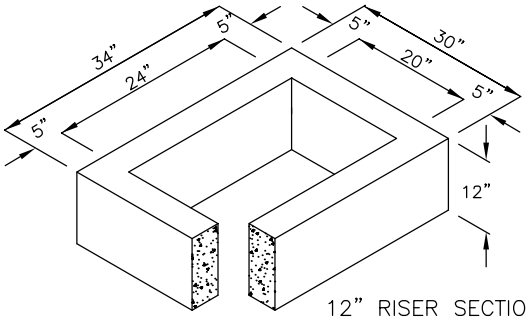

12" RISER SECTION

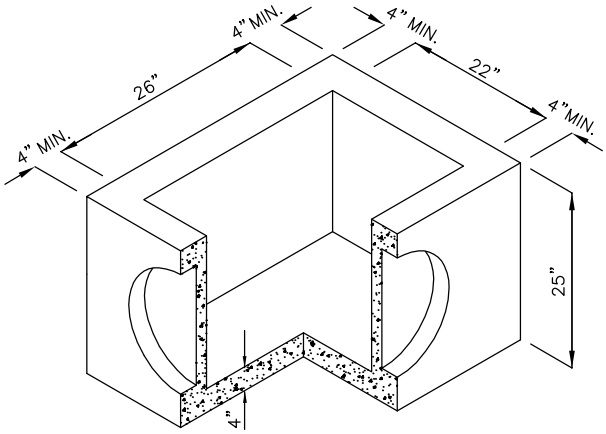

PRECAST BASE SECTION (MEASUREMENT AT THE TOP OF THE BASE)

NOTES:

1. CONCRETE INLET TO BE CONSTRUCTED IN ACCORDANCE WITH ASTM C478 & C890 UNLESS OTHERWISE SHOWN ON PLANS OR NOTED IN THE STANDARD SPECIFICATIONS.
2. AS AN ACCEPTABLE ALTERNATIVE TO REBAR, WELDED WIRE FABRIC HAVING A MIN. AREA OF 0.12 SQUARE INCHES PER FOOT MAY BE USED. WELDED WIRE FABRIC SHALL COMPLY TO ASTM A497. WIRE FABRIC SHALL NOT BE PLACED IN KNOCKOUTS.
3. VERTICAL EDGE OF RISER OR BRICK SHALL NOT BE MORE THAN 2" FROM VERTICAL EDGE OF CONCRETE INLET.
4. PRECAST BASES SHALL BE FURNISHED WITH CUTOUTS OR KNOCKOUTS. KNOCKOUTS SHALL HAVE A WALL THICKNESS OF 2" MIN. ALL PIPE SHALL BE INSTALLED IN FACTORY PROVIDED KNOCKOUTS. UNUSED KNOCKOUTS NEED NOT BE GROUTED IF WALL IS LEFT INTACT.
5. KNOCKOUT OR CUTOUT HOLE SIZE IS EQUAL TO PIPE OUTER DIAM. PLUS CONCRETE INLET WALL THICKNESS.
6. ROUND KNOCKOUTS MAY BE ON ALL 4 SIDES WITH MAX. DIAM. OF 16".
7. THE MAX. DEPTH FROM THE FINISHED GRADE TO THE PIPE INVERT IS 4'-0".
8. THE TAPER ON THE SIDES OF THE PRECAST BASE SECTION AND RISER SECTION SHALL NOT EXCEED 1/2"/FT.
9. CONCRETE INLET FRAME AND GRATES SHALL BE IN ACCORDANCE WITH STANDARD SPECIFICATIONS. MATING SURFACES SHALL BE FINISHED TO ASSURE NON-ROCKING FIT WITH ANY COVER POSITION.
10. APPLY NON-SHRINK GROUT TO INSIDE AND OUTSIDE OF ALL JOINTS, RINGS, RISERS AND FRAMES.

City of Bellevue

STORM AND SURFACE WATER UTILITY

TITLE

CONCRETE INLET

JANUARY 2017

NO SCALE

NO. D-1

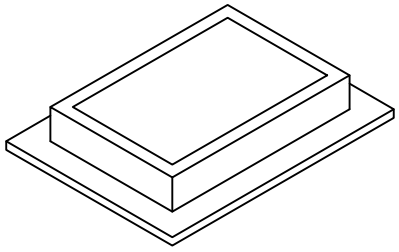

FRAME AND GRATE,
SEE APPLICABLE
STANDARD DETAILS

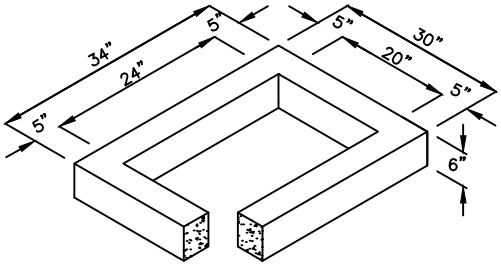

6" RISER SECTION

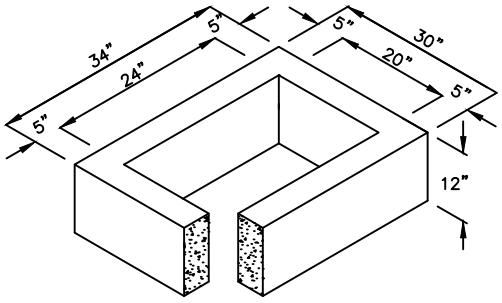

12" RISER SECTION

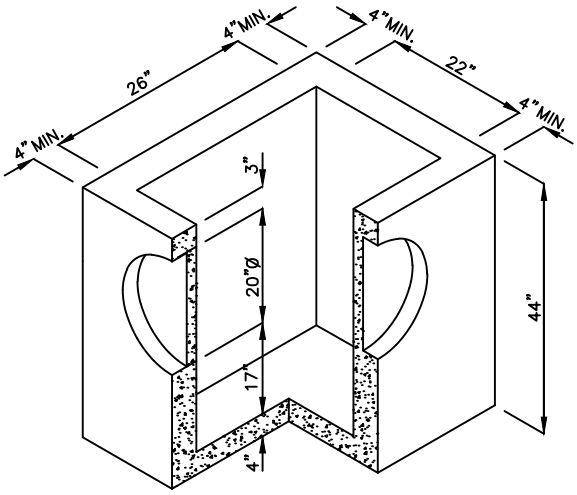

PRECAST BASE SECTION
(MEASUREMENT AT THE
TOP OF THE BASE)

NOTES:

1. CATCH BASINS SHALL BE CONSTRUCTED IN ACCORDANCE WITH ASTM C478 (AASHTO M 199) & C890 UNLESS OTHERWISE SHOWN ON PLANS OR NOTED IN THE STANDARD SPECIFICATIONS.
2. AS AN ACCEPTABLE ALTERNATIVE TO REBAR, WELDED WIRE FABRIC HAVING A MIN. AREA OF 0.12 SQUARE INCHES PER FOOT MAY BE USED. WELDED WIRE FABRIC SHALL COMPLY TO ASTM A497 (AASHTO M 221). WIRE FABRIC SHALL NOT BE PLACED IN KNOCKOUTS.
3. APPLY NON–SHRINK GROUT TO INSIDE AND OUTSIDE OF ALL JOINTS, RINGS, RISERS AND FRAMES.
4. PRECAST BASES SHALL BE FURNISHED WITH CUTOUTS OR KNOCKOUTS. KNOCKOUTS SHALL HAVE A WALL THICKNESS OF 2" MIN. ALL PIPE SHALL BE INSTALLED IN FACTORY PROVIDED KNOCKOUTS. UNUSED KNOCKOUTS NEED NOT BE GROUTED IF WALL IS LEFT INTACT.
5. KNOCKOUT OR CUTOUT HOLE SIZE IS EQUAL TO PIPE OUTER DIAM. PLUS CATCH BASIN WALL THICKNESS.
6. ROUND KNOCKOUTS MAY BE ON ALL 4 SIDES, WITH MAX. DIAM. OF 20". KNOCKOUTS MAY BE EITHER ROUND OR "D" SHAPE.
7. THE MAX. DEPTH FROM THE FINISHED GRADE TO THE PIPE INVERT IS 4'–0".
8. THE TAPER ON THE SIDES OF THE PRECAST BASE SECTION AND RISER SECTION SHALL NOT EXCEED 1/2"/FT.
9. CATCH BASIN FRAME AND GRATE SHALL BE IN ACCORDANCE WITH STANDARD SPECIFICATIONS. MATING SURFACES SHALL BE FINISHED TO ASSURE NON–ROCKING FIT WITH ANY COVER POSITION.
10. VERTICAL EDGE OF RISER OR BRICK SHALL NOT BE MORE THAN 2" FROM VERTICAL EDGE OF CATCH BASIN WALL.

City of Bellevue

STORM AND SURFACE WATER UTILITY

TITLE

CATCH BASIN TYPE I

JANUARY 2017

NO SCALE

NO. D–2

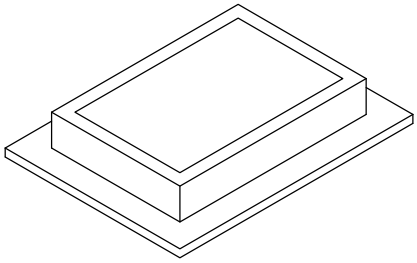

FRAME AND GRATE,
SEE APPLICABLE
STANDARD DETAILS.

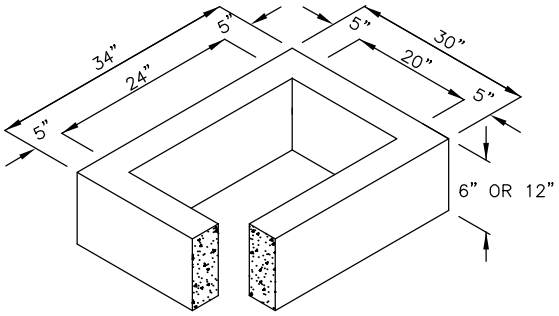

RISER SECTION

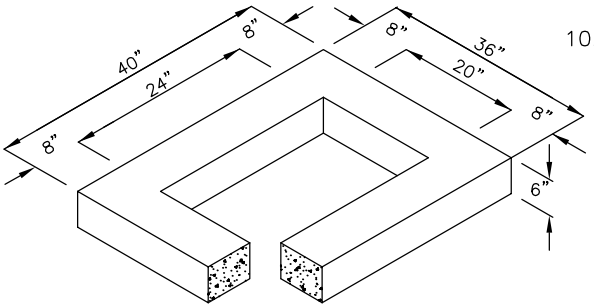

6" REDUCING SECTION

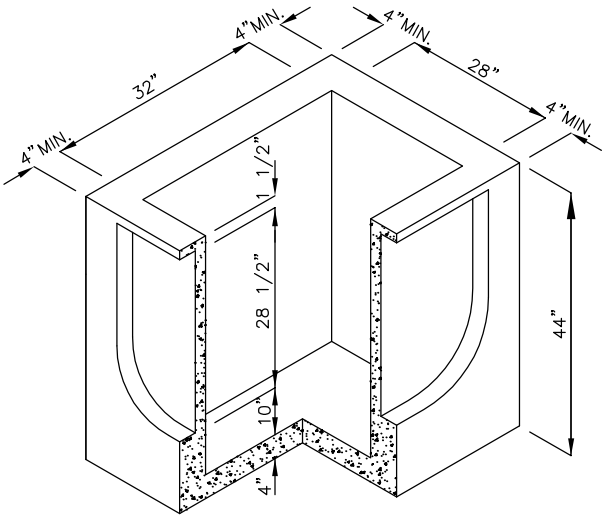

PRECAST BASE SECTION
(MEASUREMENT AT THE
TOP OF THE BASE)

NOTES:

1. CATCH BASINS SHALL BE CONSTRUCTED IN ACCORDANCE WITH ASTM C478 (AASHTO M 199) & C890 UNLESS OTHERWISE SHOWN NO PLANS OR NOTED IN THE STANDARD SPECIFICATIONS.
2. AS AN ACCEPTABLE ALTERNATIVE TO REBAR, WELDED WIRE FABRIC HAVING A MIN. AREA OF 0.12 SQUARE INCHES PER FOOT MAY BE USED. WELDED WIRE FABRIC SHALL COMPLY TO ASTM A497 (AASHTO M 221). WIRE FABRIC SHALL NOT BE PLACED IN KNOCKOUTS.
3. APPLY NON–SHRINK GROUT TO INSIDE AND OUTSIDE OF ALL JOINTS, RINGS, RISERS AND FRAMES.
4. PRECAST BASES SHALL BE FURNISHED WITH CUTOUTS OR KNOCKOUTS. KNOCKOUTS SHALL HAVE A WALL THICKNESS OF 2" MIN. ALL PIPE SHALL BE INSTALLED IN FACTORY PROVIDED KNOCKOUTS. UNUSED KNOCKOUTS NEED NOT BE GROUTED IF WALL IS LEFT INTACT.
5. KNOCKOUT OR CUTOUT HOLE SIZE IS EQUAL TO PIPE OUTER DIAM. PLUS CATCH BASIN WALL THICKNESS.
6. KNOCKOUTS MAY BE ON ALL 4 SIDES WITH MAX. DIAM. OF 28". KNOCKOUTS MAY BE EITHER ROUND OR "D" SHAPE.
7. THE TAPER ON THE SIDES OF THE PRECAST BASE SECTION AND RISER SECTION SHALL NOT EXCEED 1/2"/FT.
8. CATCH BASIN FRAME AND GRATE SHALL BE IN ACCORDANCE WITH STANDARD SPECIFICATIONS. MATING SURFACES SHALL BE FINISHED TO ASSURE NON–ROCKING FIT WITH ANY COVER POSITION.
9. MAX. DEPTH FROM FINISHED GRADE TO PIPE INVERT SHALL BE 5'–0".
10. VERTICAL EDGE OF REDUCING SECTION OR BRICK SHALL NOT BE MORE THAN 2" FROM VERTICAL EDGE OF CATCH BASIN WALL.

City of Bellevue

STORM AND SURFACE WATER UTILITY

TITLE

CATCH BASIN TYPE 1–L

NO. D–3

JANUARY 2017

NO SCALE

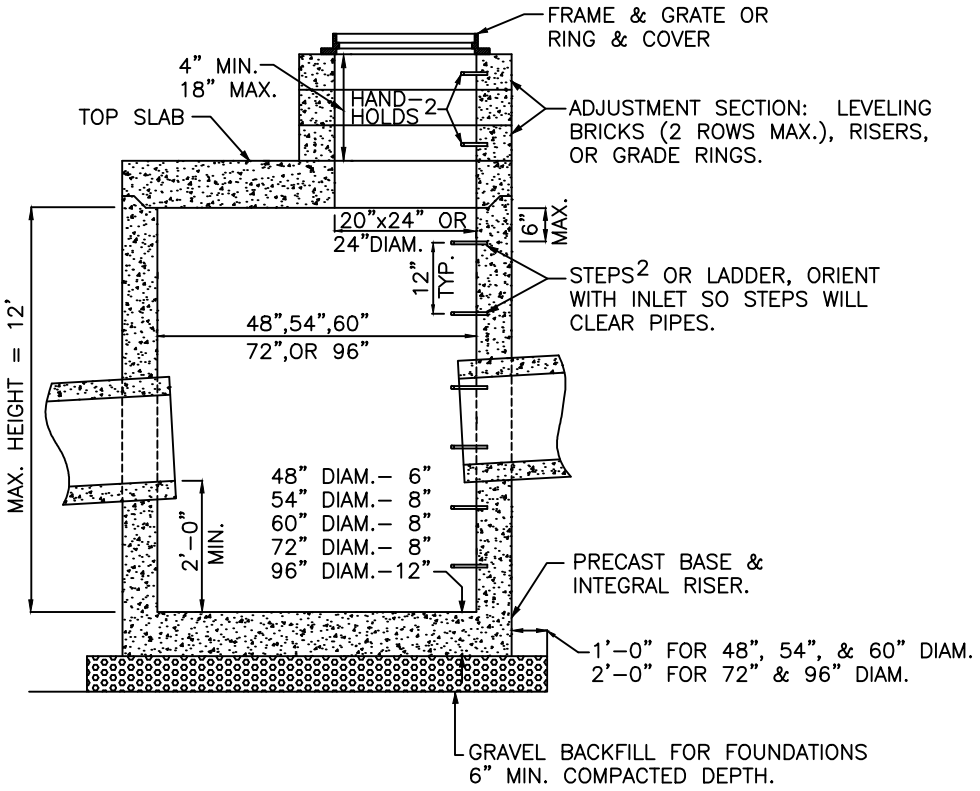

NOTES:

1. CATCH BASINS SHALL BE CONSTRUCTED IN ACCORDANCE WITH ASTM C478 (AASHTO M199) AND ASTM C890 UNLESS OTHERWISE SHOWN ON PLANS OR NOTED IN THE WSDOT STANDARD SPECIFICATIONS.
2. HANDHOLDS IN ADJUSTMENT SECTION SHALL HAVE 3" MIN. CLEARANCE. STEPS IN CATCH BASIN SHALL HAVE 6" MIN. CLEARANCE. SEE STD. DTL. NO D-5, CATCH BASIN DETAILS. HANDHOLDS SHALL BE PLACED IN ALTERNATING GRADE RINGS OR LEVELING BRICK COURSE WITH A MIN. OF ONE HANDHOLD BETWEEN THE LAST STEP AND TOP OF THE FINISHED GRADE.
3. APPLY NON-SHRINK GROUT TO INSIDE AND OUTSIDE OF ALL JOINTS, RINGS, RISERS AND FRAMES. ALL PRECAST CONCRETE SHALL BE CLASS 4000.
4. PRECAST BASES SHALL BE FURNISHED WITH CUTOUTS OR KNOCKOUTS. KNOCKOUTS SHALL HAVE WALL THICKNESS OF 2" MIN. UNUSED KNOCKOUTS NEED NOT BE GROUTED IF WALL IS LEFT INTACT. PIPES SHALL BE INSTALLED ONLY IN FACTORY KNOCKOUTS UNLESS OTHERWISE APPROVED BY THE ENGINEER.
5. KNOCKOUT OR CUTOUT HOLE SIZE SHALL EQUAL PIPE OUTER DIAM. PLUS CATCH BASIN WALL THICKNESS. MAX. HOLE SIZE SHALL BE 36" FOR 48" CATCH BASIN, 42" FOR 54" C.B., 48" FOR 60" C.B., 60" FOR 72" C.B., 84" FOR 96" C.B. MIN. DISTANCE BETWEEN HOLES SHALL BE 8" FOR 48", 54", AND 60" C.B.; 12" FOR 72" AND 96" C.B.
6. CATCH BASIN FRAMES AND GRATES OR COVERS SHALL BE IN ACCORDANCE WITH SEC. 7.05 OF THE STANDARD SPECIFICATIONS. MATING SURFACES SHALL BE FINISHED TO ASSURE NON-ROCKING FIT WITH ANY COVER POSITION.
7. FOR HEIGHTS OF 12' OR LESS, MINIMUM SOIL BEARING VALUE SHALL EAUAL 3,300 POUNDS PER SQUARE FOOT. FOR HEIGHTS OVER 12', MIN. SOIL BEARING VALUE SHALL EQUAL 3,800 POUNDS PER SQUARE FOOT.
8. FOR DETAILS SHOWING LADDER, STEPS, HANDRAILS AND TOP SLABS, SEE STD. DTL. NO. D-5.
9. SEE THE STANDARD SPECIFICATIONS SEC. 7-05.3 FOR JOINT REQUIREMENTS.

JANUARY 2017 NO SCALE

City of Bellevue

STORM AND SURFACE WATER UTILITY

TITLE

CATCH BASIN TYPE 2
48", 54", 60", 72", & 96"

NO. D-4

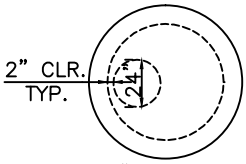

24" ROUND

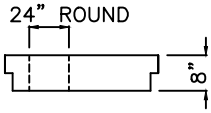

48", 54" & 60" TOP SLAB

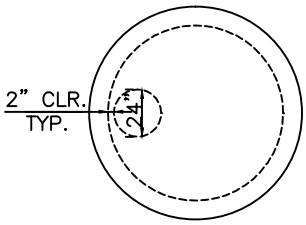

24" ROUND

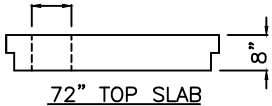

72" TOP SLAB

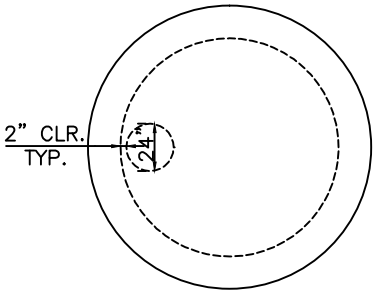

24" ROUND

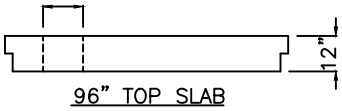

96" TOP SLAB

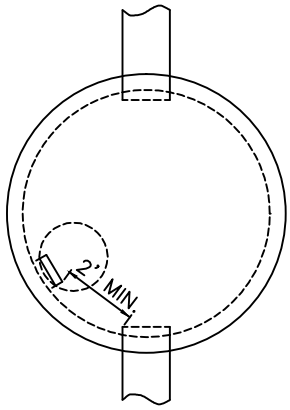

TYPICAL ORIENTATION
FOR ACCESS AND STEPS

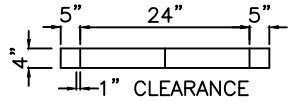

GRADE RING

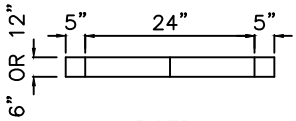

RISER

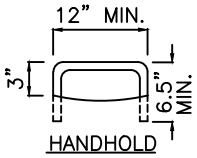

HANDHOLD

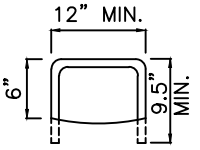

CATCH BASIN STEP

* ALL STEPS & RUNGS #8 GALV. DEFORMED REBAR OR POLYPROPYLENE.

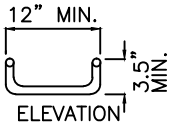

ELEVATION

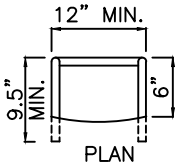

PLAN

DROP RUNG
CATCH BASIN STEP

NOTES:

1. PROPRIETARY CATCH BASIN HANDHOLDS AND STEPS ARE ACCEPTABLE, PROVIDED THAT THEY CONFORM TO SEC. R, ASTM C478, AASHTO M-199 AND MEET ALL WISHA REQUIREMENTS.
2. CATCH BASIN STEP/HANDHOLD LEGS SHALL BE PARALLEL OR APPROXIMATELY RADIAL AT THE OPTION OF THE MANUFACTURER, EXCEPT THAT ALL STEPS IN ANY CATCH BASIN SHALL BE SIMILAR. PENETRATION OF OUTER WALL BY A LEG IS PROHIBITED.
3. HANDHOLDS AND STEPS SHALL HAVE "DROP" RUNGS AS SHOWN ON DETAIL OR PROTUBERANCES TO PREVENT SIDEWAYS SLIP.
4. SLAB OPENING 24" DIAM.
5. PLASTIC STEPS SHALL BE POLYPROPYLENE AND CONFORM TO ASTM D-4101 WITH 1/2" ASTM-615 GRADE 60 STEEL REINFORCING BAR. LANE P-14938, M.A. PS2-PF, OR EQUAL.
6. STEPS OF LADDERS OR STEPS SHALL EXTEND TO WITHIN 16" OF BOTTOM OF CATCH BASIN.
7. HANGING LADDERS SHALL BE PERMANENTLY FASTENED AT TOP BY HANGING ON STEP OR BY BOLTING OR EMBEDDING IN CONCRETE. EACH SHALL BE EMBEDDED AT BOTTOM IN BASE.
8. ADDITIONAL SAFETY FEATURES MAY BE REQUIRED IN VERY DEEP OR UNUSUAL STRUCTURES.
9. SQUARE OPENING ALLOWED ONLY FOR CATCH BASINS DESIGNED TO COLLECT WATER.

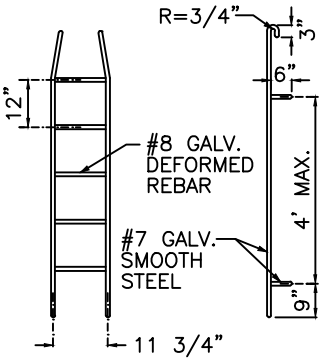

PREFABRICATED LADDER

City of Bellevue

STORM AND SURFACE WATER UTILITY

TITLE

LADDER, STEP, AND TOP SLAB, DETAILS

JANUARY 2017

NO SCALE

NO. D-5

PLAN

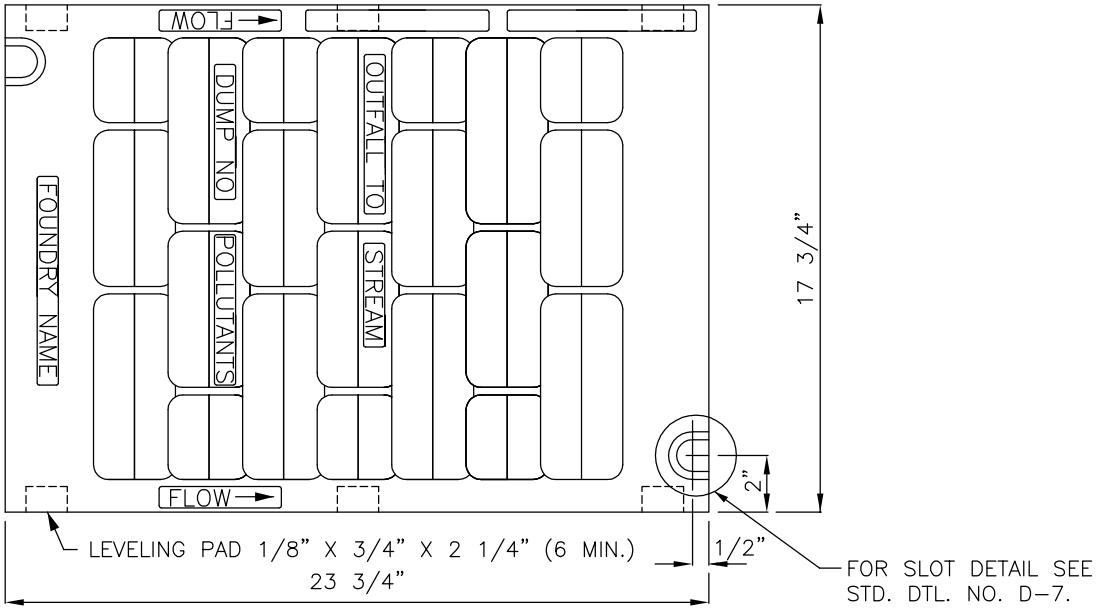

ELEVATION

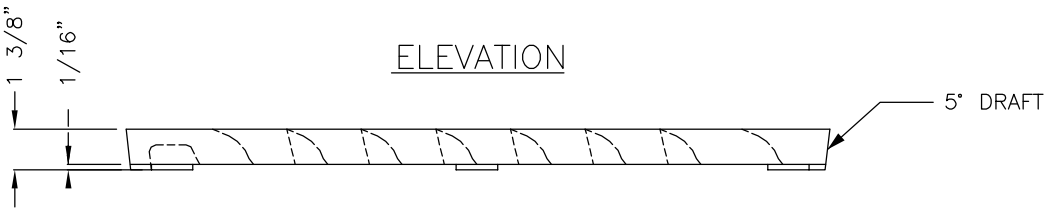

NOTES:

1. USE WITH TWO LOCKING BOLTS 5/8"-11 NC STAINLESS TYPE 304 STEEL SOCKET HEAD (ALLEN HEAD) BOLTS, 2" LONG. NOTE SLOT DETAIL.
2. MATERIAL IS DUCTILE IRON ASTM A536 GRADE 80-55-06.
3. "OUTFALL TO STREAM DUMP NO POLLUTANTS" IN RAISED LETTERS SHALL BE LOCATED ON GRATE AS SHOWN, OR ON BORDER AREA.
4. SHALL CONFORM TO SEC. 7.05 OF THE STANDARD SPECIFICATIONS.
5. WELDING IS NOT PERMITTED.
6. EDGES SHALL HAVE 0.125" RADIUS, 0.125" CHAMBER OR COMPLETE DEBURRING.
7. USE A BI-DIRECTIONAL VANED GRATE IN SAG VERTICAL CURVES.

City of Bellevue

STORM AND SURFACE WATER UTILITY

TITLE

VANED GRATE

JANUARY 2017

NO SCALE

NO. D-6

TOP VIEW

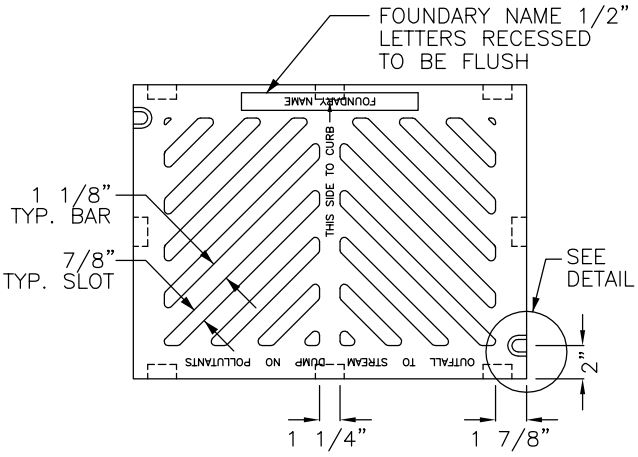

BOTTOM VIEW

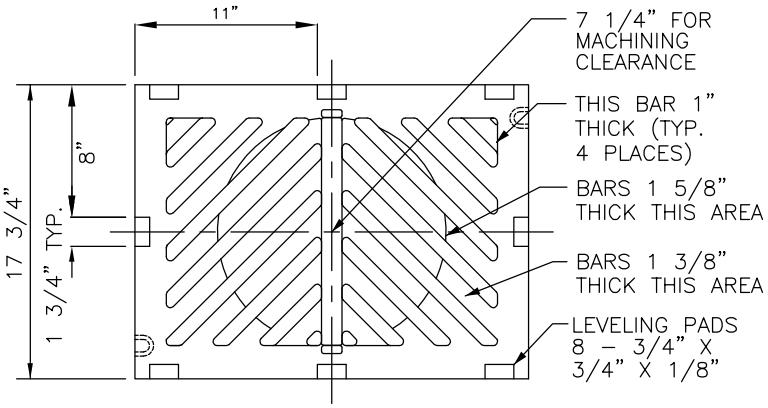

SIDE VIEW

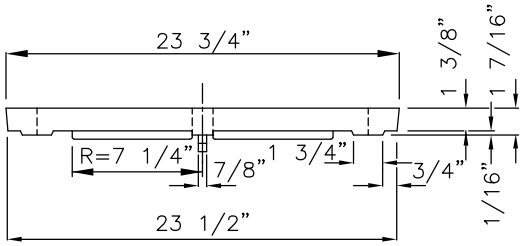

END VIEW

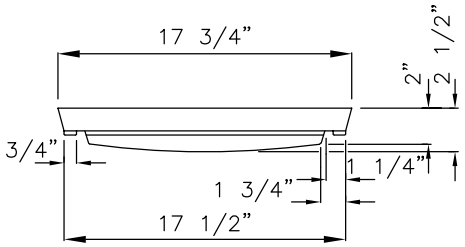

SLOT DETAIL

SEE NOTE 1

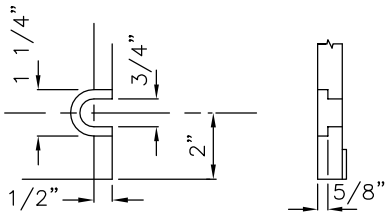

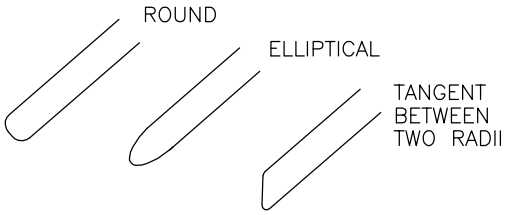

OPTIONAL DESIGN FOR GRATE OPENINGS ENDS

NOTES:

1. SLOT FORMED AND RECESSED FOR 5/8"–11 NC X 2 SOCKET HEAD (ALLEN HEAD) BOLT.
2. GRATE SHALL BE DUCTILE IRON.
3. SHALL CONFORM TO SEC. 9–05.15 OF THE STANDARD SPECIFICATIONS.
4. USE VANED GRATE IN CURB LINE.
5. USE FRAME SHOWN IN STANDARD DETAIL.

City of Bellevue

STORM AND SURFACE WATER UTILITY

TITLE

PARKING LOT/AREA GRATE

JANUARY 2017

NO SCALE

NO. D–7

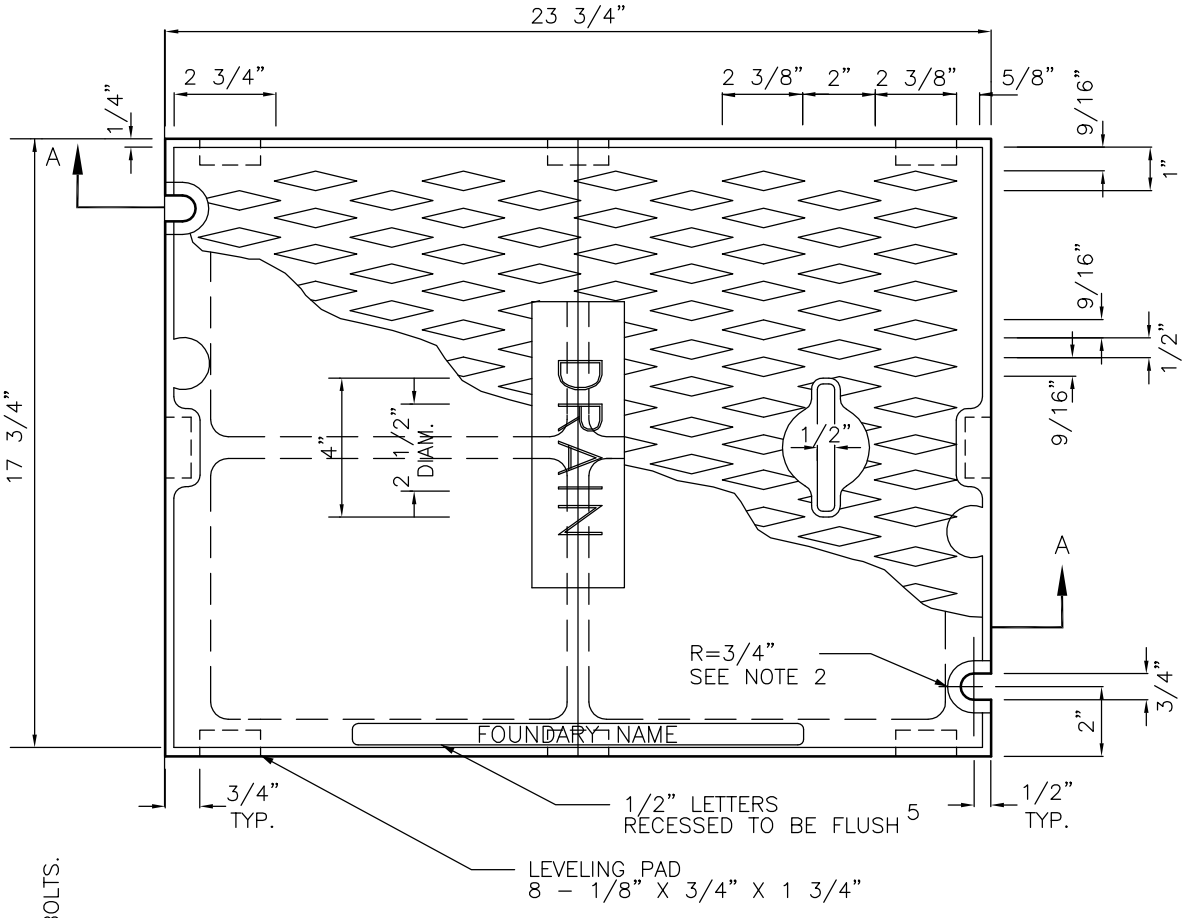

PLAN COVER

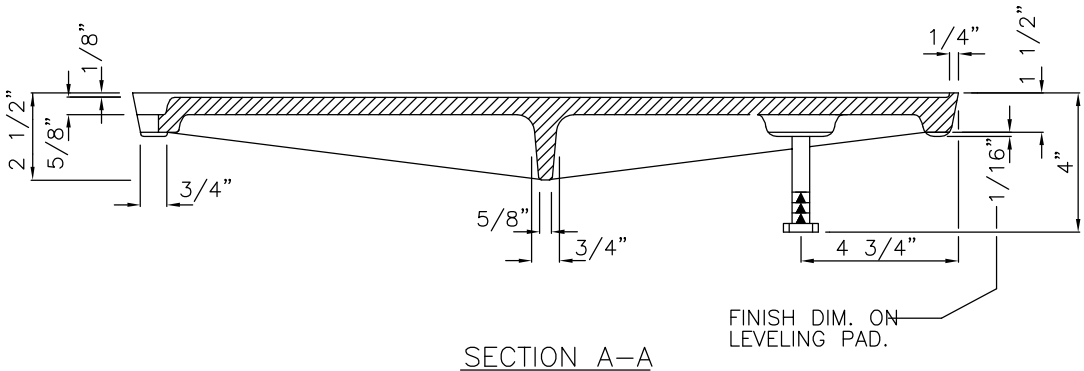

SECTION A–A

NOTES:

1. USE WITH FRAME DRILLED AND TAPPED FOR LOCKING BOLTS.
2. USE WITH TWO LOCKING BOLTS 5/8"–11 NC STAINLESS STEEL TYPE 304 STEEL SOCKET HEAD (ALLEN HEAD) BOLTS, 2" LONG.
3. COVER MATERIAL IS DUCTILE IRON.
4. SHALL CONFORM TO SEC. 7.05 OF THE STANDARD SPECIFICATIONS.
5. COVER SHALL HAVE THE WORD "DRAIN" IN 2–INCH RAISED LETTERS.

JANUARY 2017 NO SCALE

City of Bellevue

STORM AND SURFACE WATER UTILITY

TITLE

SOLID COVER

NO. D–8

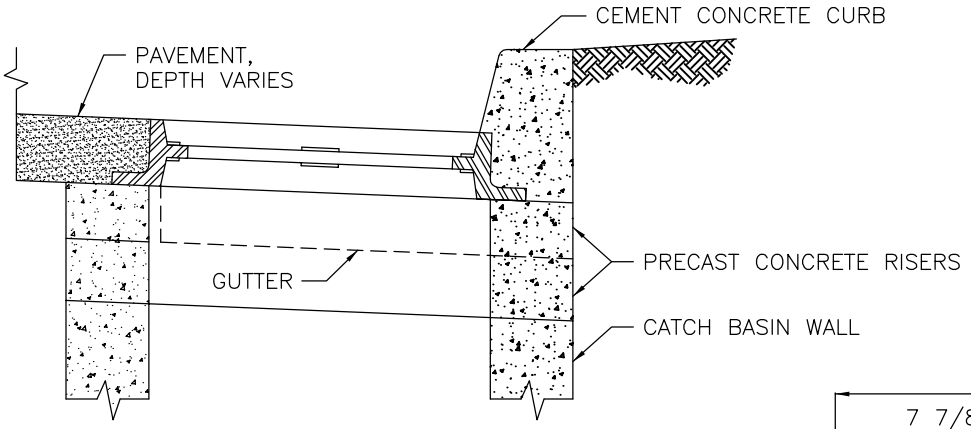

VERTICAL CURB

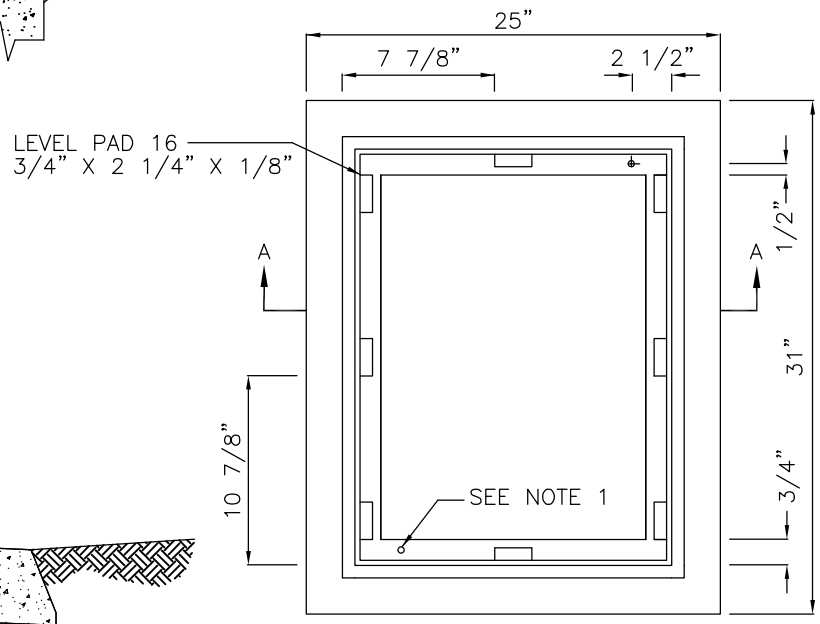

PLAN

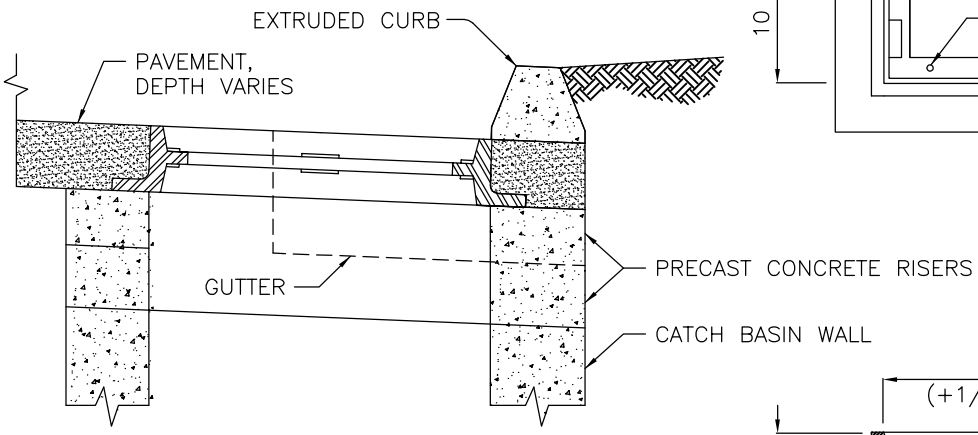

EXTRUDED CURB

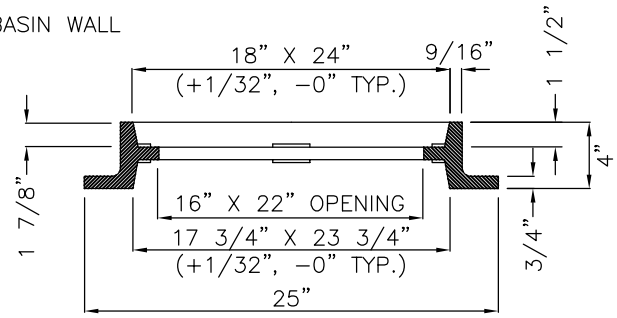

SECTION A–A

NOTES:

1. DRILL AND TAP FOR, AND PROVIDE, TWO LOCKING BOLTS 5/8"–11 NC STAINLESS TYPE 304 STEEL SOCKET HEAD (ALLEN HEAD) BOLTS, 2" LONG.
2. FRAME MATERIAL IS CAST IRON PER ASTM A48 CLASS 30 OR BETTER.
3. SET FRAME TO GRADE AND CONSTRUCT ROAD AND GUTTER TO BE FLUSH WITH FRAME.
4. MATCH CENTERLINE OF CATCH BASIN TO CURB LINE FOR TYPE 1 AND 1–L.

City of Bellevue

STORM AND SURFACE WATER UTILITY

TITLE

STANDARD FRAME INSTALLATION

JANUARY 2017

NO SCALE

NO. D–9

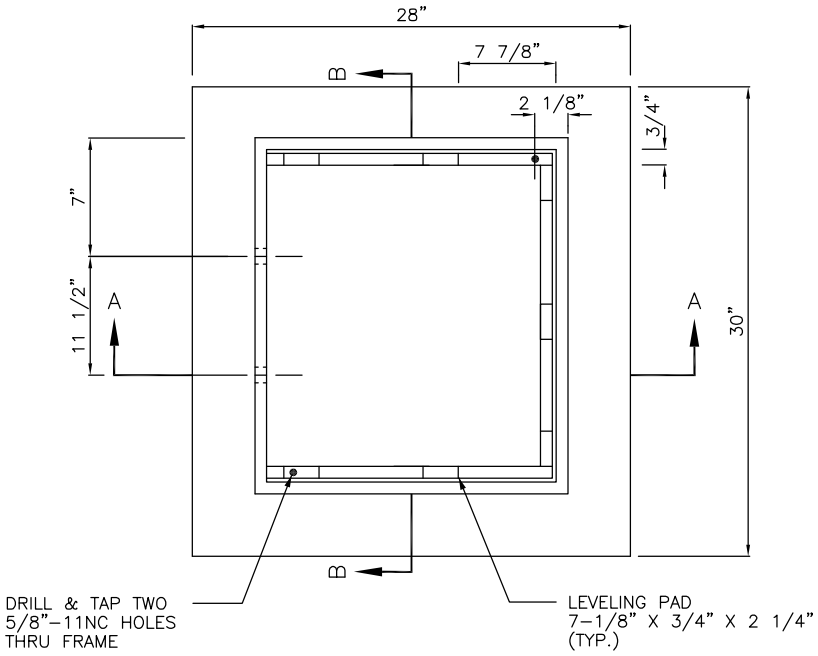

PLAN

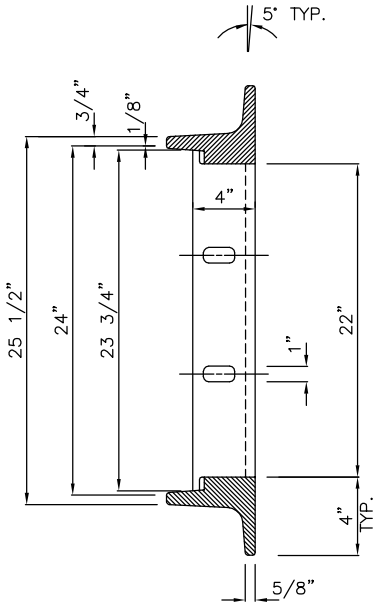

SECTION B–B

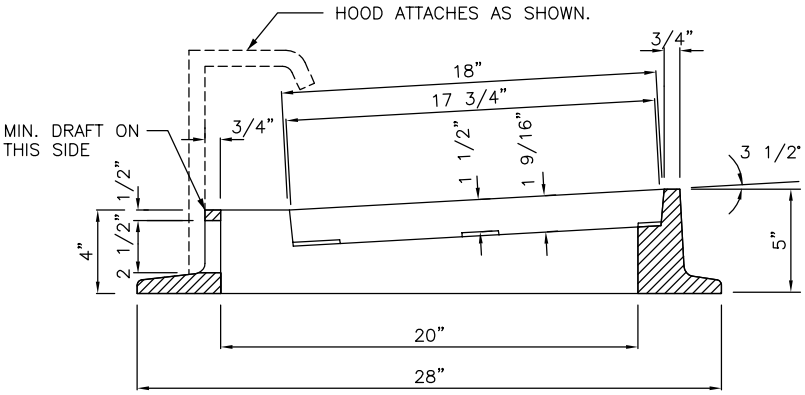

SECTION A–A

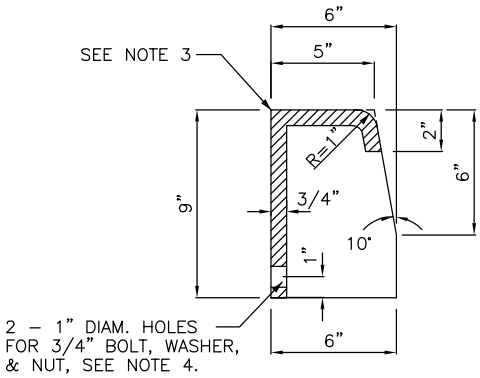

SECTION C–C

NOTES:

1. MATERIAL SHALL CONFORM TO SECTION 9–05.15(2) OF THE STANDARD SPECIFICATIONS.
2. PATTERN ON TOP SURFACE OF HOOD SHALL BE 3/16" NON–SKID DIAMOND.
3. BOLT, WASHER, AND NUT SHALL BE GALVANIZED OR CORROSION RESISTANT.
4. SEE DETAIL D–11 FOR INSTALLATION.

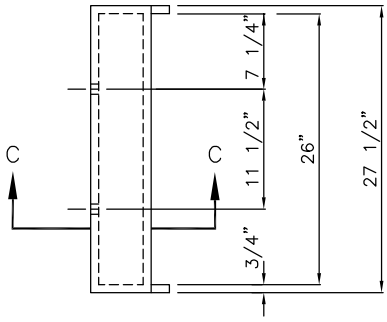

HOOD DETAIL

City of Bellevue

STORM AND SURFACE WATER UTILITY

TITLE

THROUGH–CURB INLET FRAME

NO. D–10

JANUARY 2017

NO SCALE

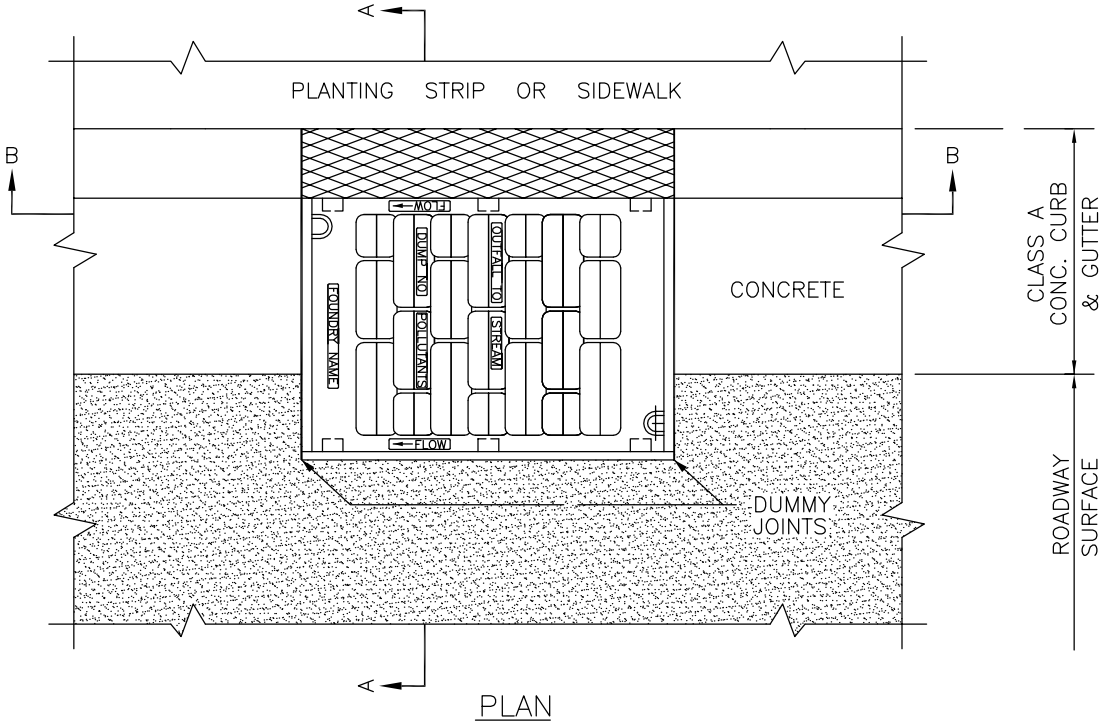

PLAN

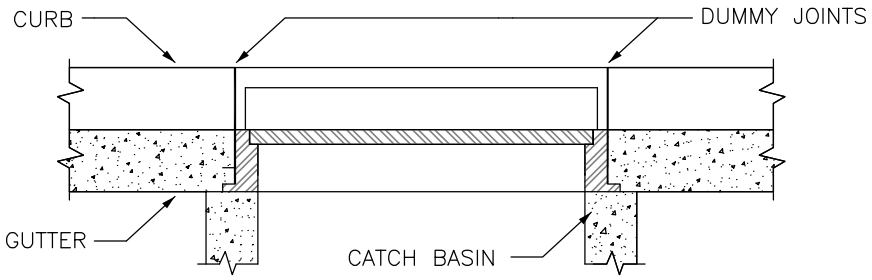

SECTION B–B

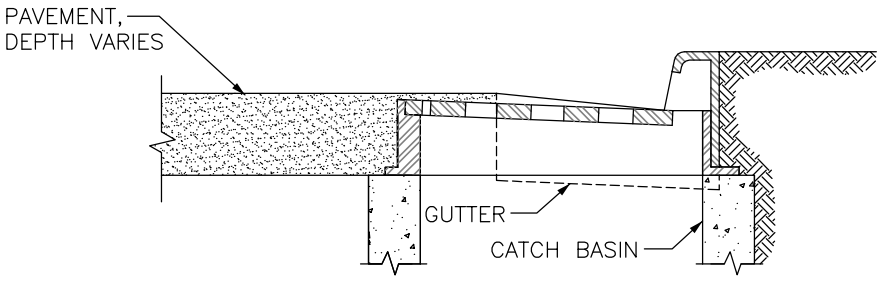

SECTION A–A

NOTES:

1. SET TO GRADE AND CONSTRUCT ROAD AND GUTTER TO BE FLUSH WITH FRAME.
2. HOOD SHALL MATCH TOP OF CURB ELEVATION.

City of Bellevue

STORM AND SURFACE WATER UTILITY

TITLE

THROUGH–CURB INLET FRAME INSTALLATION

JANUARY 2017

NO SCALE

NO. D–11

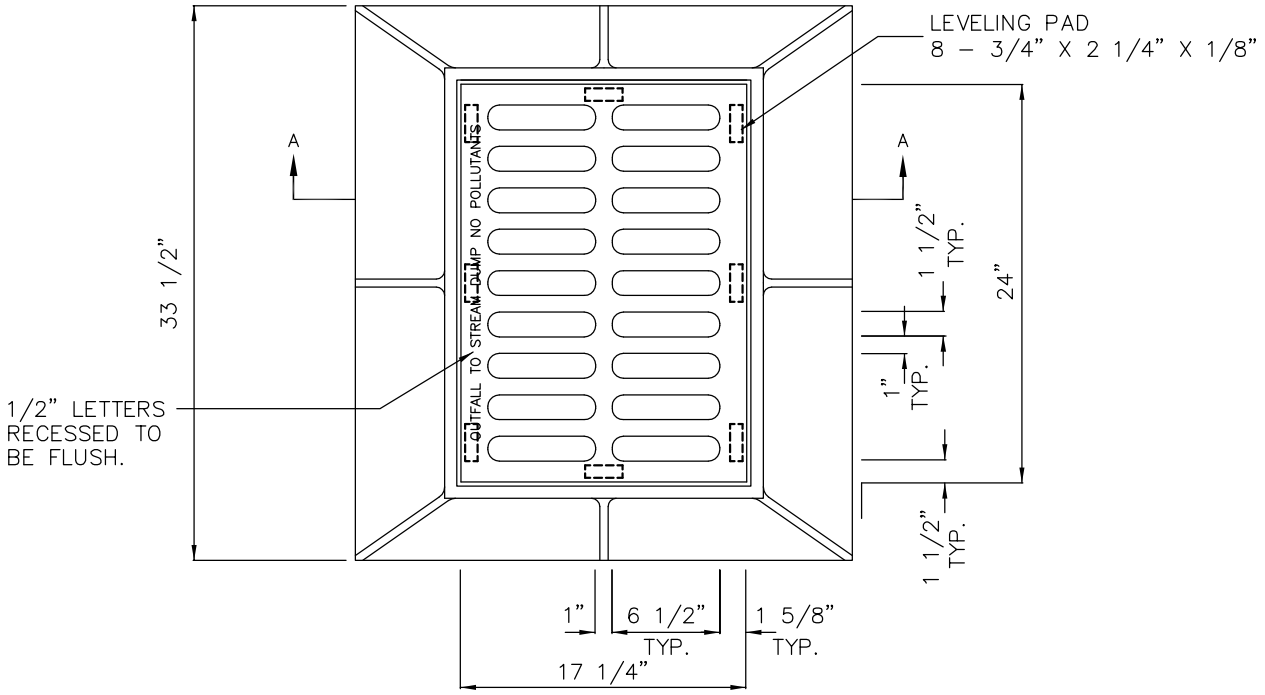

PLAN

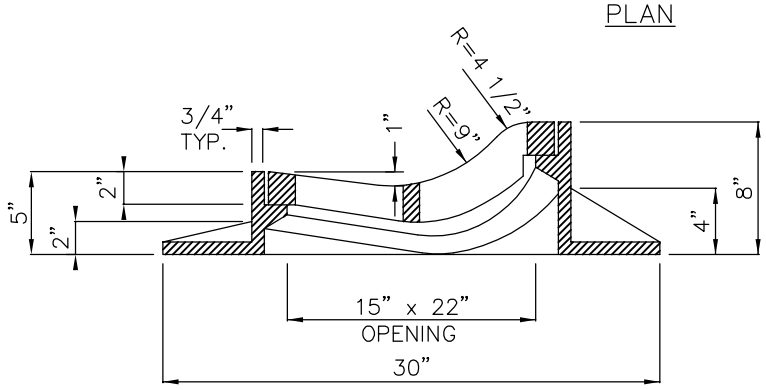

SECTION A–A

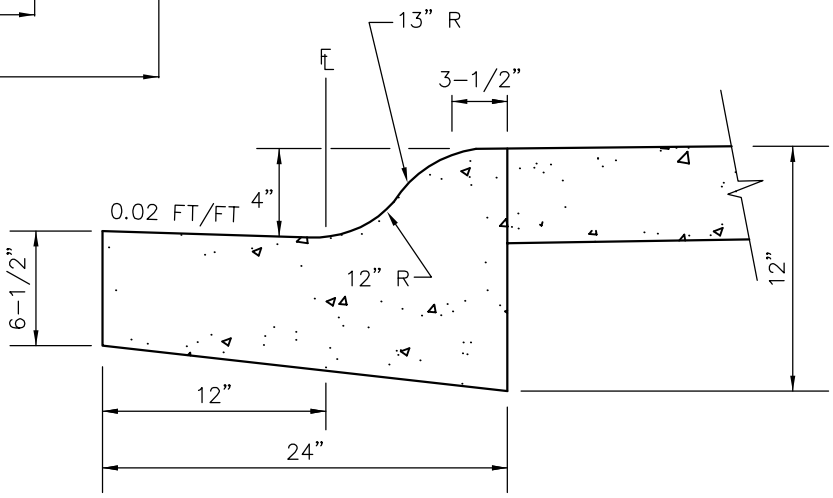

ROLLED CURB

NOTES:

1. FRAME MATERIAL IS CAST IRON ASTM A48 CLASS 30.

City of Bellevue

STORM AND SURFACE WATER UTILITY

TITLE

FRAME & GRATE FOR EXISTING ROLLED CURB

JANUARY 2017

NO SCALE

NO. D–12

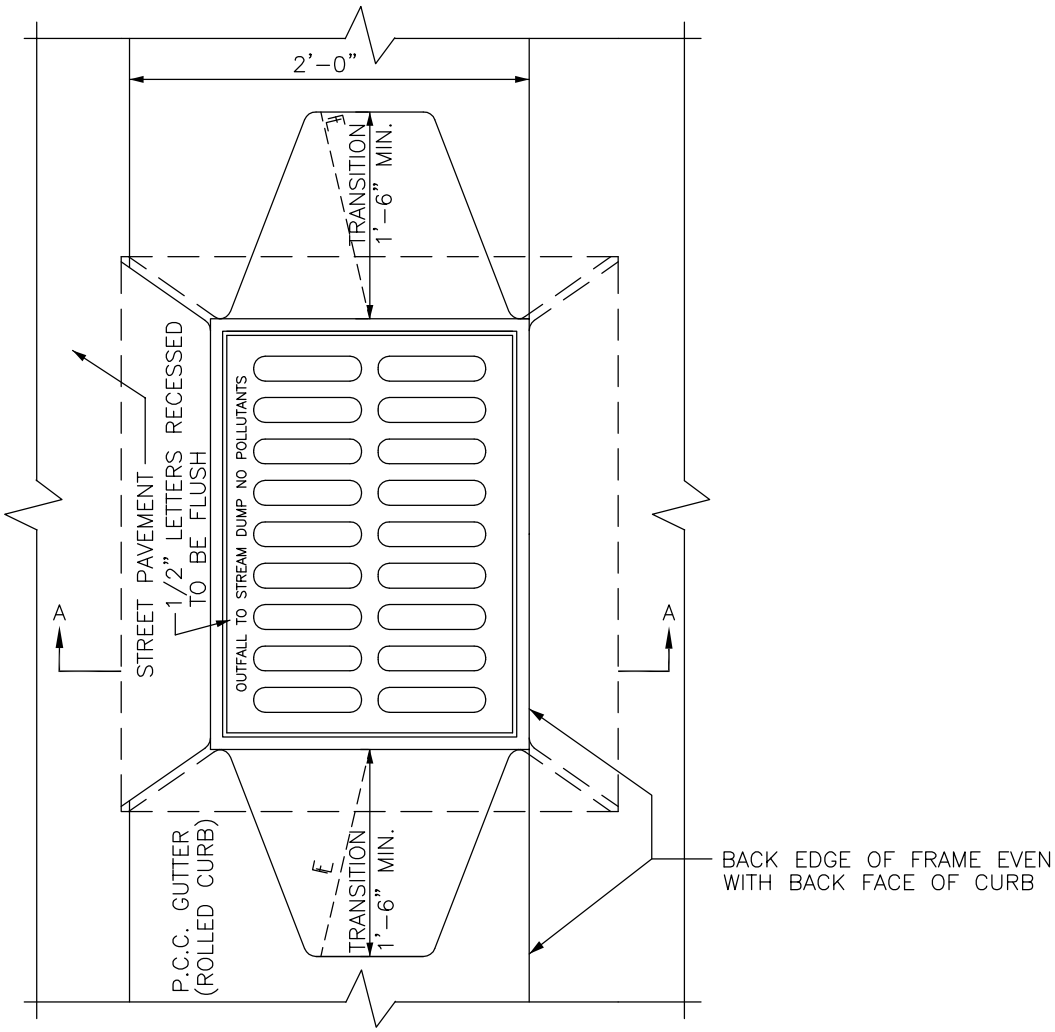

PLAN

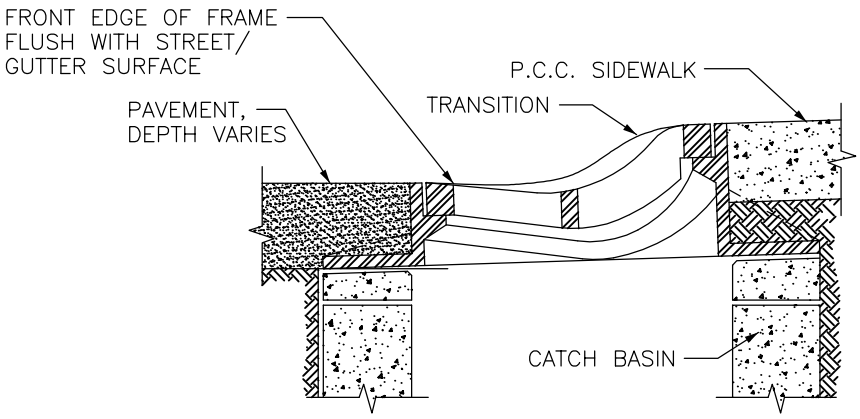

SECTION A–A

NOTES:

1. SET FRAME TO GRADE AND CONSTRUCT ROAD AND CURB TO BE FLUSH AT FRONT AND BACK OF FRAME.

City of Bellevue

STORM AND SURFACE WATER UTILITY

TITLE

EXISTING ROLLED CURB
FRAME & GRATE INSTALLATION

JANUARY 2017

NO SCALE

NO. D–13

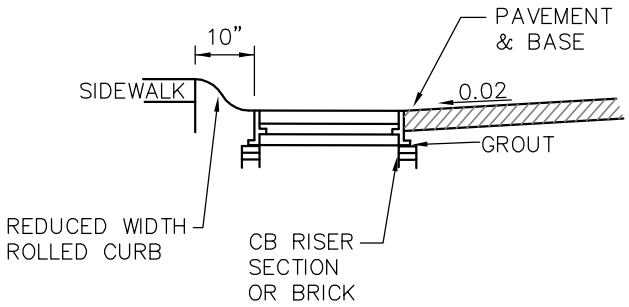

ELEVATION A–A

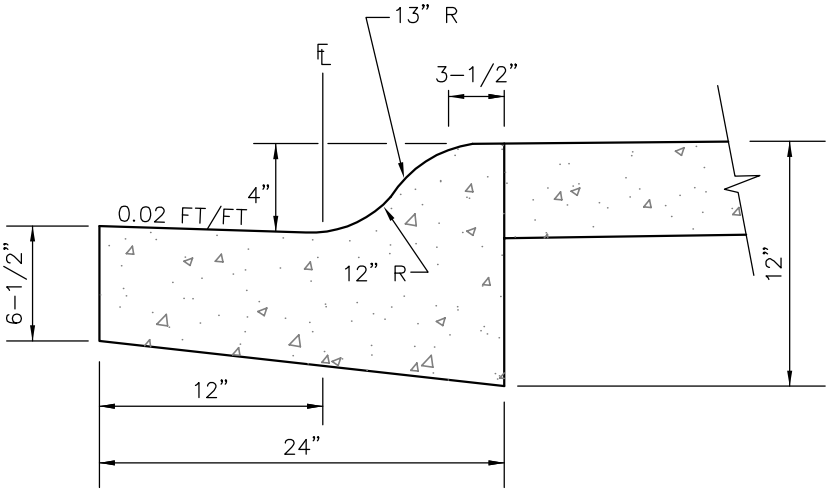

ELEVATION B–B

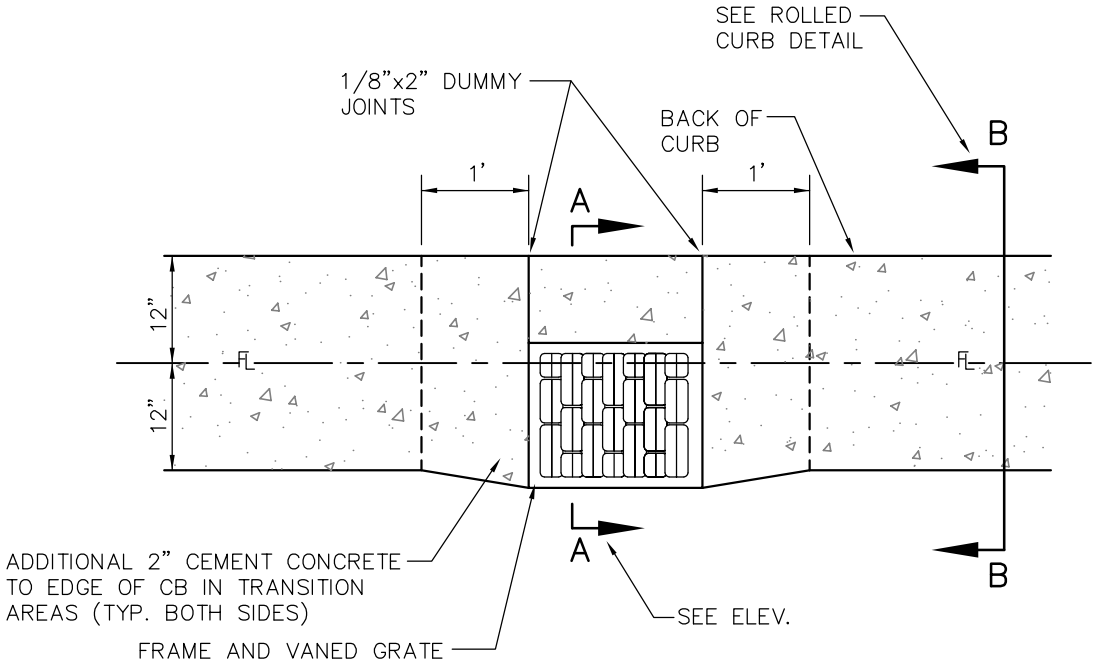

NOTES:

1. WHEN A THRU–CURB INLET IS REQUIRED, USE A ROLLED CURB FRAME AND GRATE.

City of Bellevue

STORM AND SURFACE WATER UTILITY

TITLE

GRATE FOR EXISTING ROLLED CURB INSTALLATION

JANUARY 2017

NO SCALE

NO. D–14

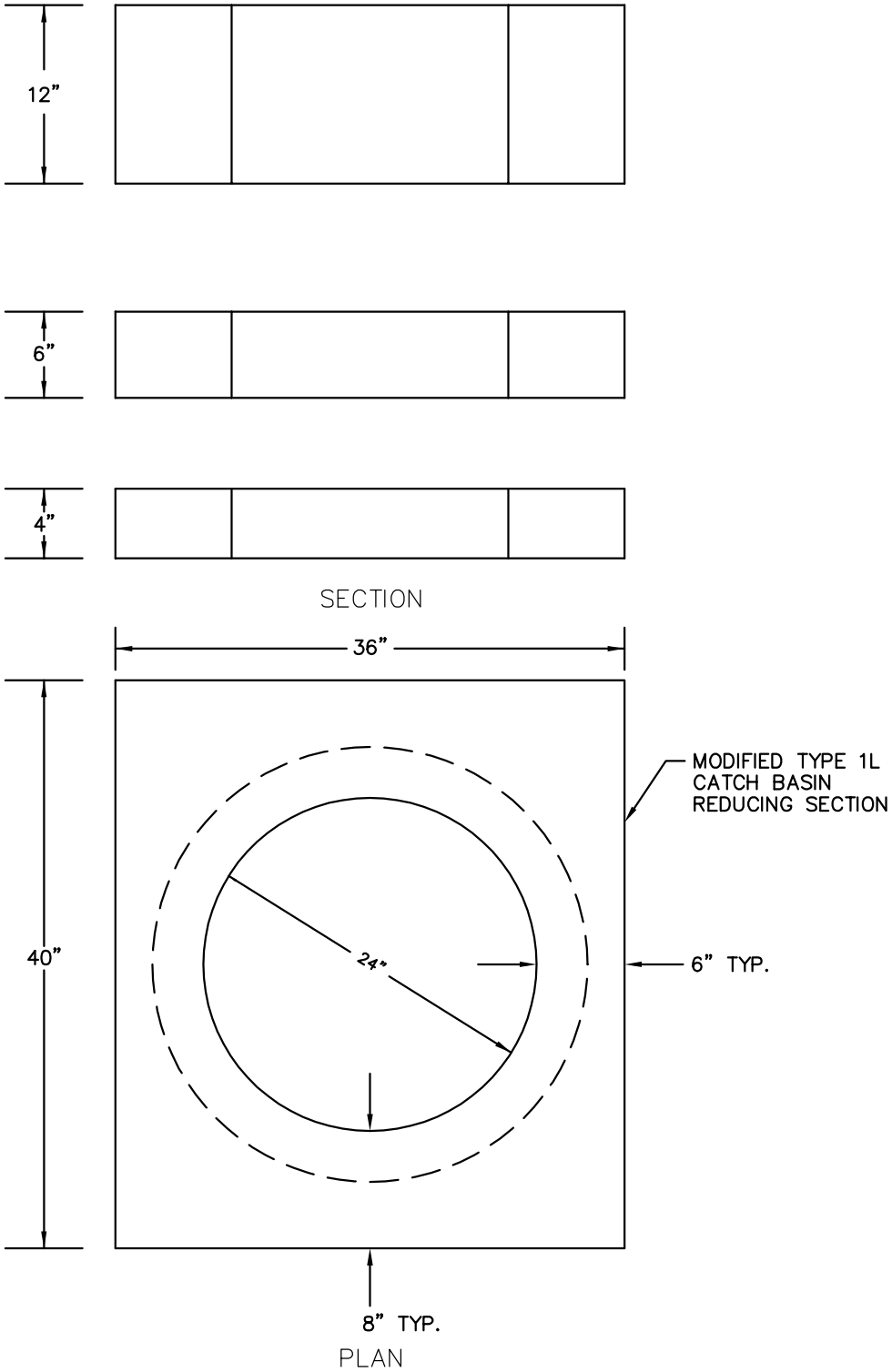

NOTES:

1. ITEMS SHOWN SHALL BE PRE-CAST,
2. APPLY NON-SHRINK GROUT TO INSIDE AND OUTSIDE OF ALL JOINTS, RISERS, RINGS AND FRAMES.

JANUARY 2017 NO SCALE

City of Bellevue

STORM AND SURFACE WATER UTILITY

TITLE

CONVERSION RISER FOR CATCH BASIN TYPE 1-L

NO. D-15

OUTLET PIPE DIAMETER	AREA INLET DIAMETER "I.D."	AVERAGE CONCRETE PIPE (lbs.)	NYLOPLAST AREA INLET (lbs.)
4"	12"	450	33
6"	12"	450	33
8"	18"	650	64

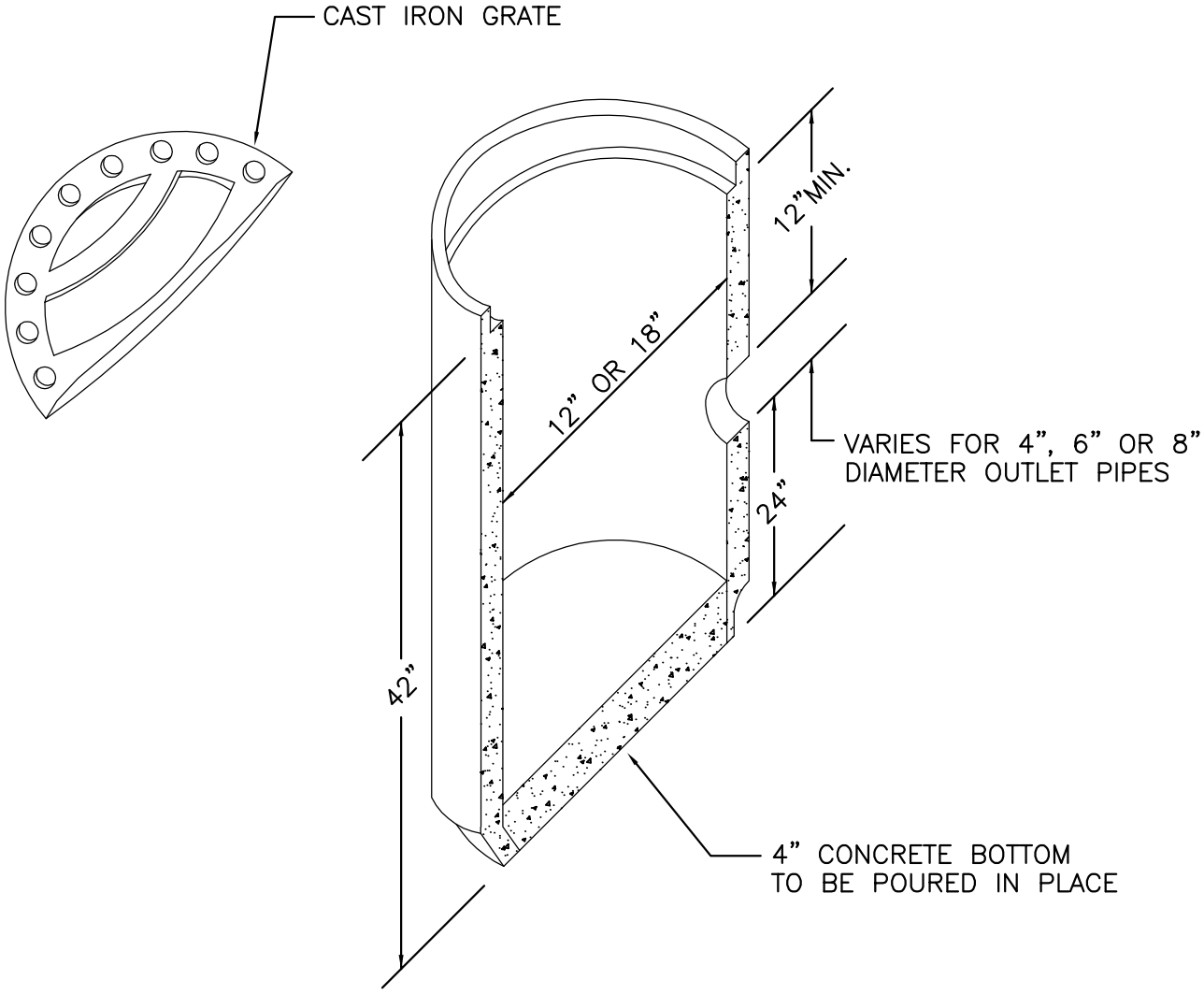

NOTES:

1. FOR USE IN NON-TRAFFIC AREAS ONLY
2. AREA INLET EITHER CONCRETE AS SHOWN, OR PVC STRUCTURE WITH DUCTILE IRON GRATE AS MANUFACTURED BY NYLOPLAST.

City of Bellevue

SURFACE WATER UTILITY

TITLE

AREA INLET

JANUARY 2017

NO SCALE

NO. D-16

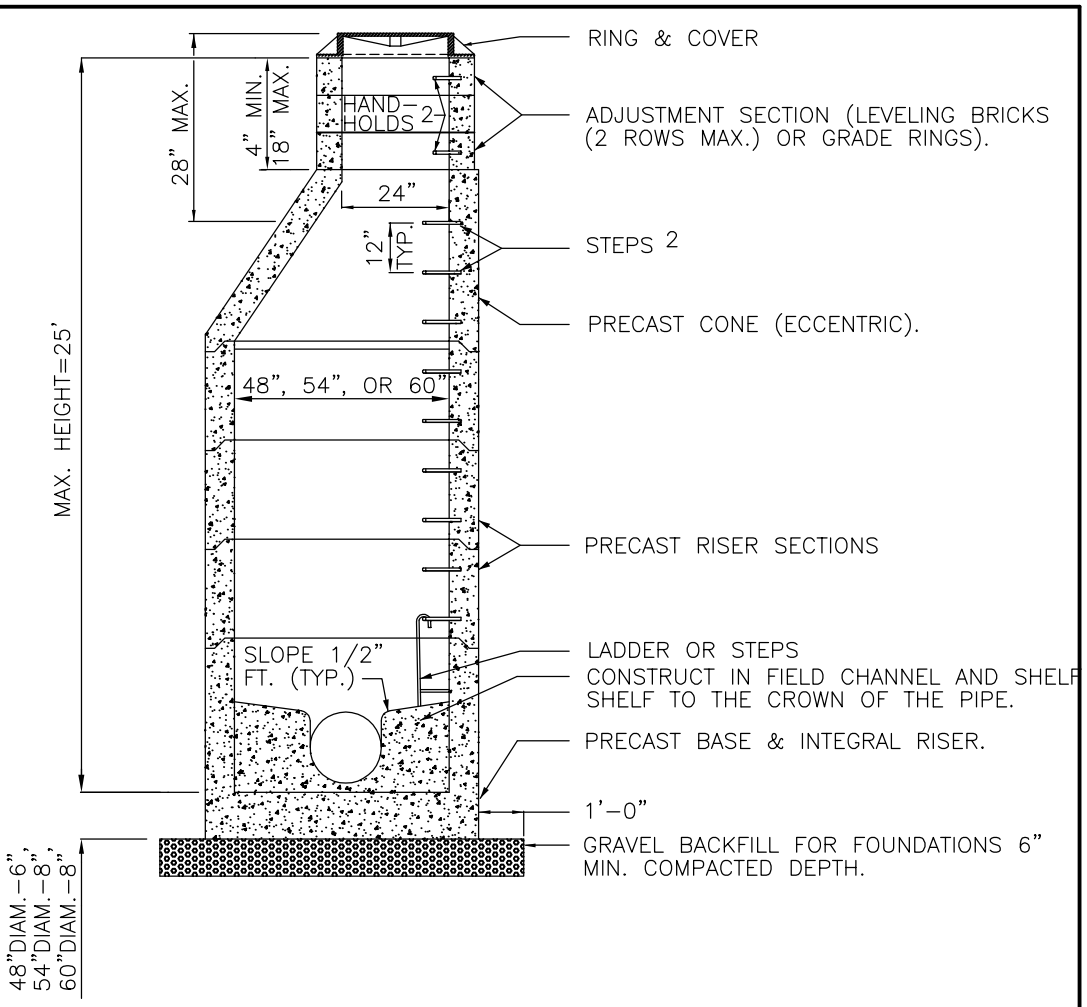

NOTES:

1. MANHOLES SHALL BE CONSTRUCTED IN ACCORDANCE WITH AASHTO M199 UNLESS OTHERWISE SHOWN ON PLANS OR NOTED IN THE STANDARD SPECIFICATIONS.
2. HANDHOLDS IN ADJUSTMENT SECTION SHALL HAVE 3" MIN. CLEARANCE. STEPS IN MANHOLE SHALL HAVE 6" MIN. CLEARANCE. SEE STD. DTL. D-15, "MANHOLE DETAILS." MANHOLDS SHALL BE PLACED IN ALTERNATING GRADE RINGS OR LEVELING BRICK COURSE WITH A MIN. OF ONE HAND HOLD BETWEEN THE LAST STEP AND THE TOP OF THE MANHOLE.
3. ALL PRECAST CONCRETE SHALL BE CLASS 4000. NON-REINFORCED CONCRETE IN CHANNEL AND SHELF SHALL BE CLASS 3000.
4. PRECAST BASES SHALL BE FURNISHED WITH CUTOUTS OR KNOCKOUTS. KNOCKOUTS SHALL HAVE WALL THICKNESS OF 2" MIN. UNUSED KNOCKOUTS NEED NOT BE GROUTED IF WALL IS LEFT INTACT. PIPES SHALL BE INSTALLED ONLY IN FACTORY KNOCKOUTS UNLESS OTHERWISE APPROVED BY THE ENGINEER.
5. KNOCKOUT OR CUTOUT HOLE SIZE SHALL EQUAL PIPE OUTER DIAM. PLUS MANHOLE WALL THICKNESS. MAX. HOLE SIZE BE 36" FOR 48" MANHOLE, 42" FOR 54" MANHOLE, 48" FOR 60" M.H. MIN. DISTANCE BETWEEN HOLES SHALL BE 8",
6. MANHOLE RINGS AND COVERS SHALL BE IN ACCORDANCE WITH SEC. 7.05 OF THE STANDARD SPECIFICATIONS. MATING SURFACES SHALL BE FINISHED TO ASSURE NON-ROCKING FIT WITH ANY COVER POSITION.
7. FOR HEIGHTS OF 12' OR LESS, MIN. SOIL BEARING VALUE SHALL EQUAL 3,300 POUNDS PER SQUARE FOOT. FOR HEIGHTS OVER 12" MIN. SOIL BEARING VALUE SHALL EQUAL 3,800 POUNDS PER SQUARE FOOT.
8. FOR DETAILS SHOWING LADDER, STEPS, HANDHOLDS AND TOP SLABS, SEE STD. DTL. D-5.
9. SEE THE STANDARD SPECIFICATIONS SEC. 7-05.3 FOR JOINT REQUIREMENTS.
10. APPLY NON-SHRINK GROUT TO INSIDE AND OUTSIDE OF ALL JOINTS, RISERS, RINGS AND FRAMES.

City of Bellevue

STORM AND SURFACE WATER UTILITY

TITLE

MANHOLE TYPE 1
48", 54", & 60"

JANUARY 2017

NO SCALE

NO. D-17

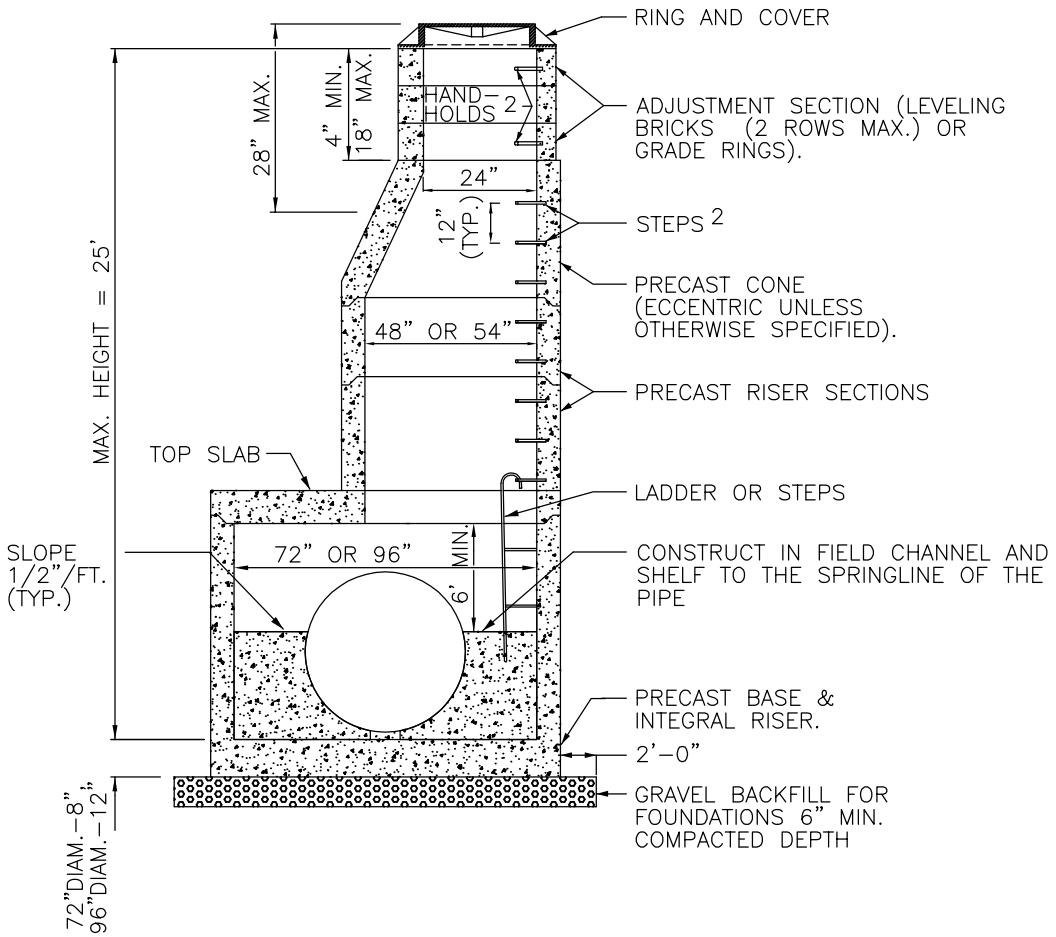

NOTES:

1. MANHOLES SHALL BE CONSTRUCTED IN ACCORDANCE WITH AASHTO M199 UNLESS OTHERWISE SHOWN ON PLANS OR NOTED IN THE STANDARD SPECIFICATIONS.
2. HANDHOLDS IN ADJUSTMENT SECTION SHALL HAVE 3" MIN. CLEARANCE. STEPS IN MANHOLE SHALL HAVE 6" MIN. CLEARANCE. SEE STD. DTL. D-15, "MANHOLE DETAILS." MANHOLDS SHALL BE PLACED IN ALTERNATING GRADE RINGS OR LEVELING BRICK COURSE WITH A MIN. OF ONE HANDHOLD BETWEEN THE LAST STEP AND THE TOP OF THE MANHOLE.
3. NON-REINFORCED CONCRETE IN CHANNEL AND SHELF SHALL BE CLASS 3000. ALL PRECAST CONCRETE SHALL BE CLASS 4000.
4. PRECAST BASES SHALL BE FURNISHED WITH CUTOUTS OR KNOCKOUTS. KNOCKOUTS SHALL HAVE WALL THICKNESS OF 2" MIN. UNUSED KNOCKOUTS NEED NOT BE GROUTED IF WALL IS LEFT INTACT. PIPES SHALL BE INSTALLED ONLY IN FACTORY KNOCKOUTS UNLESS OTHERWISE APPROVED BY THE ENGINEER.
5. KNOCKOUT OR CUTOUT HOLE SIZE SHALL EQUAL PIPE OUTER DIAM. PLUS MANHOLE WALL THICKNESS. MAX. HOLE SIZE BE 60" FOR 72" MANHOLE, 84" FOR 96" MANHOLE. MIN. DISTANCE BETWEEN HOLES SHALL BE 12".
6. MANHOLE RINGS AND COVERS SHALL BE IN ACCORDANCE WITH SEC. 7.05 OF THE STANDARD SPECIFICATIONS. MATING SURFACES SHALL BE FINISHED TO ASSURE NON-ROCKING FIT WITH ANY COVER POSITION.
7. FOR HEIGHTS OF 12' OR LESS, MIN. SOIL BEARING VALUE SHALL EQUAL 3,300 POUNDS PER SQUARE FOOT. FOR HEIGHTS OVER 12" MIN. SOIL BEARING VALUE SHALL EQUAL 3,800 POUNDS PER SQUARE FOOT.
8. FOR DETAILS SHOWING GRADE RING, LADDER, STEPS, HANDHOLDS, AND TOP SLABS, SEE STD. DTL. D-5.
9. SEE THE STANDARD SPECIFICATIONS SEC. 7-05.3 FOR JOINT REQUIREMENTS.
10. APPLY NON-SHRINK GROUT TO INSIDE AND OUTSIDE OF ALL JOINTS, RISERS, RINGS AND FRAMES.

JANUARY 2017 NO SCALE

City of Bellevue

STORM AND SURFACE WATER UTILITY

TITLE

MANHOLE TYPE 2
72" & 96"

NO. D-18

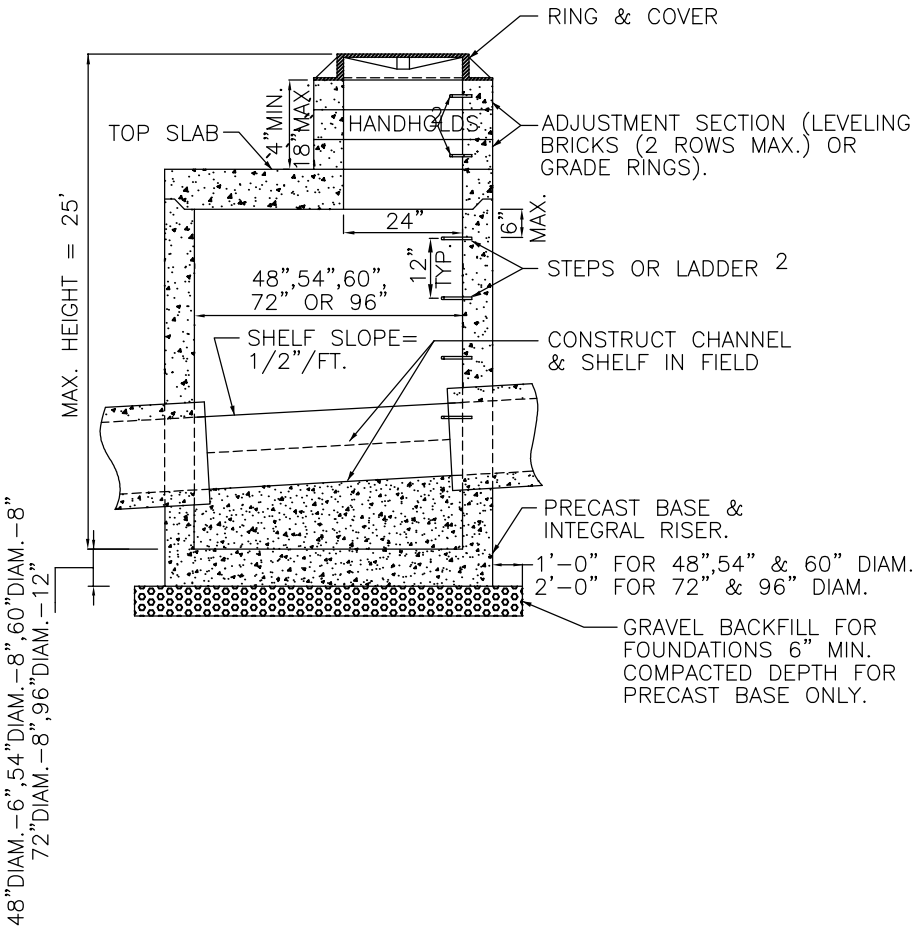

NOTES:

1. MANHOLES SHALL BE CONSTRUCTED IN ACCORDANCE WITH AASHTO M199 UNLESS OTHERWISE SHOWN ON PLANS OR NOTED IN THE STANDARD SPECIFICATIONS.
2. HANDHOLDS IN ADJUSTMENT SECTION SHALL HAVE 3" MIN. CLEARANCE. STEPS IN MANHOLE SHALL HAVE 6" MIN. CLEARANCE. SEE STD. DTL. D-15, "MANHOLE DETAILS." MANHOLDS SHALL BE PLACED IN ALTERNATING GRADE RINGS OR LEVELING BRICK COURSE WITH A MIN. OF ONE HAND HOLD BETWEEN THE LAST STEP AND THE TOP OF THE MANHOLE.
3. NON-REINFORCED CONCRETE IN CHANNEL AND SHELF SHALL BE CLASS 3000. ALL PRECAST CONCRETE SHALL BE CLASS 4000.
4. PRECAST BASES SHALL BE FURNISHED WITH CUTOUTS OR KNOCKOUTS. KNOCKOUTS SHALL HAVE WALL THICKNESS OF 2" MIN. UNUSED KNOCKOUTS NEED NOT BE GROUTED IF WALL IS LEFT INTACT. PIPES SHALL BE INSTALLED ONLY IN FACTORY KNOCKOUTS UNLESS OTHERWISE APPROVED BY THE ENGINEER.
5. KNOCKOUT OR CUTOUT HOLE SIZE SHALL EQUAL PIPE OUTER DIAM. PLUS MANHOLE WALL THICKNESS. MAX. HOLE SIZE BE 60" FOR 72" MANHOLE, 84" FOR 96" MANHOLE, MIN. DISTANCE BETWEEN HOLES SHALL BE 12".
6. MANHOLE RINGS AND COVERS SHALL BE IN ACCORDANCE WITH SEC. 7.05 OF THE STANDARD SPECIFICATIONS. MATING SURFACES SHALL BE FINISHED TO ASSURE NON-ROCKING FIT WITH ANY COVER POSITION.
7. FOR HEIGHTS OF 12' OR LESS, MIN. SOIL BEARING VALUE SHALL EQUAL 3,300 POUNDS PER SQUARE FOOT. FOR HEIGHTS OVER 12" MIN. SOIL BEARING VALUE SHALL EQUAL 3,800 POUNDS PER SQUARE FOOT.
8. FOR DETAILS SHOWING LADDER, STEPS, HANDHOLDS, AND TOP SLABS, SEE STD. DTL. D-5.
9. SEE THE STANDARD SPECIFICATIONS SEC. 7-05.3 FOR JOINT REQUIREMENTS.
10. APPLY NON-SHRINK GROUT TO INSIDE AND OUTSIDE OF ALL JOINTS, RINGS, RISERS AND FRAMES.

JANUARY 2017 NO SCALE

City of Bellevue

STORM AND SURFACE WATER UTILITY

TITLE

MANHOLE TYPE 3
48", 54", 60", 72" & 96"

NO. D-19

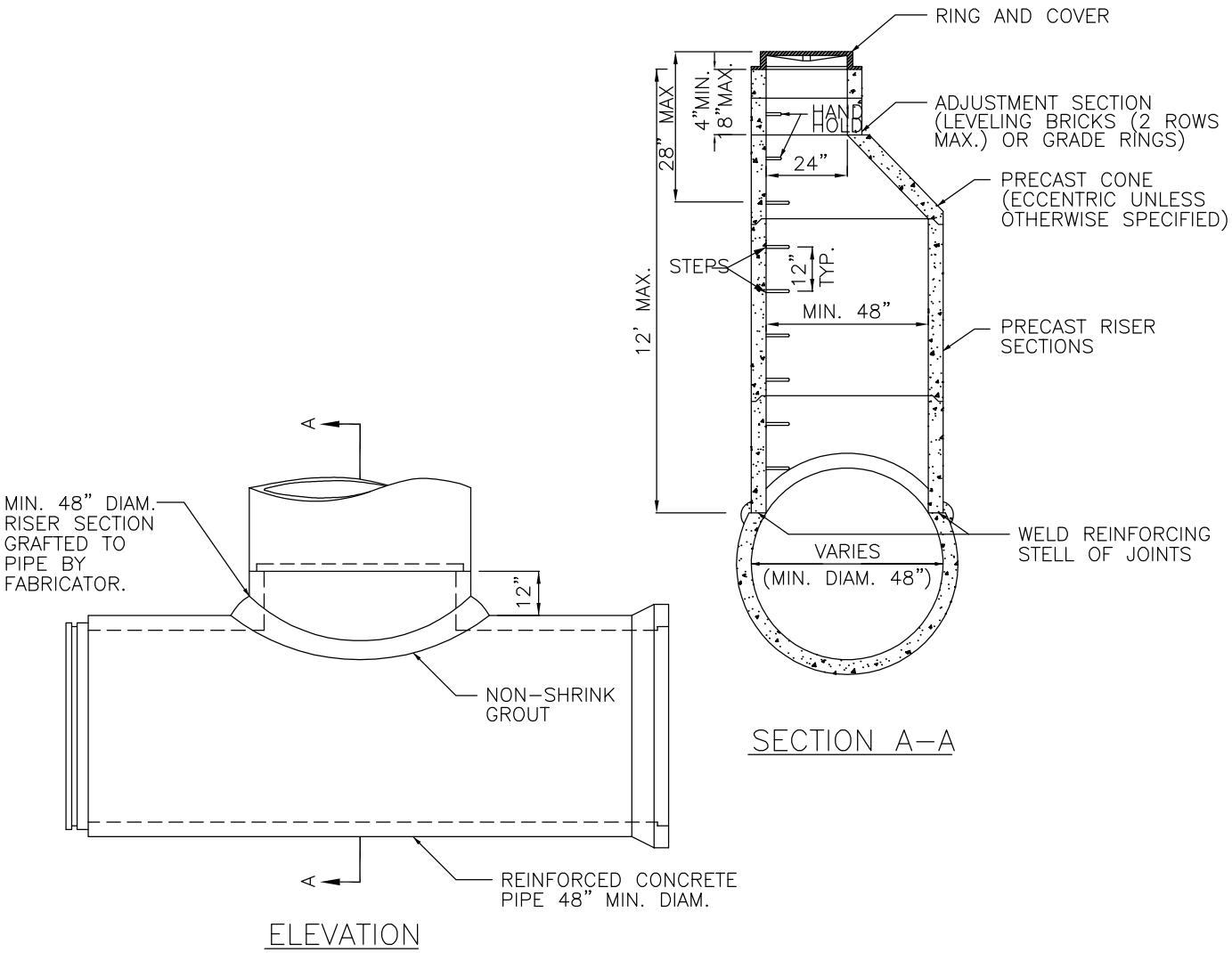

NOTES:

1. MANHOLES SHALL BE CONSTRUCTED IN ACCORDANCE WITH AASHTO M199 UNLESS OTHERWISE SHOWN ON PLANS OR NOTED IN THE STANDARD SPECIFICATIONS.
2. HANDHOLDS IN ADJUSTMENT SECTION SHALL HAVE 3" MIN. CLEARANCE. STEPS IN MANHOLE SHALL HAVE 6" MIN. CLEARANCE. SEE STD. DTL. D–5.
3. MANHOLE RINGS AND COVERS SHALL BE IN ACCORDANCE WITH SEC. 7.05 OF THE STANDARD SPECIFICATIONS. MATING SURFACES SHALL BE FINISHED TO ASSURE NON–ROCKING FIT WITH ANY COVER POSITION. SHALL BE FINISHED TO ASSURE NON–ROCKING FIT WITH ANY
4. ALL PRECAST CONCRETE SHALL BE CLASS 4000.
5. FOR DETAILS SHOWING, LADDER, STEPS, HANDHOLDS, AND TOP SLABS, SEE STD. DTL. D–5.
6. NOT FOR USE IN TRAFFIC BEARING AREAS.
7. MANHOLE DIAMETER SHALL EQUAL PIPE DIAMETER.
8. FOR REINFORCED CONCRETE PIPE ONLY.
9. APPLY NON–SHRINK GROUT TO INSIDE AND OUTSIDE OF ALL JOINTS, RISERS, RINGS AND FRAMES.

City of Bellevue

STORM AND SURFACE WATER UTILITY

TITLE

MANHOLE TYPE 4

JANUARY 2017

NO SCALE

NO. D–20

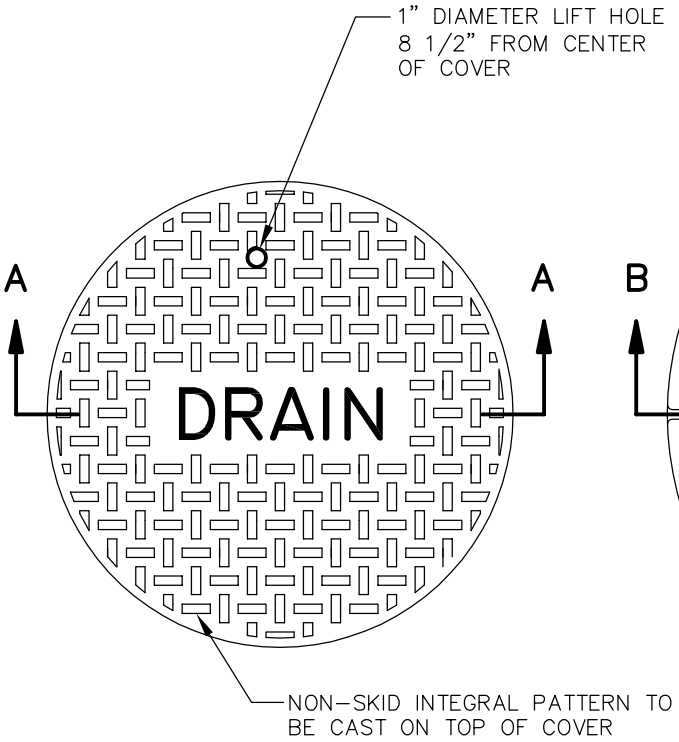

COVER PLAN

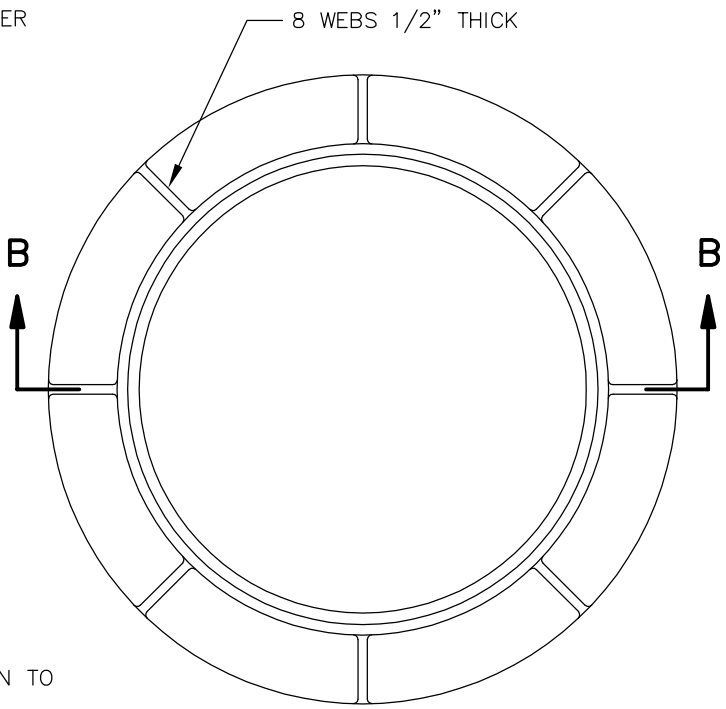

RING PLAN

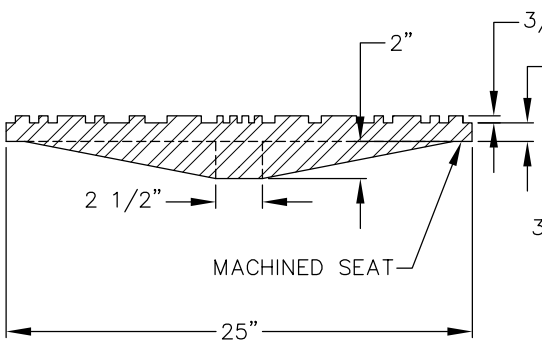

SECTION A–A

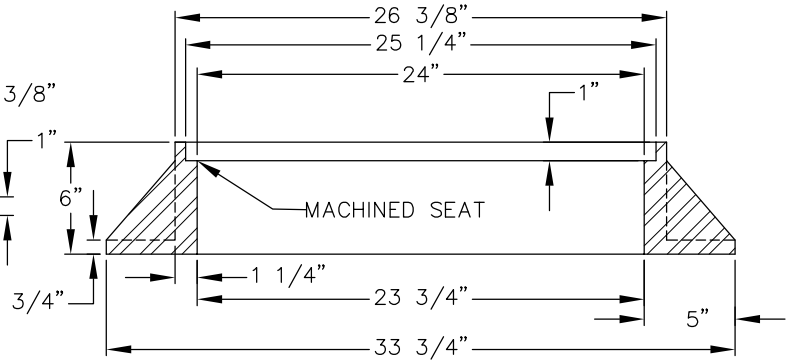

SECTION B–B

NOTES:

1. COVER SHALL HAVE THE WORD "DRAIN" CAST IN 3" RAISED LETTERS.
2. ONLY FOR USE IN PUBLIC RIGHT–OF–WAY (PAVED AREAS AND SIDEWALKS).
3. RING AND COVER SHALL BE RATED HS–20.
4. RING AND COVER MATERIAL IS DUCTILE IRON, ASTM A536 – GRADE 80–55–06 OR CAST IRON, ASTM A–48, CLASS 30.
5. OLYMPIC FOUNDRY MH30A, OR EQUAL.
6. DUCTILE OR CAST COVER SHALL HAVE MINIMUM WEIGHT OF 150 LBS.
7. DUCTILE OR CAST RING SHALL HAVE MINIMUM WEIGHT OF 210 LBS.

City of Bellevue

STORM AND SURFACE WATER UTILITY

TITLE

24" MANHOLE RING AND COVER

JANUARY 2017

NO SCALE

NO. D–21

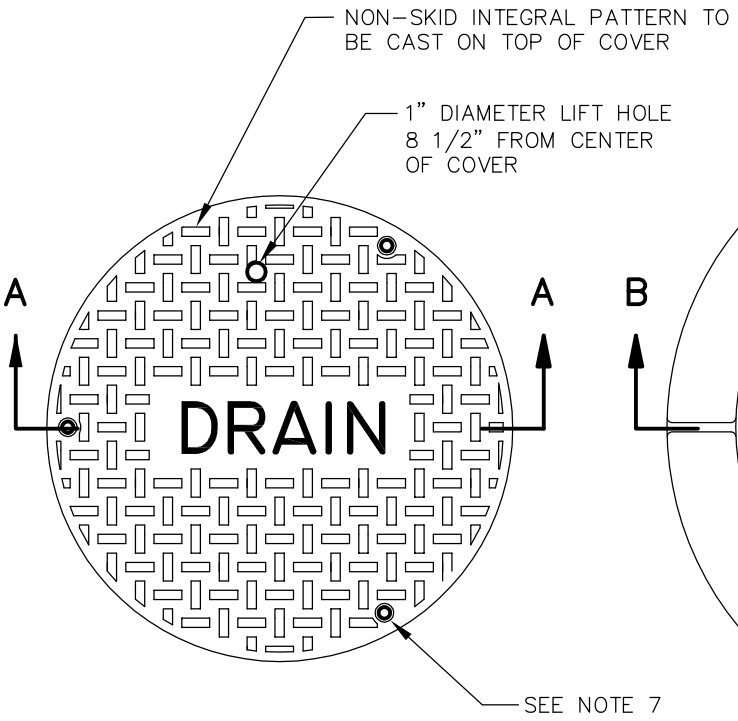

COVER PLAN

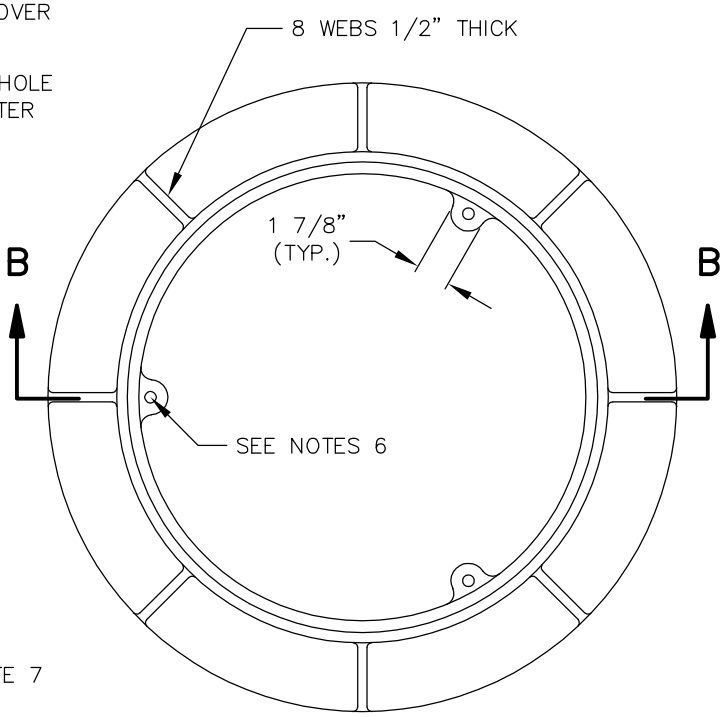

RING PLAN

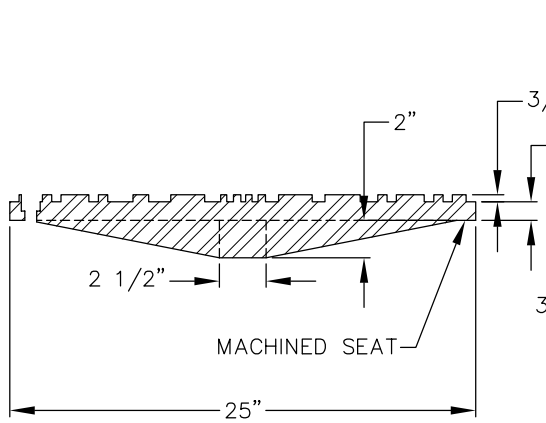

SECTION A–A

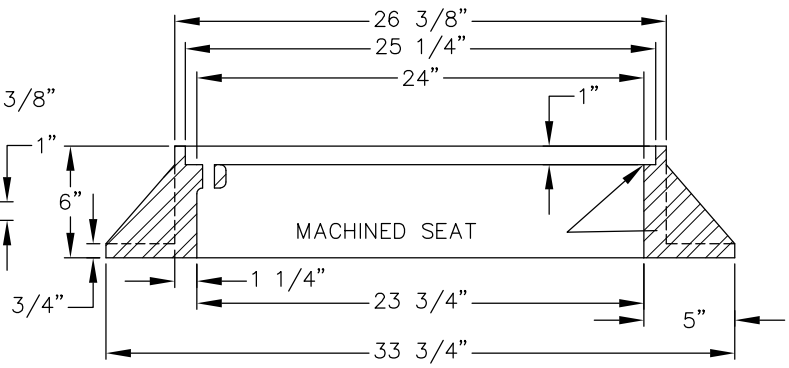

SECTION B–B

NOTES:

1. COVER SHALL HAVE THE WORD "DRAIN" CAST IN 3" RAISED LETTERS.
2. (NOT USED).
3. RING AND COVER MATERIAL: DUCTILE IRON ASTM A536–GRADE 80–55–06 OR CAST IRON ASTM A48–CLASS 30.
4. DUCTILE OR CAST COVER SHALL HAVE MINIMUM WEIGHT OF 150 LBS.
5. DUCTILE OR CAST RING SHALL HAVE MINIMUM WEIGHT OF 210 LBS.
6. RING SHALL HAVE THREE 5/8"–11 N.C. TAPPED HOLES AT 120 DEGREES.
7. COVER SHALL HAVE THREE COUNTERSUNK 5/8"–11 N.C THROUGH HOLES AT 120 DEGREES TO MATCH RING.
8. LOCKING BOLTS SHALL BE 5/8"–11 N.C. X 2" 304 STAINLESS STEEL SOCKET (ALLEN) HEAD.
9. OLYMPIC FOUNDRY MH30AD/T, OR EQUAL.
10. RING AND COVER SHALL BE RATED H–20.

City of Bellevue

STORM AND SURFACE WATER UTILITY

TITLE

24" BOLT–LOCKING MANHOLE RING AND COVER

JANUARY 2017

NO SCALE

NO. D–22

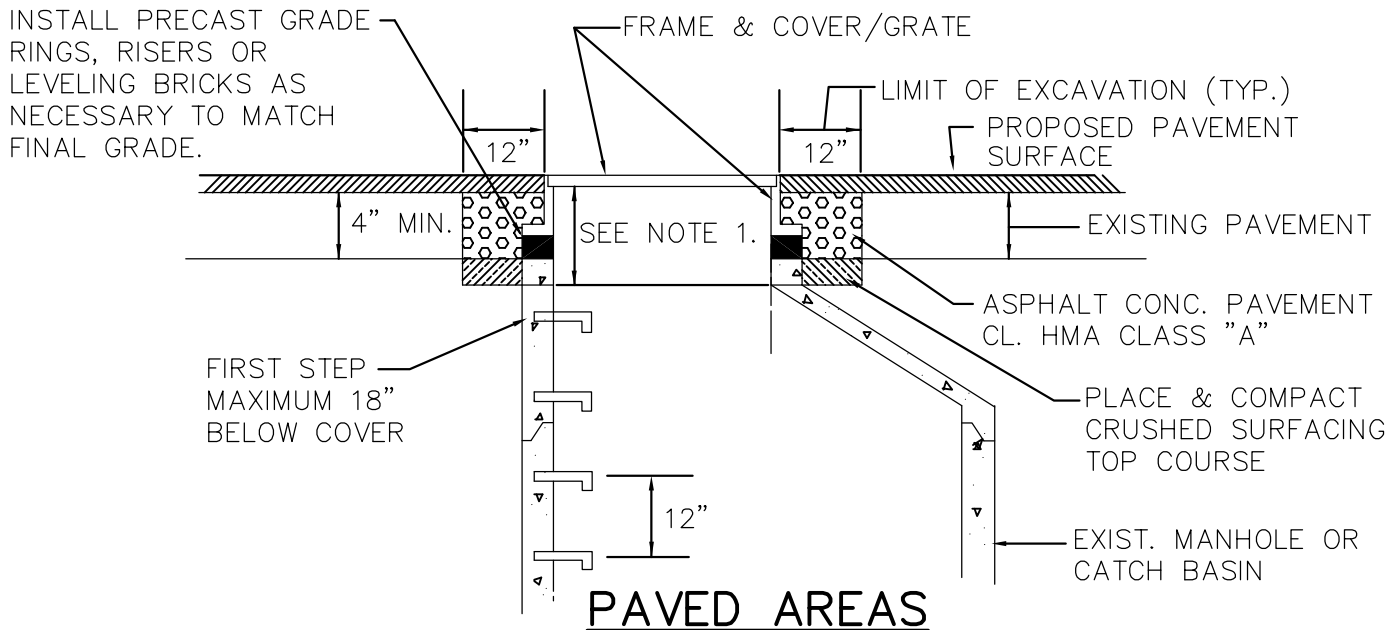

PAVED AREAS

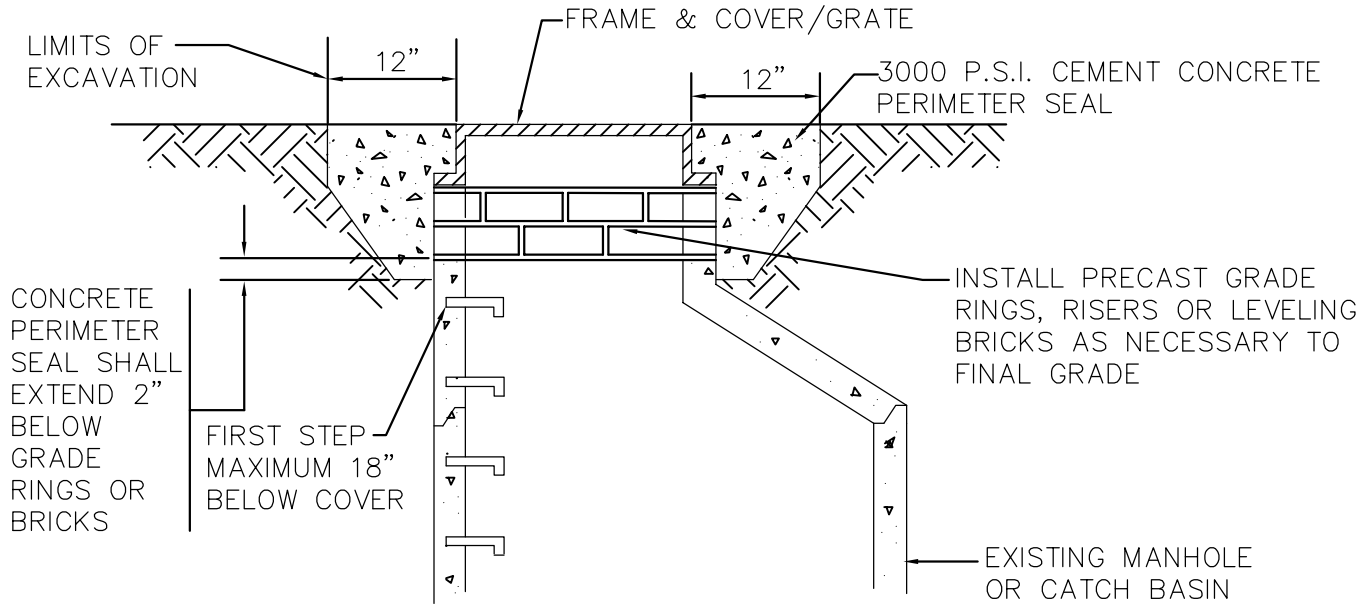

UNPAVED AREAS

NOTES:

1. WHERE DEPTH OF NECK EXCEEDS 24 INCHES, ADJUST MANHOLE/CATCH BASIN TO GRADE BY INSERTING NEW BARREL SECTION BETWEEN THE CONE/SLAB AND EXISTING BARREL.
2. GRADE RINGS, CONCRETE RISERS AND CONCRETE BRICK SHALL BE SET IN 3/4" NON-SHRINK GROUT, PLASTER SMOOTH INSIDE AND OUT.
3. STEPS OR HAND HOLDS SHALL BE ADDED AS NEEDED.
4. PRECAST GRADE RINGS AND RISERS MUST BE CAST WITH GROOVE TO ALLOW FIELD INSTALLATION OF SAFETY STEP.
5. REPLACE EXISTING FRAME AND COVER/GRATE IF NON-STANDARD OR WORN.
6. GROUT INSIDE AND OUTSIDE OF MANHOLE/ CATCH BASIN NECK TO ACHIEVE WATER TIGHT CONSTRUCTION. FINISH SMOOTH THE INSIDE OF THE NECK. USE NON-SHRINK GROUT ONLY.
7. LOCKING RING AND COVERS ARE REQUIRED IN ALL UNPAVED AREAS AND EASEMENTS. LOCKING RING AND COVER SHALL CONFORM TO STANDARD DETAIL D-22.

City of Bellevue

STORM AND SURFACE WATER UTILITY

TITLE

MANHOLE/CATCH BASIN ADJUSTMENT DETAIL

JANUARY 2017 NO SCALE

NO. D-23

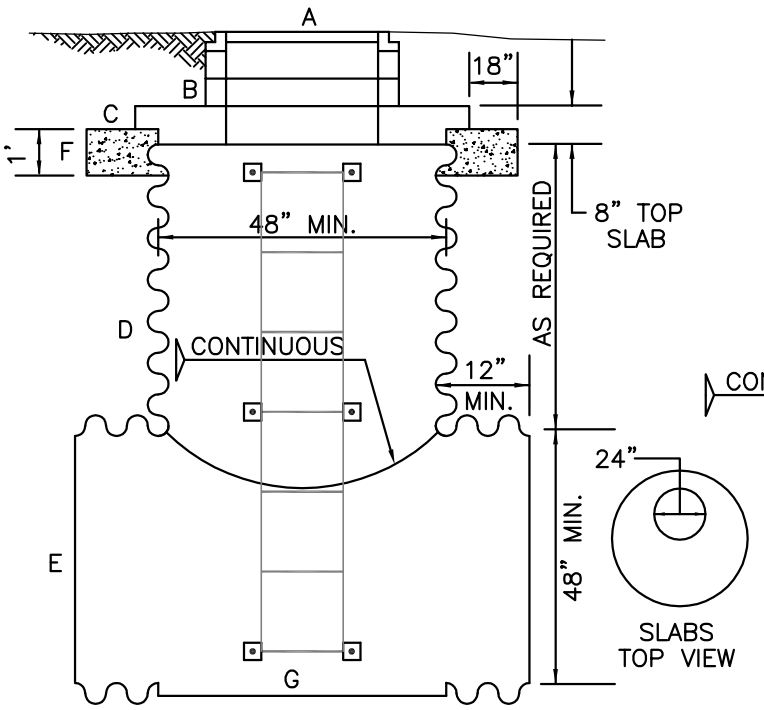

CONCENTRIC ELEVATION

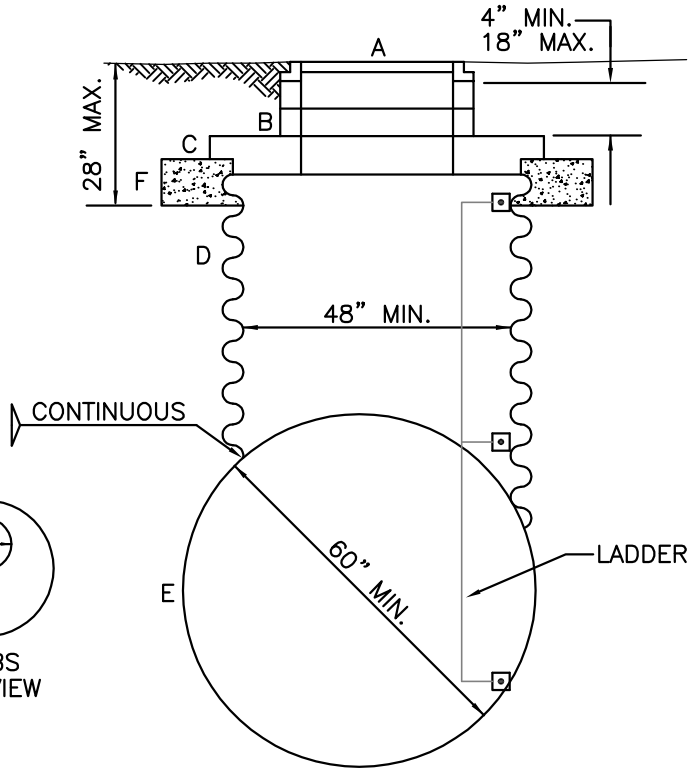

ECCENTRIC SECTION

LEGEND

A BOLT LOCKING MANHOLE RING AND COVER PER DETAIL D–22.

B CONCRETE GRADE RINGS AS NEEDED TO MATCH FINISHED GRADE PER DETAIL D–23.

C CONCRETE TOP SLAB FOR TYPE 2 CATCH BASIN, BEARS ON CONCRETE COLLAR.

D CMP RISER: 10 GAUGE HELICAL OR ANNULAR CORRUGATED METAL PIPE, DIAMETER TO MATCH DETENTION PIPE.

E CORRUGATED METAL STUBS AND DETENTION PIPE TO BE SAME GAUGE. STUB LENGTHS TO BE 12" MIN.

F CONCRETE COLLAR CL 3000.

G STEEL BOTTOM: 8 GAUGE BOTTOM PLATE WELDED TO RISER

NOTES:

1. ALL METAL PARTS AND SURFACES MUST BE MADE OF CORROSION RESISTANT MATERIAL. PIPES SHALL BE ASPHALT COATED TREATMENT #1, GALVANIZED STEEL OR ALUMINIZED STEEL.
2. NOT FOR USE IN ROADWAYS, DRIVEWAYS, AND OTHER VEHICULAR TRAFFIC AREAS.
3. FOR USE IN DETENTION PIPES ONLY.
4. APPLY NON–SHRINK GROUT TO INSIDE AND OUTSIDE OF ALL JOINTS, RISERS, RINGS, AND FRAMES.

City of Bellevue

STORM AND SURFACE WATER UTILITY

TITLE

CORRUGATED METAL MANHOLE

JANUARY 2017

NO SCALE

NO. D–24

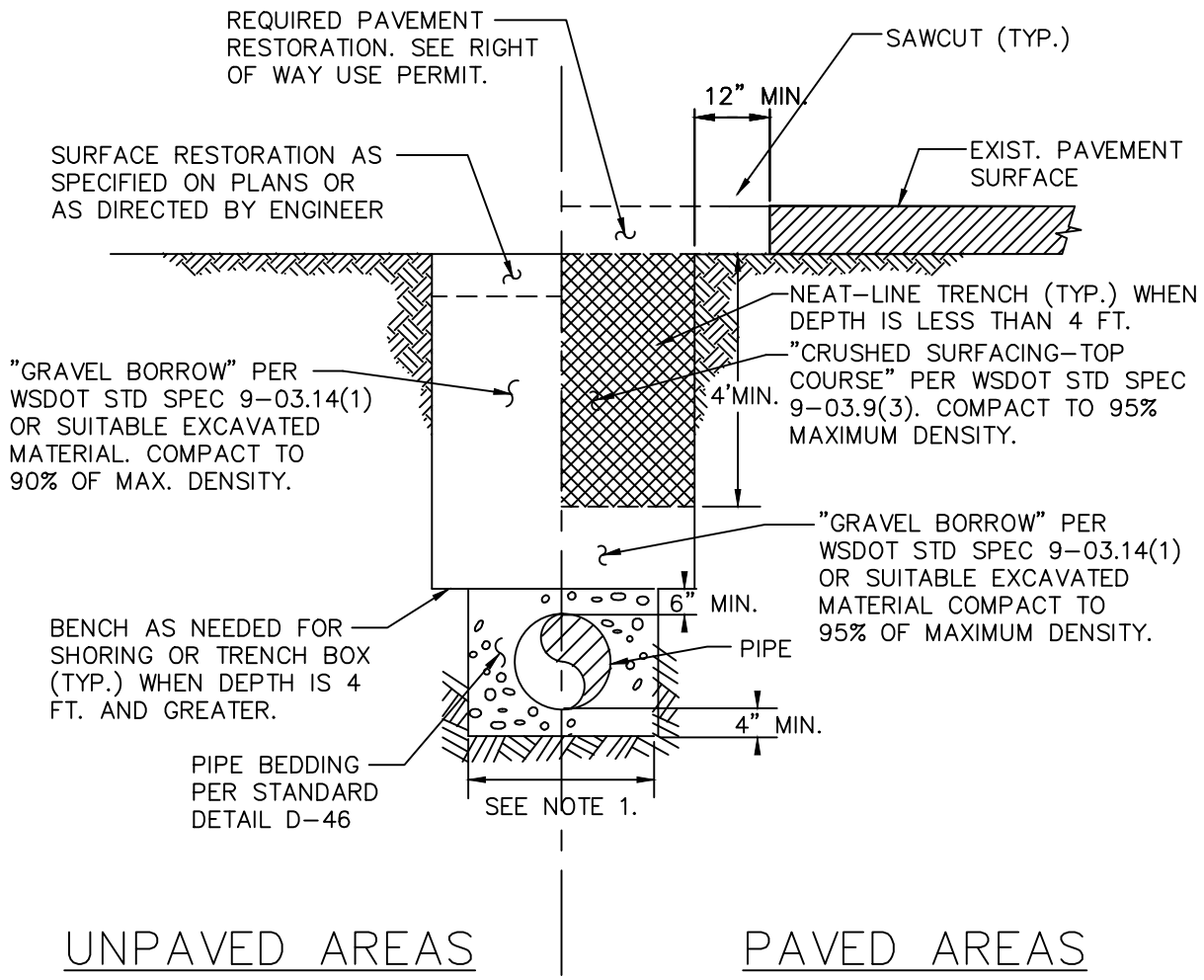

NOTES:

1. MAXIMUM WIDTH OF TRENCH AT TOP OF PIPE
   * 30" FOR PIPE UP TO AND INCLUDING 18" NOMINAL DIAMETER.
   * O.D. PLUS 16" FOR PIPE LARGER THAN 18" NOMINAL DIAMETER.
2. EXCAVATIONS OVER 4' DEEP SHALL COMPLY WITH THE SAFETY STANDARD DESCRIBED IN CHAPTER 296-155-PART N OF THE WAC.
3. SEE "BACKFILLING TRENCHES" IN CHAPTER D8 OF THE ENGINEERING STANDARDS FOR ADDITIONAL CONSTRUCTION REQUIREMENTS.

City of Bellevue

STORM AND SURFACE WATER UTILITY

TITLE

TYPICAL TRENCH DETAIL

JANUARY 2017

NO SCALE

NO. D-25

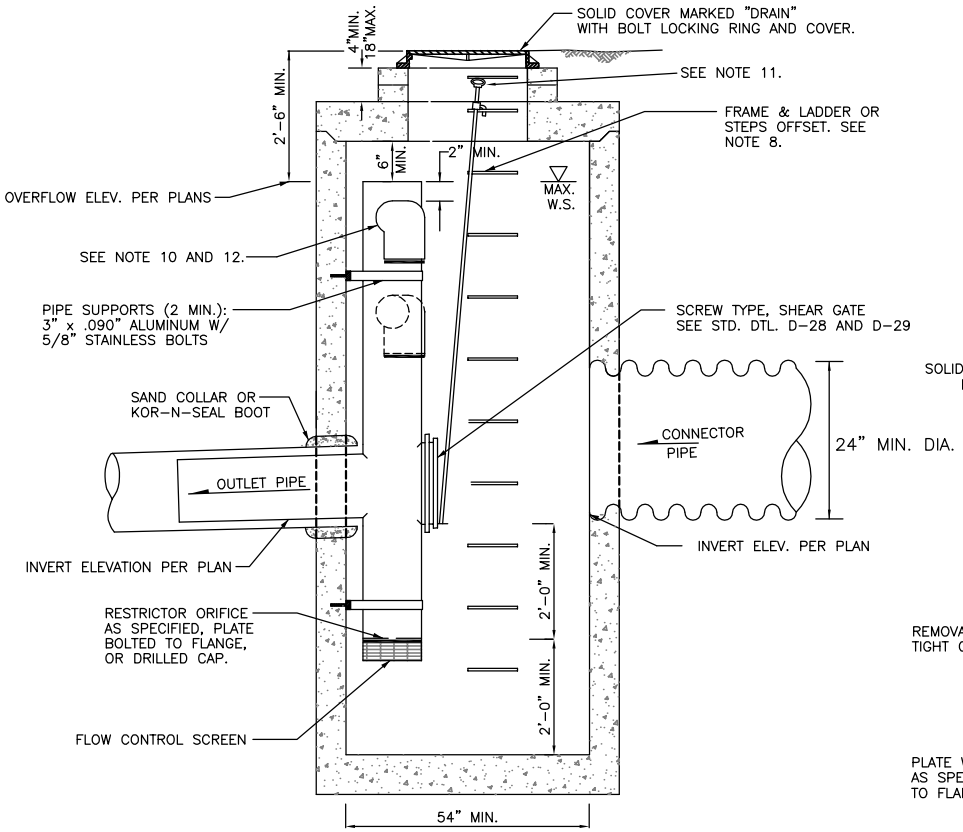

CATCH BASIN TYPE 2

DIAM. AS REQUIRED BY PLANS

NOTE:
ATTACH SCREEN TO CMP CROSS W/ 6 1" METAL SCREWS-2 PER STRAP, OR USE STAINLESS STEEL PIPE CLAMP

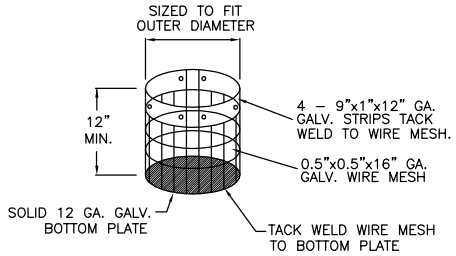

FLOW CONTROL SCREEN

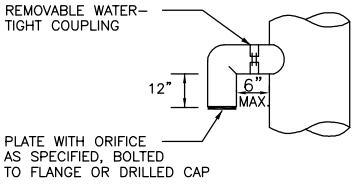

ELBOW DETAIL

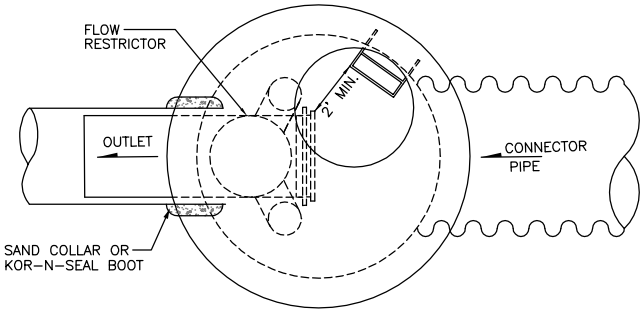

PLAN

NOTES:

1. PIPE SIZES, INVERT ELEVATIONS, ORIFICE SIZES, OVERFLOW ELEVATIONS AND SLOPES; PER ENGINEER APPROVED STAMPED PLANS.
2. OUTLET CAPACITY: NOT LESS THAN COMBINED INLETS.
3. EXCEPT AS SHOWN OR NOTED, UNITS SHALL BE CONSTRUCTED IN ACCORDANCE WITH THE REQUIREMENTS FOR CATCH BASIN TYPE 2, 54" MIN. DIAM.
4. PIPE SUPPORTS AND RESTRICTOR SHALL BE OF SAME MATERIAL, AND BE ANCHORED AT 3' MAX. SPACING BY 5/8" DIAMETER STAINLESS STEEL EXPANSION BOLTS OR EMBEDDED 2" IN WALL.
5. THE RESTRICTOR SHALL BE FABRICTED FROM 0.060" ALUMINUM, PVC, CPE, OR HDPE PIPE PER THESE ENGINEERING STANDARDS.
6. OUTLET SHALL BE CONNECTED TO STORM DRAINAGE PIPE WITH SUITABLE COUPLER OR GROUTED INTO THE BELL OF CONCRETE PIPE.
7. THE VERTICAL RISER STEM OF THE RESTICTOR SHALL BE THE SAME DIAM. AS THE HORIZONTAL OUTLET PIPE, WITH AN 8" MIN. DIAM. VERTICLE RISER SECTION SHALL BE ALIGNED PLUMB VERTICALLY. HORIZONTAL SECTION SHALL MATCH OUTLET PIPE SLOPE.
8. FRAME AND LADDER OR STEPS OFFSET SO THAT:
   A. SCREW TYPE SHEAR GATE IS VISIBLE FROM TOP.
   B. CLIMB DOWN SPACE IS CLEAR OF RISER AND SCREW TYPE SHEAR GATE.
   C. FRAME IS CLEAR OF CURB.
9. IF METAL OUTLET PIPE CONNECTS TO CEMENT CONCRETE PIPE: OUTLET PIPE TO HAVE SMOOTH O.D. EQUAL TO CONCRETE PIPE I.D. LESS 1/4".
10. MULTI-ORIFICE ELBOWS MAY BE LOCATED AS SHOWN OR ALL ON ONE SIDE OF RISER TO ASSURE LADDER CLEARANCE.
11. IF PIVOTING TYPE SHEAR GATE IS USED (PRIVATE SYSTEMS ONLY) SHEAR GATE HANDLE SHALL BE ATTACHED TO ADDER/STEP LOCATED WITHIN 24" ACCESS SECTION.
12. IF NOTCHED WEIR IS USED IN LIEU OF ELBOW, BAFFLE SHALL NOT OBSTRUCT ACCESS TO THE STRUCTURE.
13. APPLY NON-SHRINK GROUT TO INSIDE AND OUTSIDE OF ALL JOINTS, RINGS, RISERS, FRAMES AND PIPE PENETRATIONS.
14. PENETRATE CARRIER PIPE THROUGH VAULT WALL.
15. USE APPROVED WATERTIGHT STRUCTURE ADAPTOR.
16. SLIP SMOOTH-BORE HORIZONTAL LEG OF FLOW CONTROL TEE INSIDE CARRIER PIPE.
17. NO FLOW CONTROL JOINT OUTSIDE OF STRUCTURE.

City of Bellevue

STORM AND SURFACE WATER UTILITY

TITLE

FLOW CONTROL STRUCTURE

JANUARY 2017 NO SCALE

NO. D-26

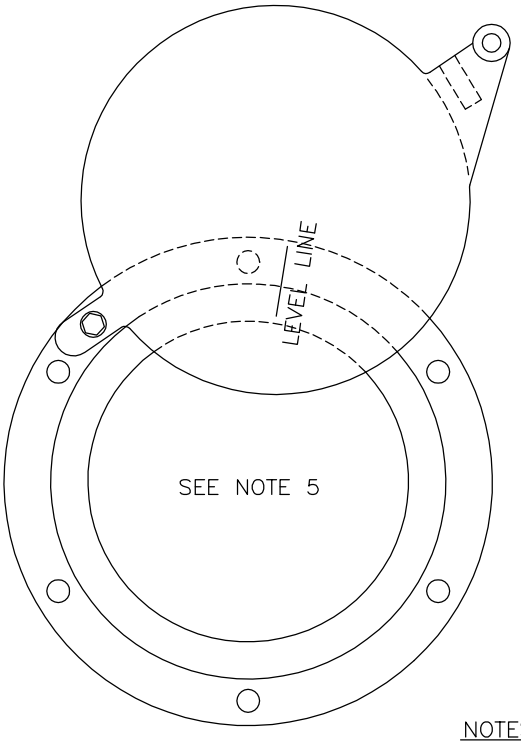

MAXIMUM OPENING OF GATE

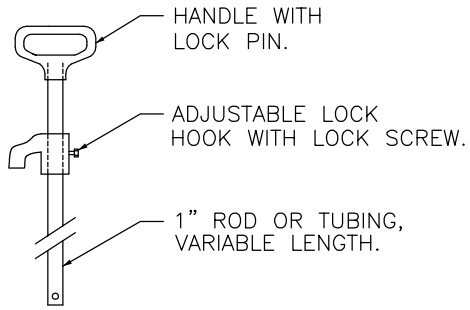

LIFT HANDLE

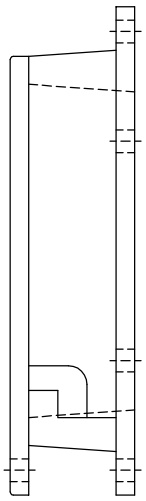

SIDE

NOTES:

1. SHEAR GATE SHALL BE ALUMINUM ALLOY PER ASTM B-26-ZG-32a OR CAST IRON ASTM A48 CLASS 30B AS REQUIRED.
2. GATE SHALL BE 8" DIAMETER FOR PIPE 12 INCHES OR LESS IN DIAMETER, 12" DIAMETER FOR PIPES GREATER THAN 12" INCHES.
3. GATE SHALL BE JOINED TO TEE SECTION BY BOLTING THROUGH FLANGE.
4. LIFT ROD: AS SPECIFIED BY MFR. WITH HANDLE EXTENDING TO WITHIN ONE FOOT OF COVER AND ADJUSTABLE HOOK LOCK FASTENED TO FRAME OR UPPER HANDHOLD.
5. GATE SHALL NOT OPEN BEYOND THE CLEAR OPENING BY LIMITED HINGE MOVEMENT, STOP TAB, OR SOME OTHER DEVICE.
6. NEOPRENE RUBBER GASKET REQUIRED BETWEEN RISER MOUNTING FLANGE AND GATE FLANGE, STOP TAB, OR SOME OTHER DEVICE.
7. MATING SURFACES OF LID AND BODY TO BE MACHINED FOR PROPER FIT.
8. FLANGE MOUNTING BOLTS SHALL BE 3/8" DIAM. STAINLESS STEEL.
9. ALTERNATE SHEAR GATES TO THE DESIGN SHOWN ARE ACCEPTABLE, PROVIDED THEY MEET THE MATERIAL SPECIFICATIONS ABOVE.
10. FOR PRIVATE USE ONLY.

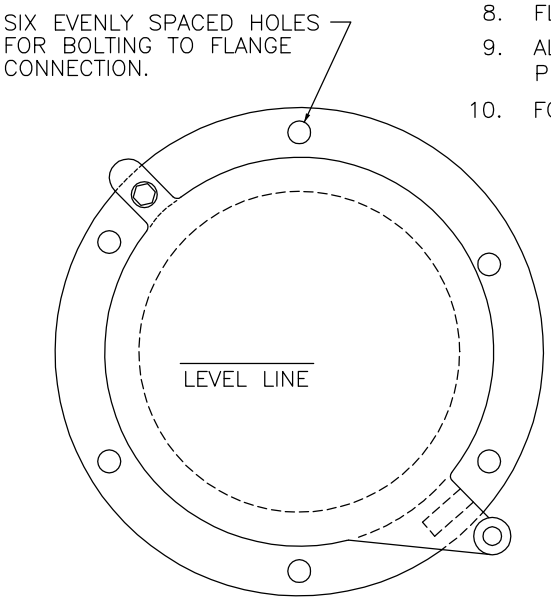

FRONT

City of Bellevue

STORM AND SURFACE WATER UTILITY

TITLE

PIVOTING SHEAR GATE DETAIL

JANUARY 2017

NO SCALE

NO. D-27

1 FRAME–CAST IRON
2 COVER–CAST IRON
3 ARCH–CAST IRON
4 RAILS–304 STN. STL. (CAST IRON, THRU 14")
5 YOKE–CAST IRON
6 THRUST NUT–BRONZE
7 THREADED STEM–BRONZE
8 COLLAR–CAST IRON
9 STEM EXT BRKT–
10 STEEL EXT STEM MATL. AS REQ'D.
11 2" SQUARE OPERATING NUT
12 BRONZE SEAT

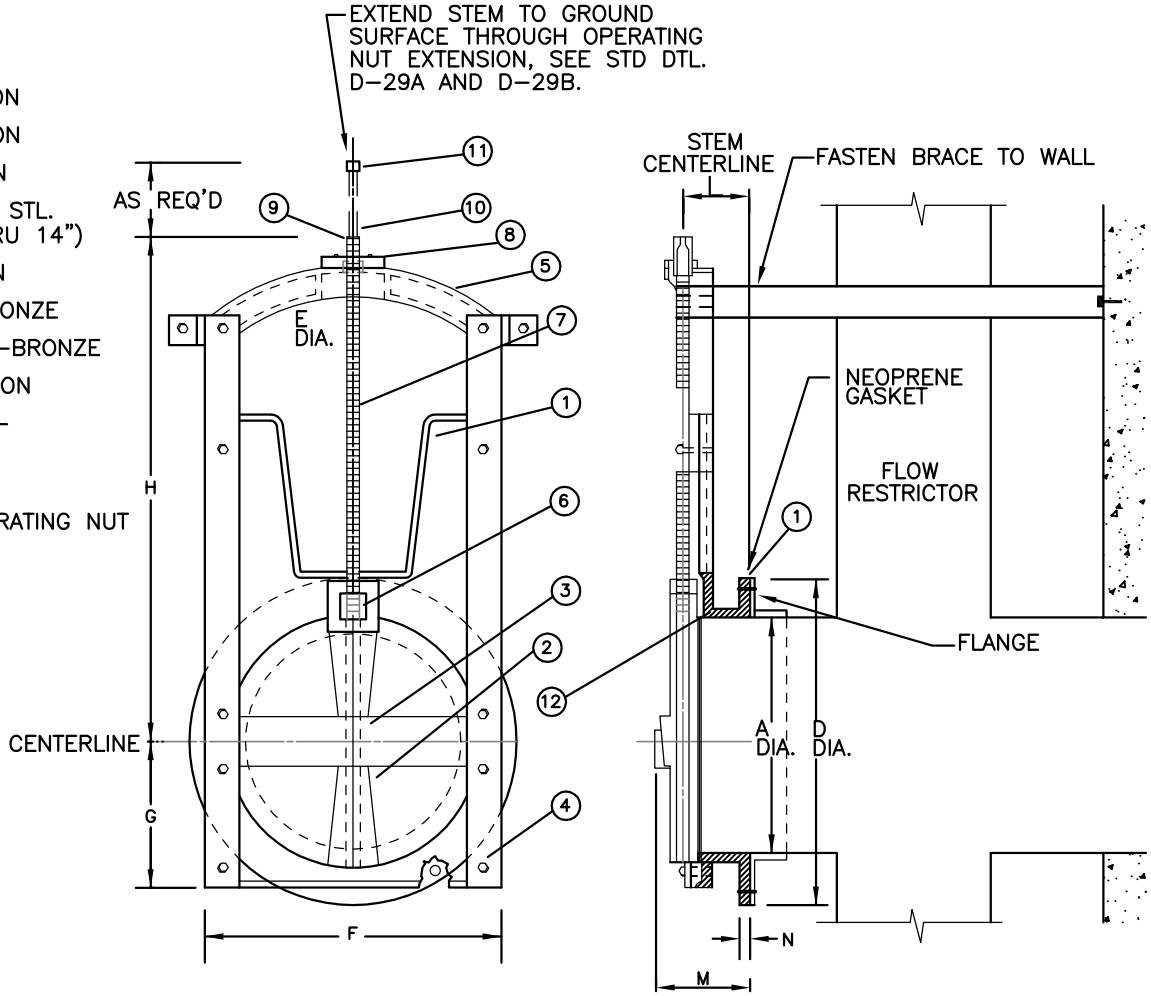

	A	BC	D	E	F	G	H	K	L	M	N	P	R	S
DIMENSIONS (IN INCHES)	8	11 3/4	13 1/2	7/8	11 1/8	5 1/2	17 5/8	10	4 1/2	7	3/4	7/8	3/4	8
	12	17	19	7/8	15 5/8	8	24 1/4	12	4 1/2	7 1/2	1	1	7/8	12

NOTES:

1. FOR OUTLET PIPE DIAMETERS OF 12 INCHES OR LESS, USE 8 INCH SHEAR GATE, GREATER THAN 12 INCHES, USE 12 INCH SHEAR GATE.
2. AWWA C509 RESILIENT SEATED GATE VALVE MAY BE SUBSTITUTED FOR GATE PER ENGINEER'S APPROVAL.

City of Bellevue

STORM AND SURFACE WATER UTILITY

TITLE

SCREW–TYPE SHEAR GATE

NO. D–28

JANUARY 2017

NO SCALE

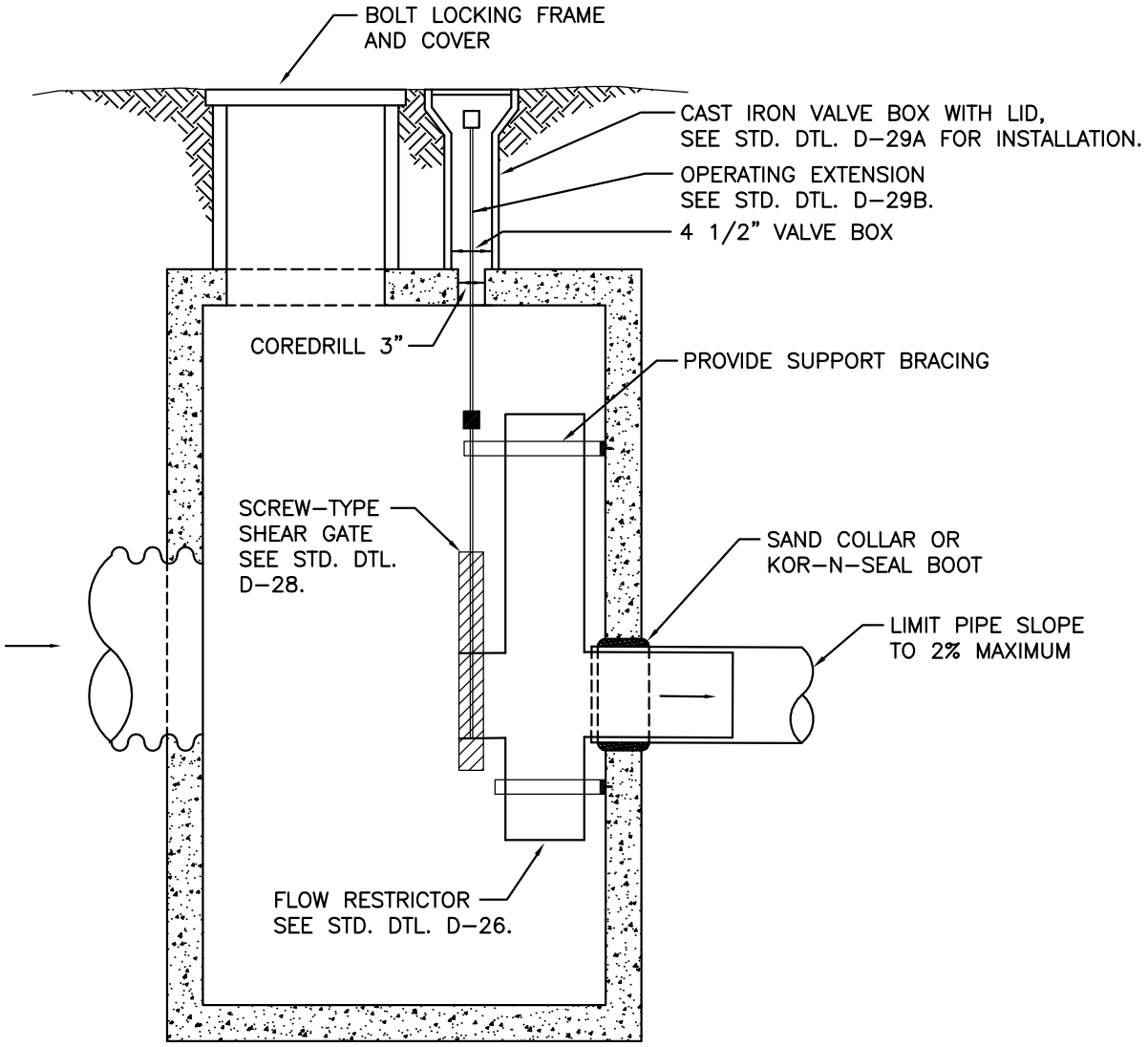

NOTES:

1. CORE DRILL HOLE IN CATCH BASIN LID. GROUT WATER VALVE BOX IN PLACE.
2. ALL METAL PARTS & SURFACES MUST BE CORROSION RESISTANT. STEEL HARDWARE SHALL BE GALVANIZED. PIPES SHALL BE GALVANIZED, ASPHALT COATED (TREATMENT 1) OR ALUMINIZED. COMPLETE CORROSION PROTECTION MUST BE ASSURED.
3. APPLY NON-SHRINK GROUT TO INSIDE AND OUTSIDE OF ALL JOINTS, RINGS, RISERS, PIPE PENETRATIONS AND FRAMES.
4. ALL PIPES SHALL BE PERPENDICULAR TO FACE OF VAULT.
5. PENETRATE CARRIER PIPE THROUGH VAULT WALL.
6. USE APPROVED WATERTIGHT STRUCTURE ADAPTOR.
7. SLIP SMOOTH-BORE HORIZONTAL LEG OF FLOW CONTROL TEE INSIDE CARRIER PIPE.
8. NO FLOW CONTROL JOINT OUTSIDE OF STRUCTURE.

City of Bellevue

STORM AND SURFACE WATER UTILITY

TITLE

SHEAR GATE VALVE VAULT

NO. D-29

JANUARY 2017

NO SCALE

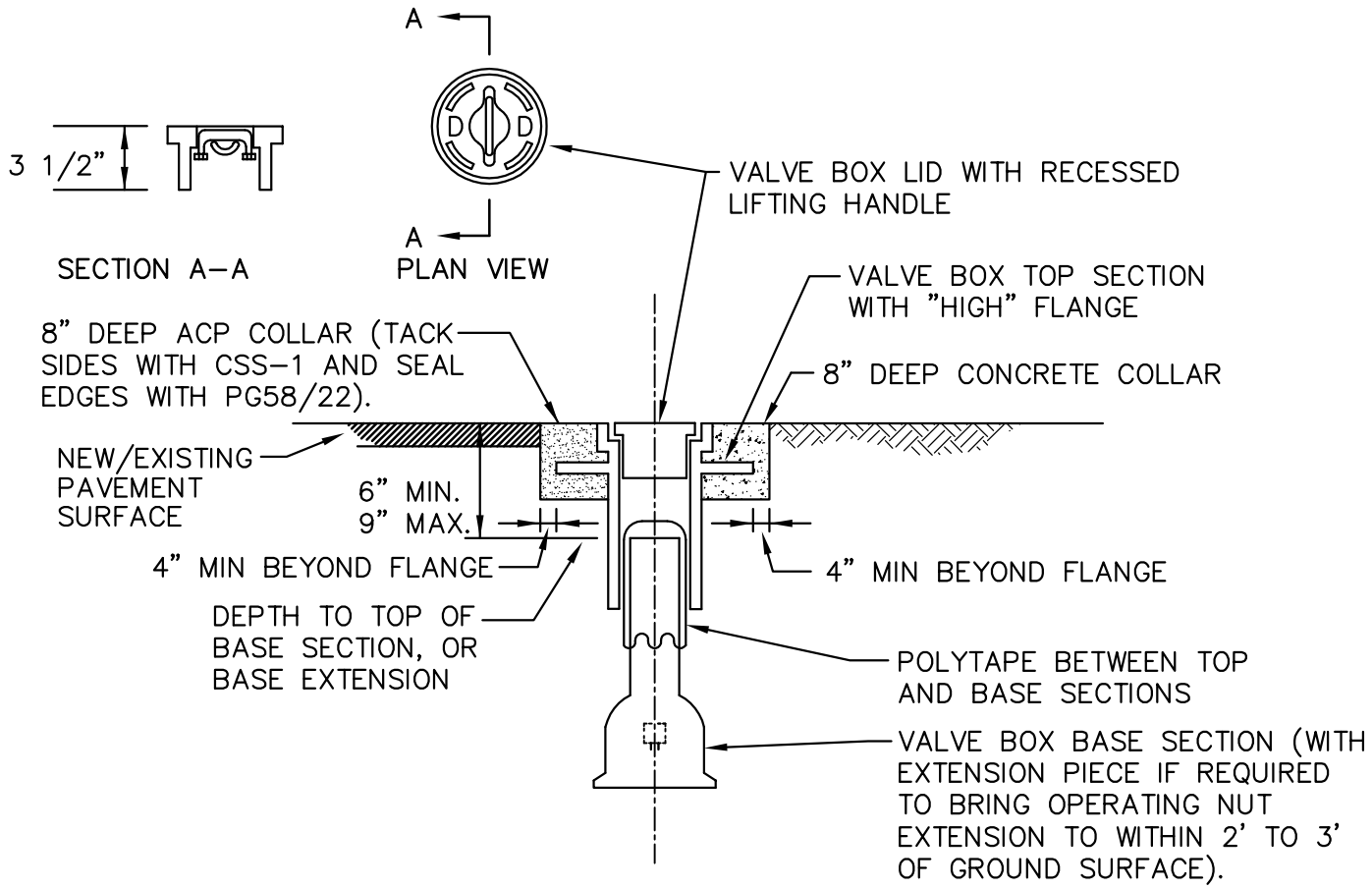

PAVED AREAS

UNPAVED AREAS

NOTES:

1. ALL PARTS SHALL BE CAST OR DUCTILE IRON AND COATED WITH. ASPHALTIC VARNISH.
2. OLYMPIC FOUNDRY INC: #VB045 LID, TOP AND BASE.
3. RICH (VANRICH CASTING CORP.): TOP SECTION AND LID #045 WITH RICH STANDARD BASE.
4. 12" ADJUSTING SLEEVE #044A.

City of Bellevue

STORM AND SURFACE WATER UTILITY

TITLE

VALVE BOX AND EXTENSION INSTALLATION

NO. D–29A

JANUARY 2017

NO SCALE

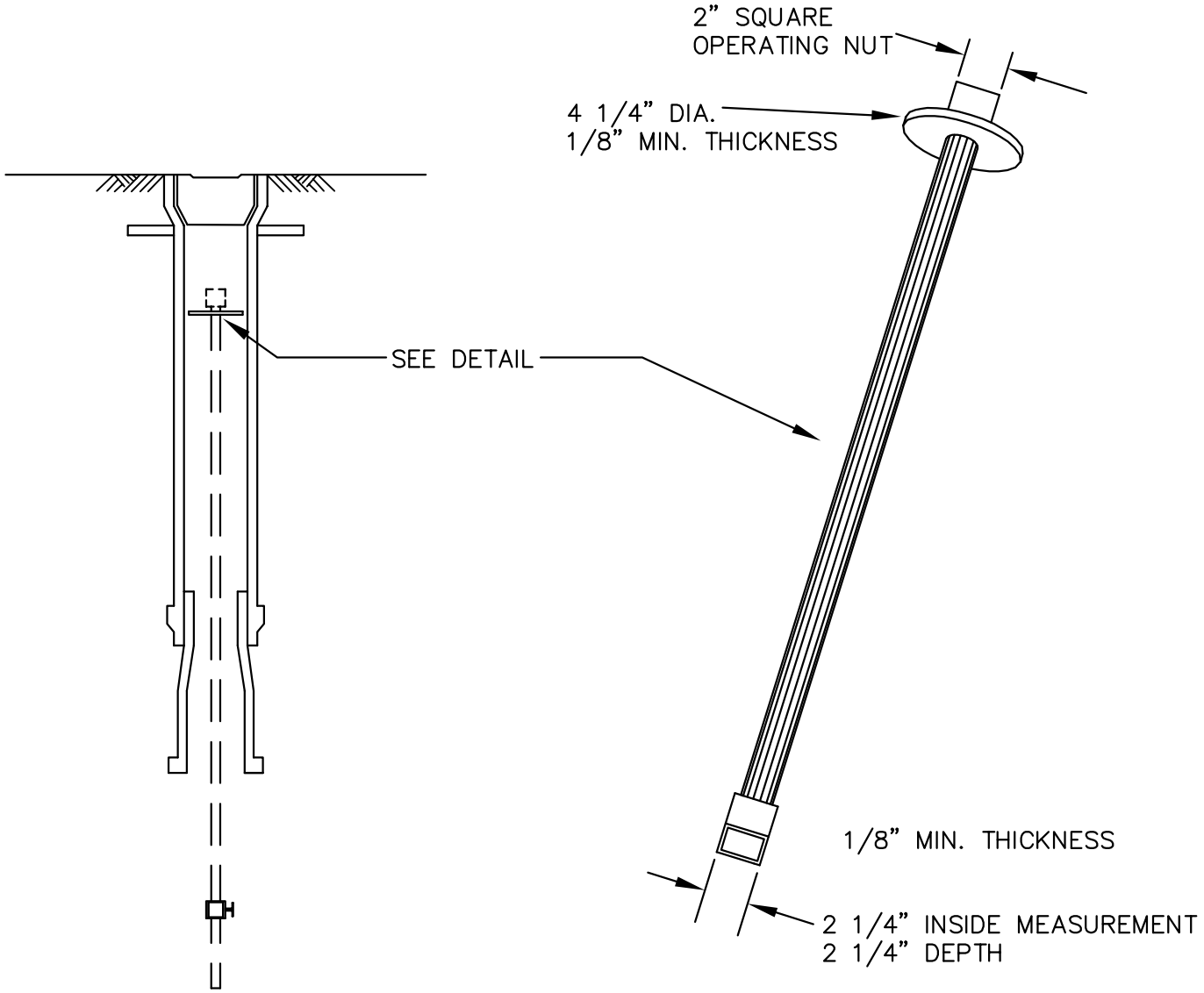

VALVE OPERATING NUT EXTENSION

EXTENSIONS ARE REQUIRED WHEN THE VALVE NUT IS MORE THAN THREE (3) FEET BELOW FINISHED GRADE. EXTENSIONS ARE TO BE A MINIMUM OF ONE (1) FOOT LONG. ONLY ONE EXTENSION TO BE USED PER VALVE.

NOTES:

1. ALL EXTENSIONS ARE TO BE MADE OF STEEL, SIZED AS NOTED, AND HOT DIPPED GALVANIZED.

City of Bellevue

STORM AND SURFACE WATER UTILITY

TITLE

VALVE OPERATING EXTENSION

JANUARY 2017

NO SCALE

NO. D-29B

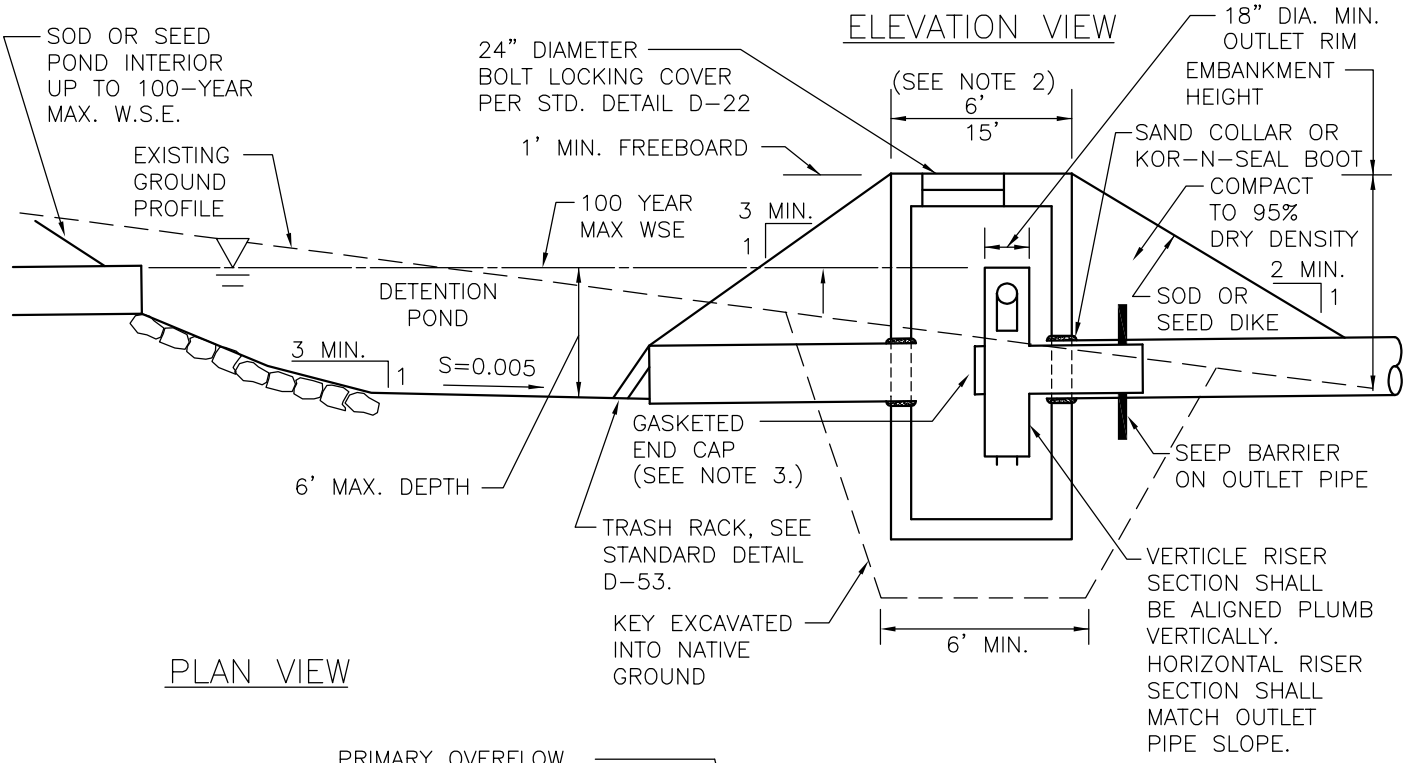

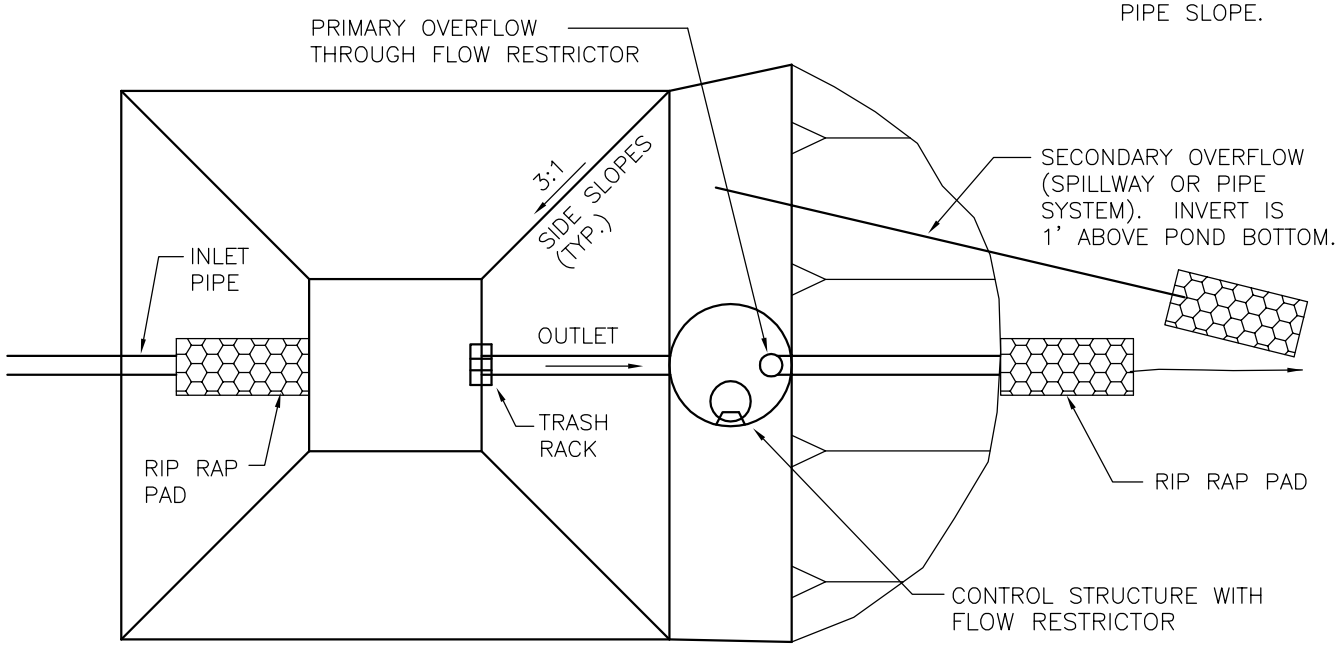

NOTES:

1. LANDSCAPE PLAN IS REQUIRED TO BEAUTIFY OR SCREEN POND.
2. 6' MINIMUM TOP WIDTH OF EMBANKMENT, 15' MINIMUM FOR VEHICLE ACCESS TO CONTROL STRUCTURE.
3. SCREW TYPE SHEAR GATE REQUIRED FOR ALL SYSTEMS TO BE MAINTAINED BY THE CITY.
4. CAPACITY OF OUTLET PIPE MUST BE EQUAL TO OR GREATER THAN DISCHARGE DURING EMERGENCY OVERFLOW CONDITION, IF PIPE OVERFLOW IS USED IN LIEU OF SPILLWAY, 8-INCH MINIMUM DIAMETER.
5. PENETRATE CARRIER PIPE THROUGH VAULT WALL.
6. USE APPROVED WATERTIGHT STRUCTURE ADAPTOR.
7. SLIP SMOOTH-BORE HORIZONTAL LEG OF FLOW CONTROL TEE INSIDE CARRIER PIPE.
8. NO FLOW CONTROL JOINT OUTSIDE OF STRUCTURE.

City of Bellevue

STORM AND SURFACE WATER UTILITY

TITLE

DRY DETENTION POND

NO. D-30

JANUARY 2017

NO SCALE

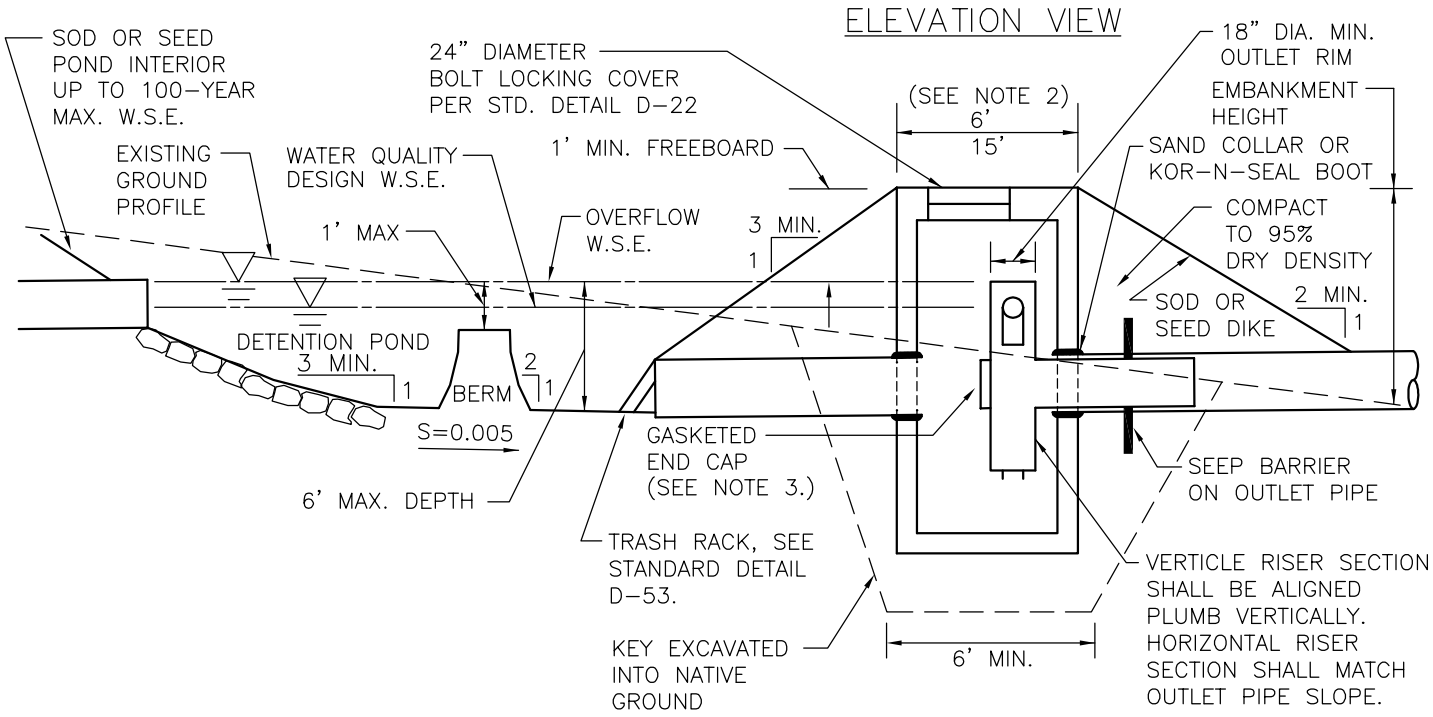

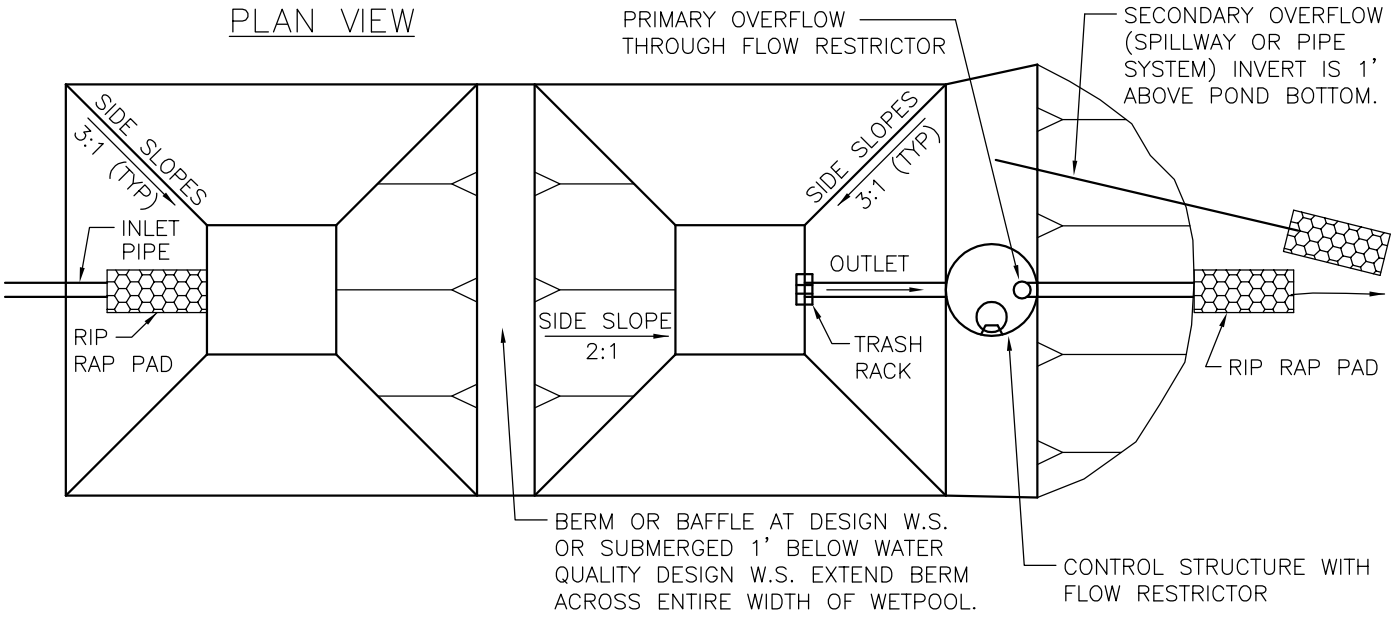

NOTES:

1. LANDSCAPE PLAN IS REQUIRED TO BEAUTIFY OR SCREEN POND.
2. 6' MINIMUM TOP WIDTH OF EMBANKMENT, 15' MINIMUM FOR VEHICLE ACCESS TO CONTROL STRUCTURE.
3. SCREW TYPE SHEAR GATE REQUIRED FOR ALL SYSTEMS TO BE MAINTAINED BY THE CITY.
4. CAPACITY OF OUTLET PIPE MUST BE EQUAL TO OR GREATER THAN DISCHARGE DURING EMERGENCY OVERFLOW CONDITION IF PIPE OVERFLOW IS USED IN LIEU OF SPILLWAY. 8-INCH MINIMUM DIAMETER.
5. BERM SLOPE MAY BE 2:1 WHEN TOP SUBMERGED 1' BELOW WATER QUALITY DESIGN W.S.E.
6. PENETRATE CARRIER PIPE THROUGH WALL.
7. USE APPROVED WATERTIGHT STRUCTURE ADAPTOR.
8. SLIP SMOOTH-BORE HORIZONTAL LEG OF FLOW CONTROL TEE INSIDE CARRIER PIPE.
9. NO FLOW CONTROL JOINT OUTSIDE OF STRUCTURE.

City of Bellevue

STORM AND SURFACE WATER UTILITY

TITLE

WATER QUALITY POND

JANUARY 2017

NO SCALE

NO. D-30A

ELEVATION VIEW

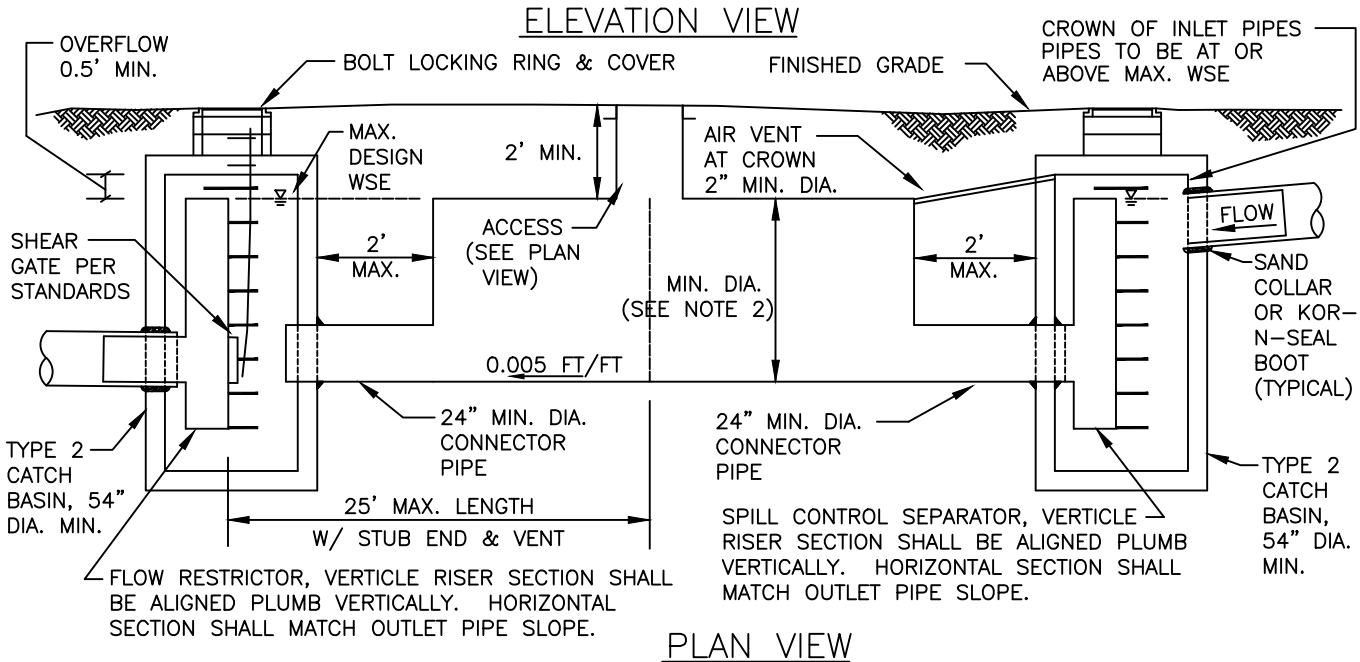

PLAN VIEW

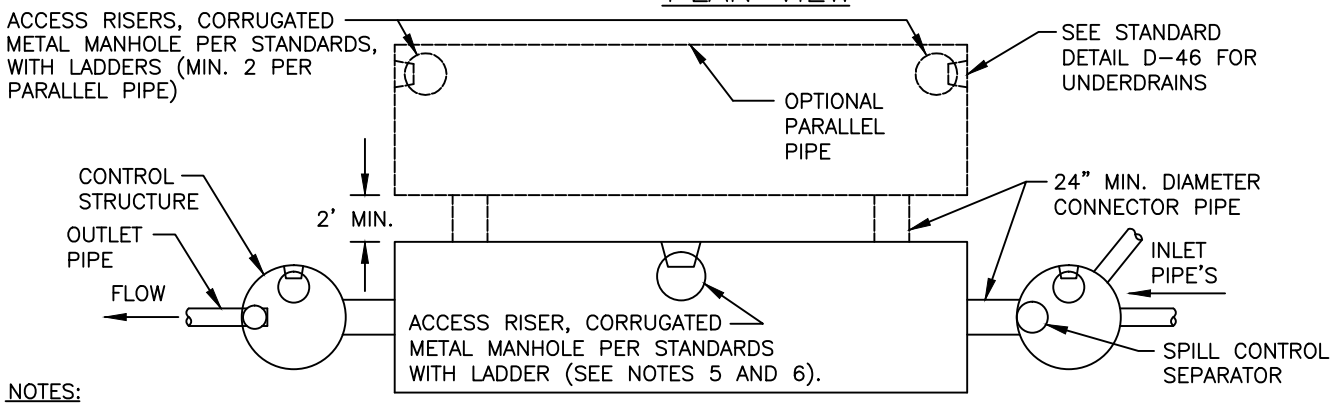

NOTES:

1. NEOPRENE GASKETS REQUIRED AT ALL CMP AND CPE PIPE JOINTS.
2. 36" MINIMUM PIPE DIAMETER. PROVIDE TYPE 2 CATCH BASIN AT EACH END OF PIPE (MAXIMUM SPACING SHALL BE 50 FEET).
3. ALL METAL PARTS AND SURFACES SHALL BE CORROSION RESISTANT. STEEL HARDWARE SHALL BE GALVANIZED. PIPE SHALL BE GALVANIZED, ASPHALT COATED (TREATMENT 1) OR ALUMINIZED. COMPLETE CORROSION PROTECTION MUST BE ASSURED.
4. CAPACITY OF OUTLET PIPE MUST BE EQUAL TO OR GREATER THAN ALL INLET PIPES COMBINED.
5. ACCESS RISERS REQUIRED CENTERED OVER EVERY 50' OF DETENTION PIPE WHEN TYPE 2 CATCH BASINS ARE PROVIDED ON EACH END, OR AT EITHER END OF A 50' LONG PARALLEL PIPE AS SHOWN ABOVE. ADDITIONAL ACCESSES ARE REQUIRED FOR EVERY 50 ADDITIONAL FEET OF DETENTION PIPE. SEE STANDARD DETAIL D-51 FOR ACCESS MANHOLE.
6. IN AREAS WITH VEHICULAR TRAFFIC, PROVIDE TRAFFIC BEARING ACCESS (HS-20) OVER CORRUGATED METAL MANHOLE, PER STANDARD DETAIL D-51.
7. BEDDING SHALL BE IN ACCORDANCE WITH DETAIL D-46 "FLEXIBLE PIPE BENDING".
8. PENETRATE CARRIER PIPE THROUGH VAULT WALL.
9. USE APPROVED WATERTIGHT STRUCTURE ADAPTOR.
10. SLIP SMOOTH-BORE HORIZONTAL LEG OF FLOW CONTROL TEE INSIDE CARRIER PIPE.
11. NO FLOW CONTROL JOINT OUTSIDE OF STRUCTURE.
12. PRIOR TO STARTUP, DETENTION PIPE SHALL PASS LEAK TEST – SEE SECTION D7-06.4

City of Bellevue

STORM AND SURFACE WATER UTILITY

TITLE

DETENTION PIPE

JANUARY 2017

NO SCALE

NO. D-31

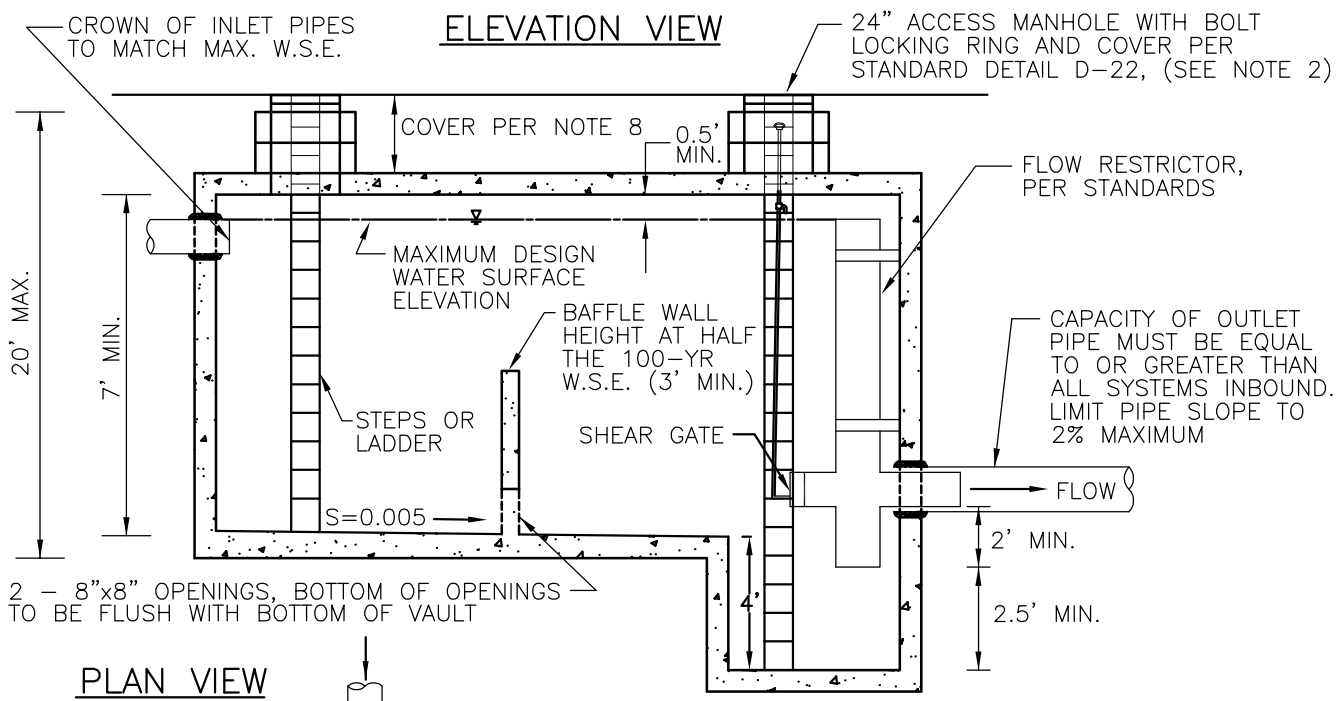

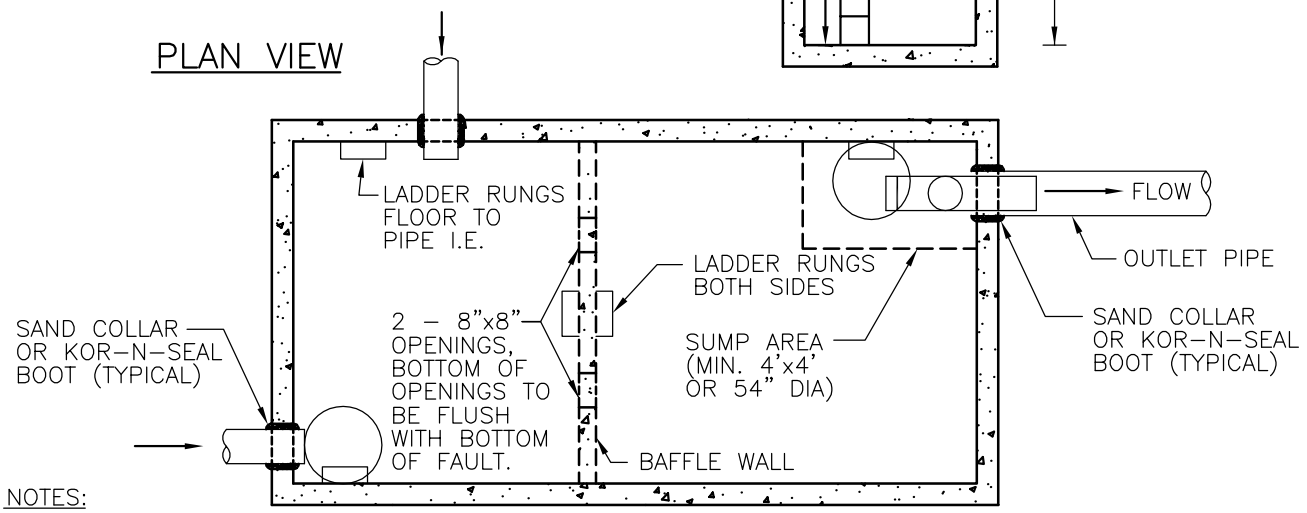

NOTES:

1. BAFFLE WALL TO DIVIDE VAULT INTO TWO APPROXIMATELY EQUAL SIZE CELLS.
2. MINIMUM ONE ACCESS MANHOLE PER CELL WITH AT LEAST ONE ACCESS PER 50' VAULT LENGTH OR WIDTH.
3. PRE-CAST VAULTS SHALL HAVE APPROVED RUBBER GASKET SYSTEM.
4. VAULT SHALL BE DESIGNED AND STAMPED BY A REGISTERED STRUCTURAL ENGINEER. VAULT SHALL BE DESIGNED FOR HS-20 TRAFFIC LOADINGS, MINIMUM.
5. ALL METAL PARTS SHALL BE CORROSION RESISTANT.
6. PROVIDE LADDER RUNGS IMMEDIATELY ADJACENT TO ALL INLET/OUTLET PIPES.
7. ALL INLETS TO FIRST CELL.
8. IF PROPOSED COVER IS GREATER THAN 1', THEN IT MUST BE 3' MINIMUM AND ACCESS MUST BE A 48" ECCENTRIC CONE SET OVER A 24" DIAMETER ACCESS OPENING.
9. APPLY NON-SHRINK GROUT TO INSIDE AND OUTSIDE OF ALL JOINTS, RINGS, RISERS AND FRAMES.
10. ALL PIPES SHALL BE PREPENDICULAR TO FACE OF VAULT.
11. PENETRATE CARRIER PIPE THROUGH VAULT WALL.
12. USE APPROVED WATERTIGHT STRUCTURE ADAPTOR.
13. SLIP SMOOTH-BORE HORIZONTAL LEG OF FLOW CONTROL TEE INISIDE CARRIER PIPE.
14. NO FLOW CONTROL JOINT OUTSIDE OF STRUCTURE.
15. PRIOR TO STARTUP, DETENTION VAULT SHALL PASS 1% PER DAY LEAK TEST WHERE A MAXIMUM OF 1% WATER LOSS IS ALLOWED WITHIN A 24-HOUR PERIOD WITH VAULT FILLED TO 2-YEAR STORM ELEVATION. TEST PER THE UNFORM PLUMBING CODE 712.2.

JANUARY 2017 NO SCALE

City of Bellevue

STORM AND SURFACE WATER UTILITY

TITLE

DETENTION VAULT

NO. D-32

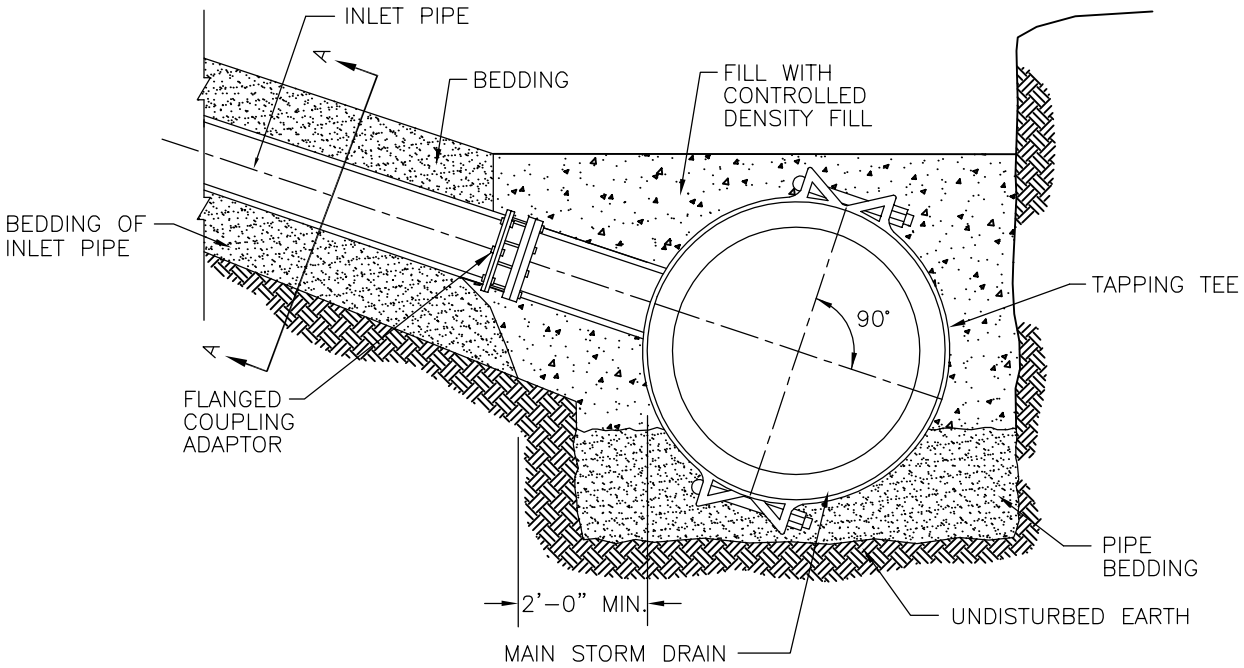

ELEVATION VIEW

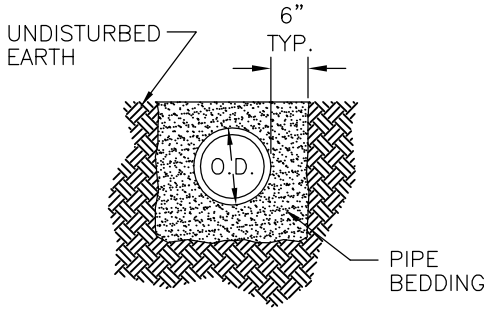

SECTION A–A

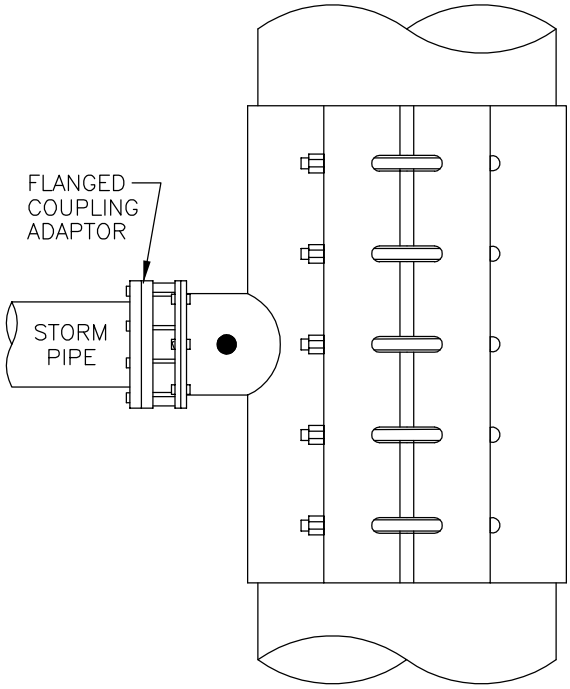

PLAN VIEW

NOTES:

1. "D", THE INSIDE DIAM. OF THE INLET PIPE, SHALL BE 8" OR LESS. FOR LARGER VALUES OF "D", USE A MANHOLE OR CATCH BASIN.
2. IN NO CASE SHALL THE OUTSIDE DIAM. OF THE INLET PIPE EXCEED ONE–HALF THE INSIDE DIAM. OF THE MAIN STORM DRAIN PIPE.
3. ℄ OF INLET PIPE SHALL BE ON RADIUS OF MAIN STORM DRAIN.
4. THE MIN. OPENING INTO THE EXISTING STORM DRAIN SHALL BE THE OUTSIDE DIAM. OF THE INLET PIPE PLUS 1 IN.
5. MAINLINE SHALL HAVE 12" MIN. DIAM.
6. STAINLESS STEEL TAPPING TEES SHALL HAVE FULL CIRCLE SEAL. BOLTS AND NUTS SHALL BE STAINLESS STEEL.
7. ALL TEES TO BE WATER TESTED BEFORE TAP.
8. TAPPING TEE MAY BE SIZE ON SIZE. TAP SHALL BE AT LEAST 2" SMALLER DIAMETER THAN THE EXISTING STORM MAIN.

JANUARY 2017 NO SCALE

City of Bellevue

STORM AND SURFACE WATER UTILITY

TITLE

TAPPING TEES FOR DRAIN PIPE

NO. D–33

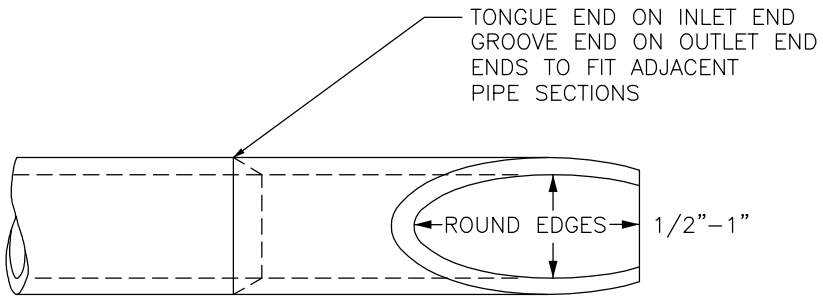

PLAN

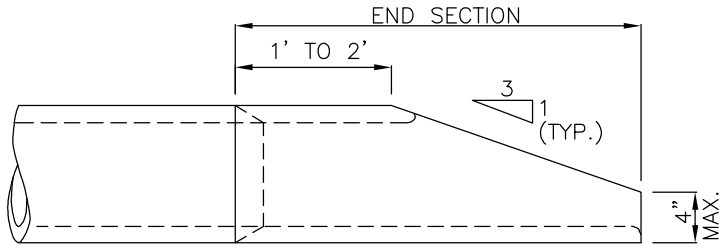

ELEVATION

CONCRETE PIPE

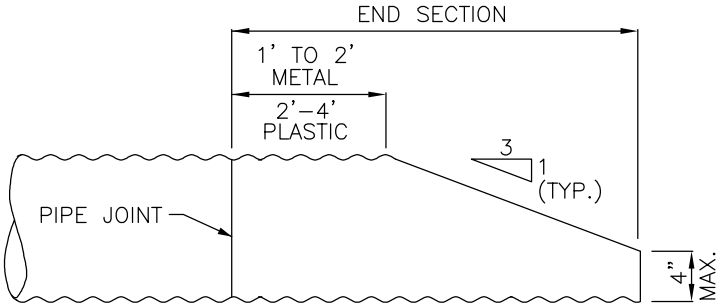

ELEVATION

METAL & THERMO–PLASTIC PIPE

NOTE:

1. SIDE SLOPE SHALL BE WARPED TO MATCH THE BEVELED PIPE END. WHEN CULVERT IS ON SKEW, BEVELED END SHALL BE ROTATED TO CONFORM TO SLOPE. IF SLOPE DIFFERS FROM 3:1, PIPE SHALL BE BEVELED TO MATCH SLOPE.

City of Bellevue

STORM AND SURFACE WATER UTILITY

TITLE

BEVELED END PIPE SECTION

JANUARY 2017

NO SCALE

NO. D–34

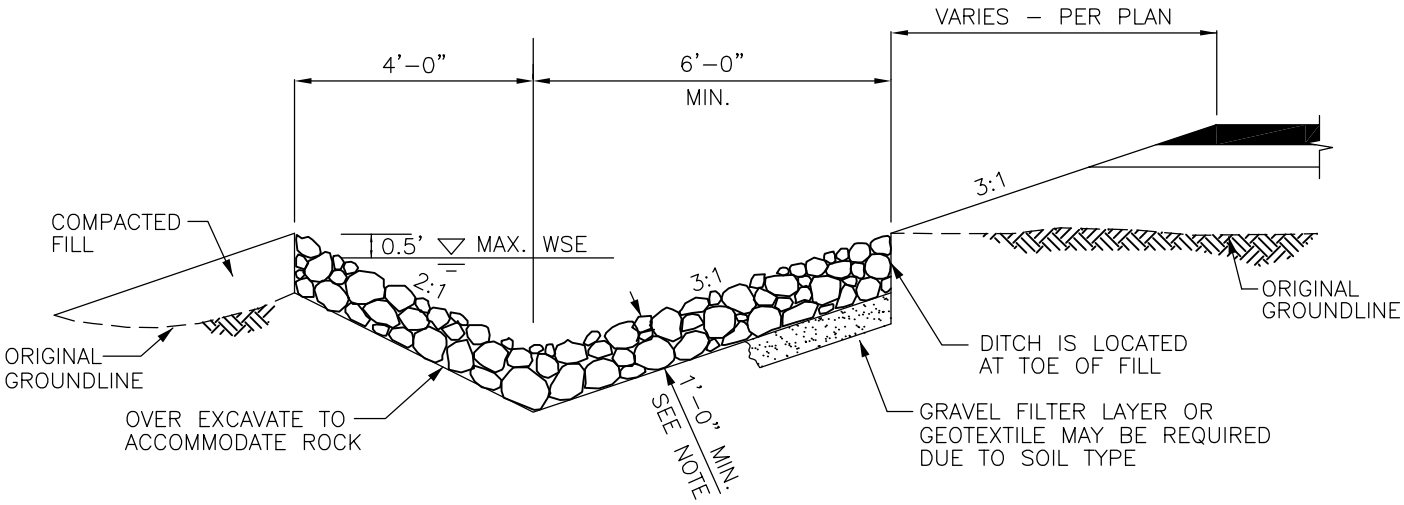

ROCK–LINED SHOULDER DITCH
IN FILL SECTION

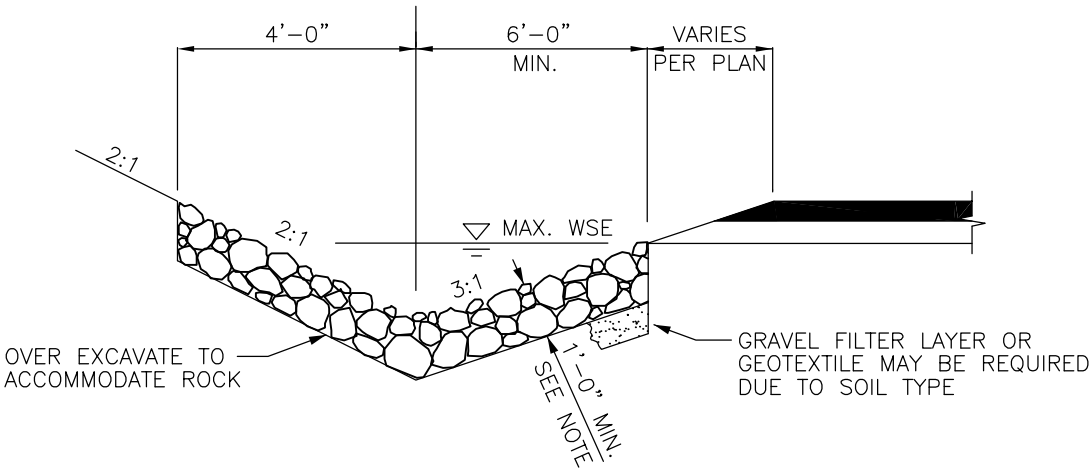

ROCK–LINED SHOULDER DITCH
IN CUT SECTION

NOTES:

1. ROCK LINED DITCHES TO BE USED WHEN FLOW VELOCITIES EXCEED 4 FPS.
2. ROCK SIZE AND DEPTH DEPENDENT ON FLOW VELOCITY. MINIMUM ROCK SIZE 2"–4" QUARRY SPALLS.

City of Bellevue

STORM AND SURFACE WATER UTILITY

TITLE

ROCK–LINED DITCHES

JANUARY 2017

NO SCALE

NO. D–35

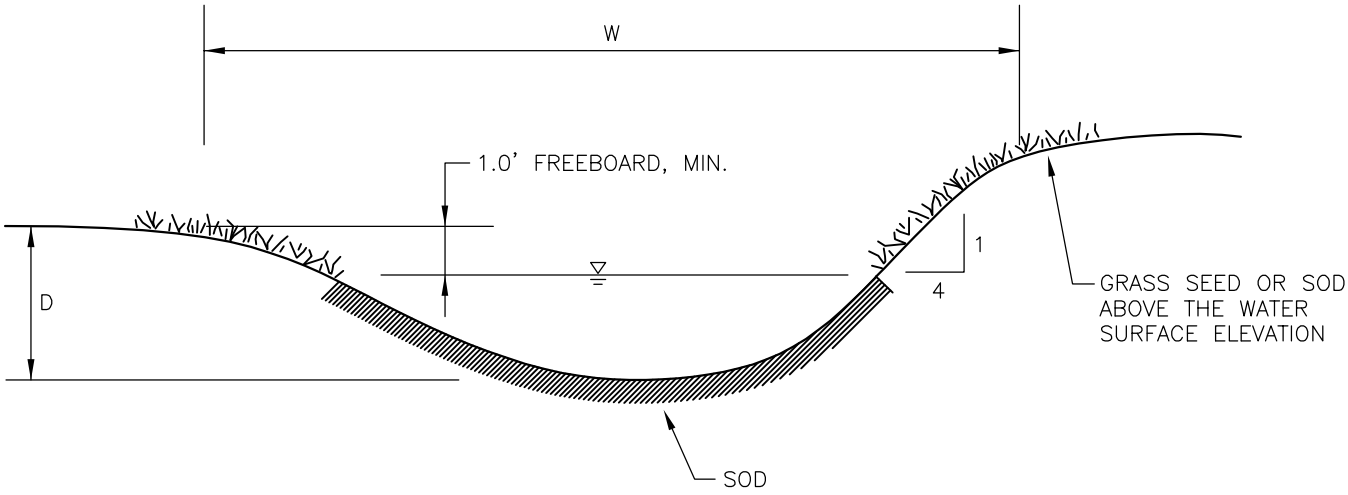

TYPICAL SECTION

NOTES:

1. D, W SIZED TO ACCOMMODATE DESIGN FLOW.
2. ROUND ALL CORNERS FOR EASE OF MOWING.
3. MAXIMUM DESIGN VELOCITY SHALL BE 4 F.P.S.
4. LOCATE ALL SEDIMENT TRAPS FOR EASE OF MAINTENANCE.

City of Bellevue

STORM AND SURFACE WATER UTILITY

TITLE

GRASS-LINED DITCH

JANUARY 2017

NO SCALE

NO. D-36

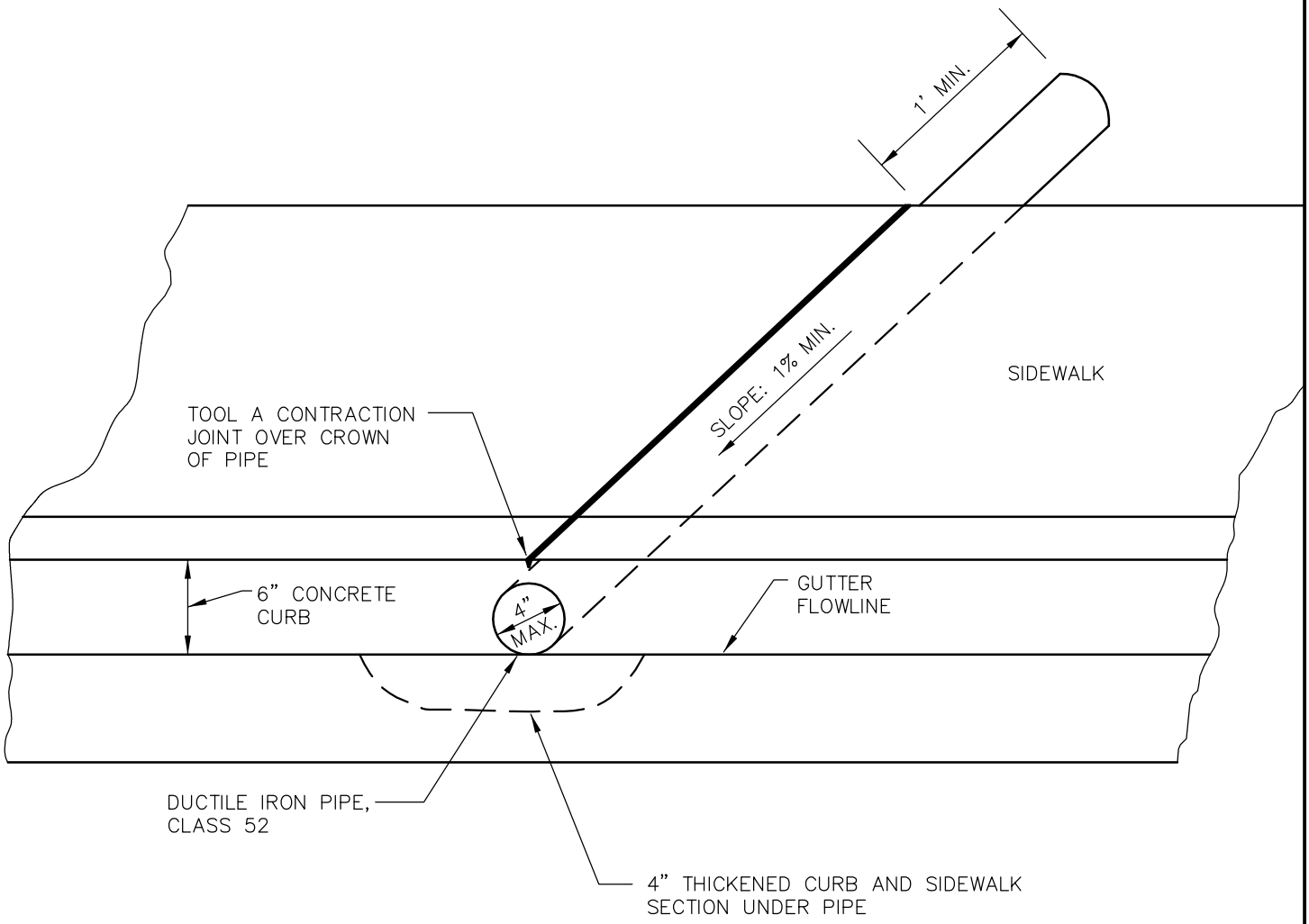

NOTES:

1. SINGLE FAMILY RESIDENTIAL CONSTRUCTION ONLY.
2. REQUIRES RIGHT-OF-WAY APPROVAL.
3. PIPE AND CONTRACTION JOINT RUN PERPENDICULAR TO SIDEWALK.

City of Bellevue

STORM AND SURFACE WATER UTILITY

TITLE

SIDEWALK DRAIN

JANUARY 2017

NO SCALE

NO. D-37

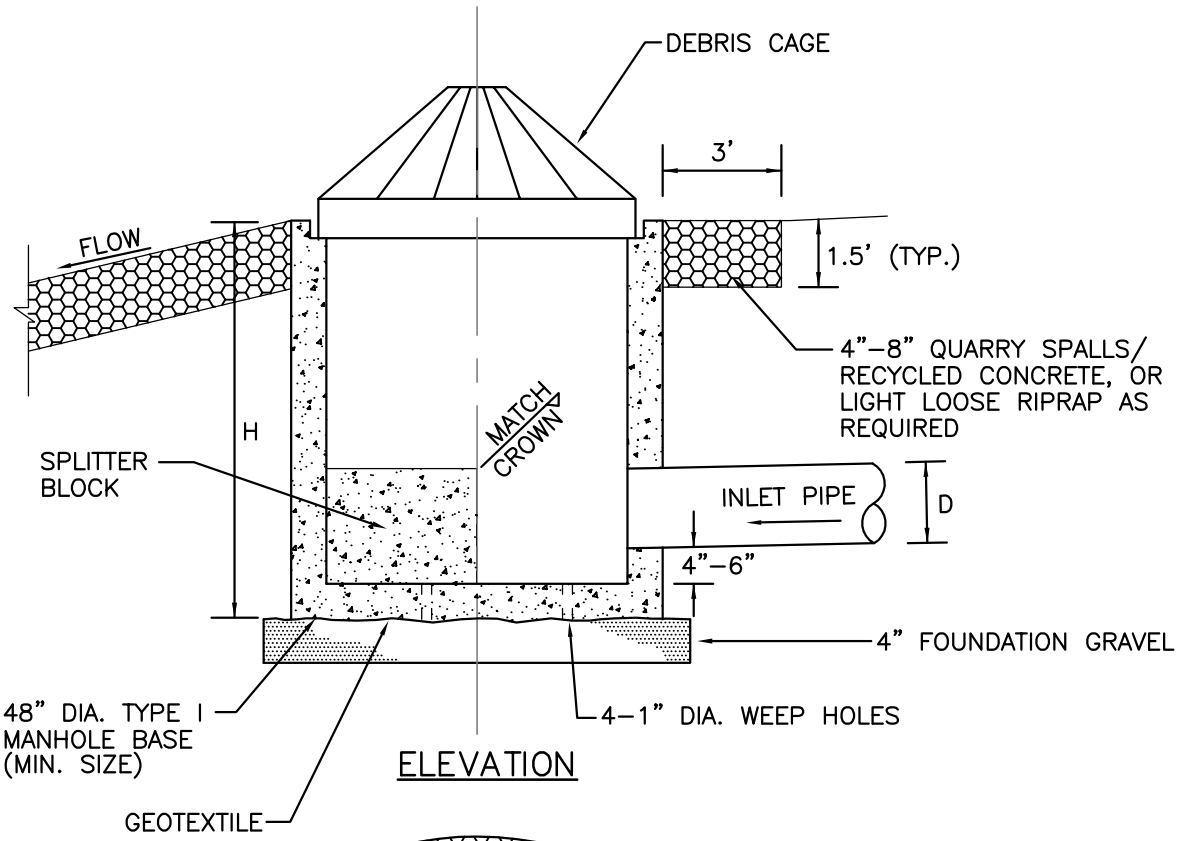

ELEVATION

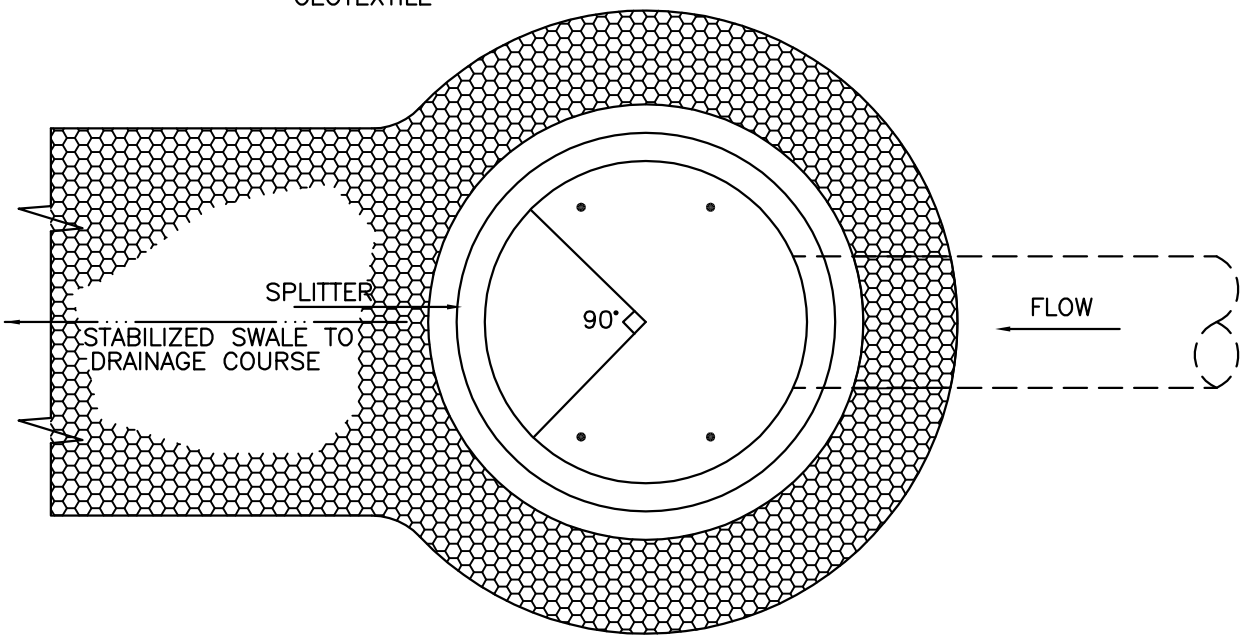

PLAN

INLET PIPE SIZE "D"	BASE HEIGHT "H"
8"	2'
12"	3'
18"	3'
24"	4'

City of Bellevue

STORM AND SURFACE WATER UTILITY

TITLE

ENERGY DISSIPATOR

JANUARY 2017

NO SCALE

NO. D–38

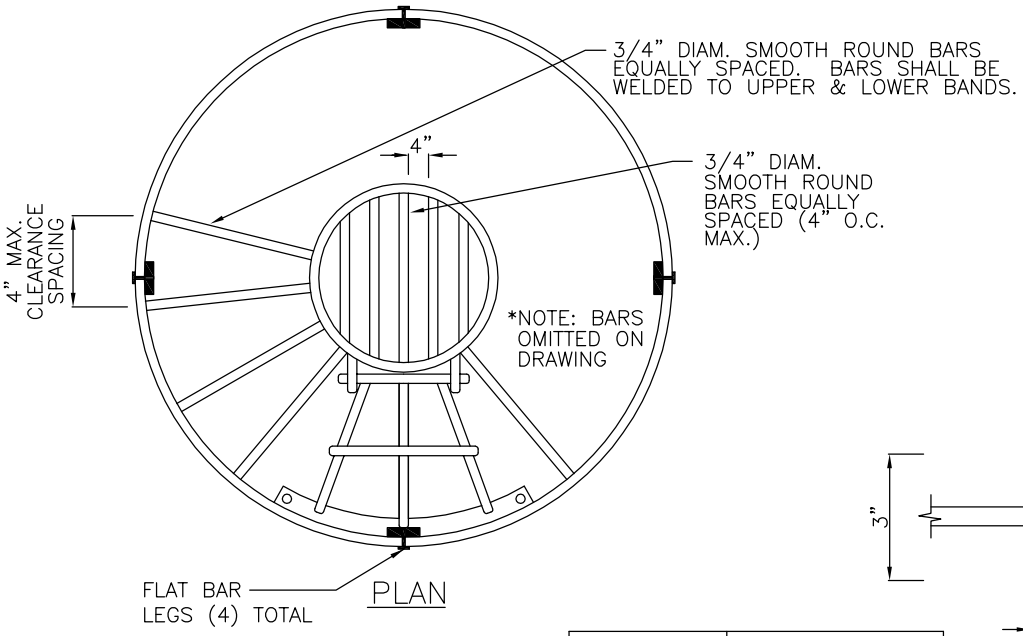

PLAN

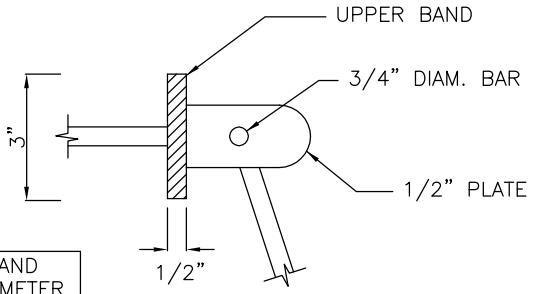

MH	UPPER BAND OUTER DIAMETER
48",54"	36"
60",72"	42"
96"	48"

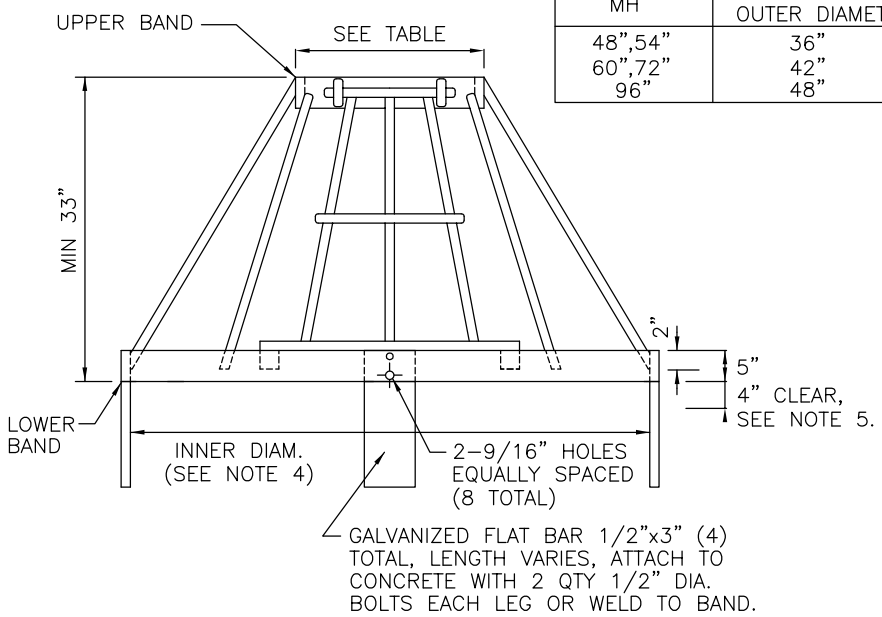

ELEVATION

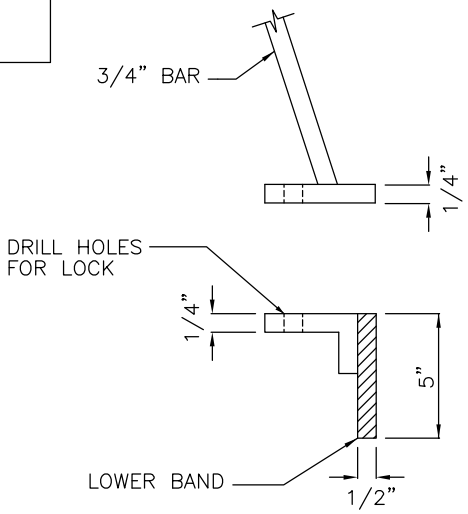

ENTRY GATE DETAIL

NOTES:

1. ALL STEEL IN PLATES, BARS AND BANDS SHALL CONFORM TO THE REQUIREMENTS OF ASTM A36.
2. STEEL DEBRIS CAGE SHALL BE HOT-DIP GALVANIZED IN ACCORDANCE WITH ASTM A123 (AASHTO M111).
3. ALUMINUM IS AN OPTIONAL CAGE MATERIAL AND MUST BE BOLTED TO THE CONCRETE STRUCTURE.
4. LOWER BAND DIMENSIONS TO MATCH STRUCTURE.
5. PROVIDE 4" CLEARANCE BETWEEN LOWER BAND AND THE TOP OF THE CONCRETE STRUCTURE.

City of Bellevue

STORM AND SURFACE WATER UTILITY

TITLE

DEBRIS CAGE

JANUARY 2017

NO SCALE

NO. D-39

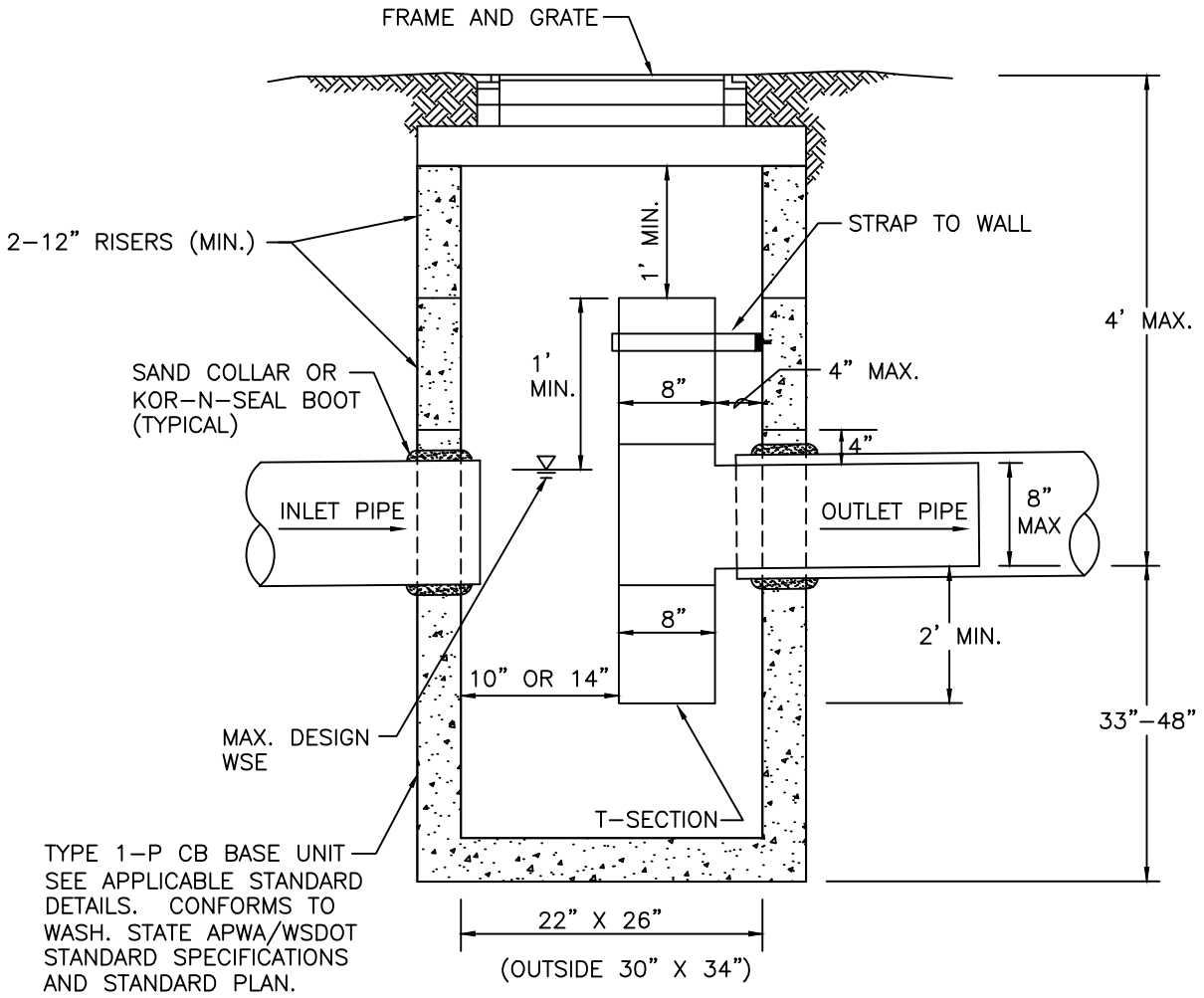

NOTES:

1. MAX. OUTLET PIPE DIAMETER IS 8 INCHES. VERTICAL RISER SECTION SHALL BE ALIGNED PLUMB VERTICALLY. HORIZONTAL RISER SECTION SHALL MATCH OUTLET PIPE SLOPE.
2. ALL METAL PARTS AND SURFACES MUST BE CORROSION RESISTANT. STEEL HARDWARE SHALL BE GALVANIZED. PIPES SHALL BE GALVANIZED, ASPHALT COATED (TREATMENT 1) OR ALUMINIZED. COMPLETE CORROSION PROTECTION MUST BE ASSURED.
3. APPLY NON–SHRINK GROUT TO INSIDE AND OUTSIDE OF ALL JOINTS, RINGS, RISERS AND FRAMES.
4. PENETRATE CARRIER PIPE THROUGH WALL.
5. USE APPROVED WATERTIGHT STRUCTURE ADAPTOR.
6. SLIP SMOOTH–BORE HORIZONTAL LEG OF FLOW CONTROL TEE INSIDE CARRIER PIPE.
7. NO FLOW CONTROL JOINT OUTSIDE OF STRUCTURE.

JANUARY 2017 NO SCALE

City of Bellevue

STORM AND SURFACE WATER UTILITY

TITLE

SPILL CONTROL (SC) SEPARATOR
TYPE I

NO. D–42

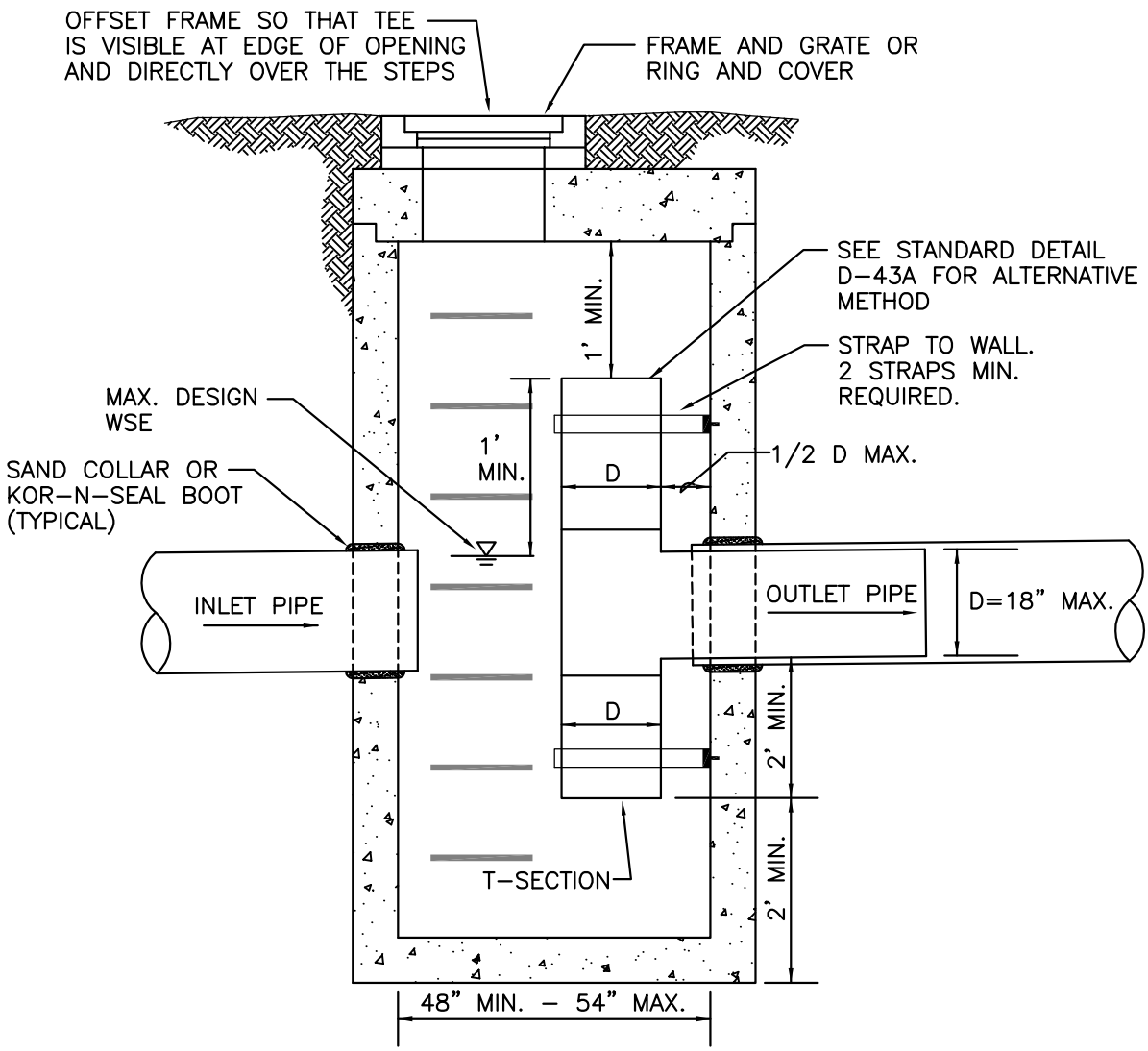

NOTES:

1. MAX. OUTLET PIPE DIAMETER IS 18 INCHES. VERTICAL RISER SECTION SHALL BE ALIGNED PLUMB VERTICALLY. HORIZONTAL SECTION SHALL MATCH OUTLET PIPE SLOPE.
2. ALL METAL PARTS AND SURFACES MUST BE CORROSION RESISTANT. STEEL HARDWARE SHALL BE GALVANIZED. PIPES SHALL BE GALVANIZED, ASPHALT COATED (TREATMENT 1) OR ALUMINIZED. COMPLETE CORROSION PROTECTION MUST BE ASSURED.
3. APPLY NON-SHRINK GROUT TO INSIDE AND OUTSIDE OF JOINTS, RINGS, RISERS AND FRAMES.
4. PENETRATE CARRIER PIPE THROUGH VAULT WALL.
5. USE APPROVED WATERTIGHT STRUCTURE ADAPTOR.
6. SLIP SMOOTH-BORE HORIZONTAL LEG OF FLOW CONTROL TEE INSIDE CARRIER PIPE.
7. NO FLOW CONTROL JOINT OUTSIDE OF STRUCTURE.

OUTLET PIPE DIA. "D"	STRUCTURE TYPE
12"	TYPE 2 CB-48"
18"	TYPE 2 CB-54"

City of Bellevue

STORM AND SURFACE WATER UTILITY

TITLE

SPILL CONTROL (SC) SEPARATOR TYPE 2

JANUARY 2017

NO SCALE

NO. D-43

SECTION VIEW

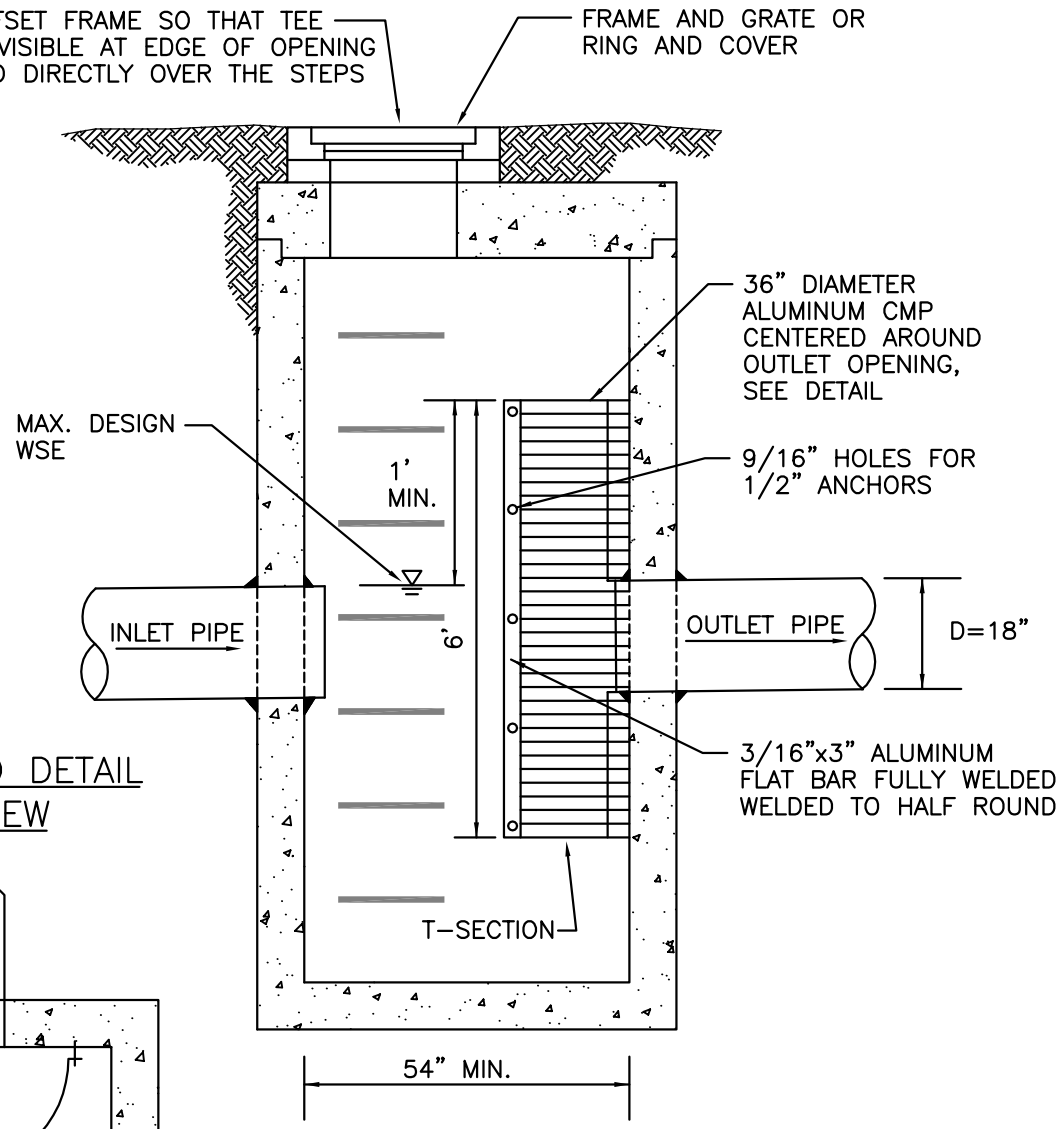

HALF ROUND DETAIL
PLAN VIEW

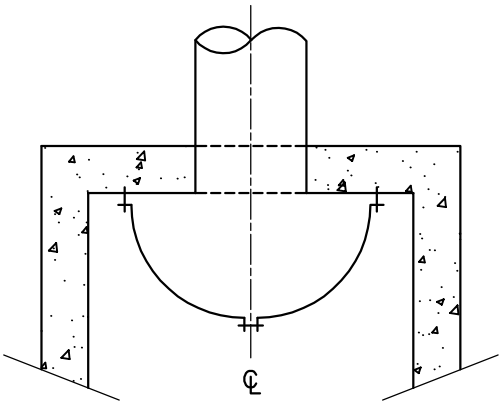

NOTES:

1. ALL METAL PARTS AND SURFACES MUST BE CORROSION RESISTANT. STEEL HARDWARE SHALL BE GALVANIZED. PIPES SHALL BE GALVANIZED, ASPHALT COATED (TREATMENT 1) OR ALUMINIZED. COMPLETE CORROSION PROTECTION MUST BE ASSURED.
2. APPLY NON-SHRINK GROUT TO INSIDE AND OUTSIDE OF JOINTS, RINGS, RISERS AND FRAMES.
3. TYPE 3 SC SEPARATOR CAN BE USED AS AN ALTERNATE TO STANDARD DETAIL D-43 SC SEPARATOR TYPE 2 WHEN A TYPE 2 WILL NOT WORK DUE TO EXISTING CONSTRAINTS.
3. FASTEN HALF ROUND TO CATCH BASIN WALL QUICK BOLTS.

City of Bellevue

STORM AND SURFACE WATER UTILITY

TITLE

SPILL CONTROL (SC) SEPARATOR TYPE 3

JANUARY 2017

NO SCALE

NO. D-43A

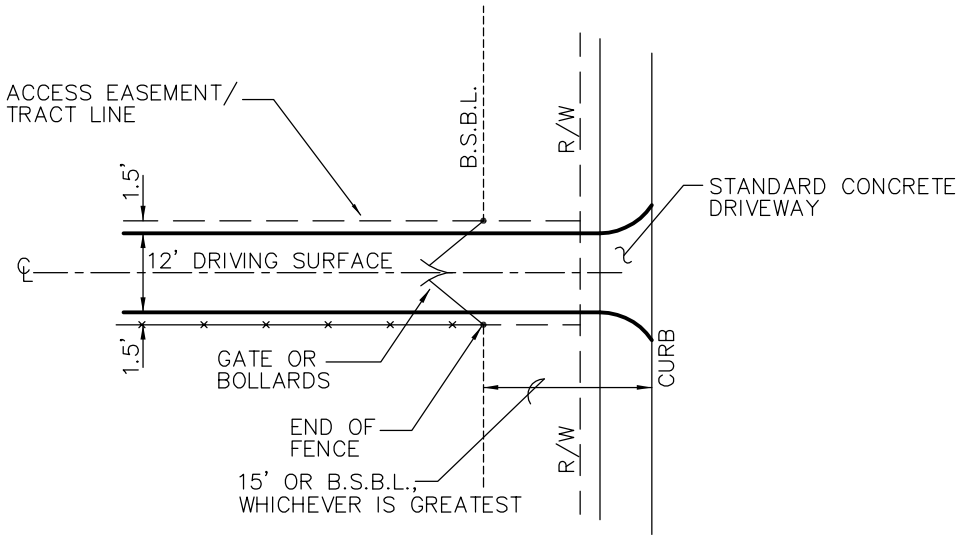

DRIVEWAY ENTRANCE

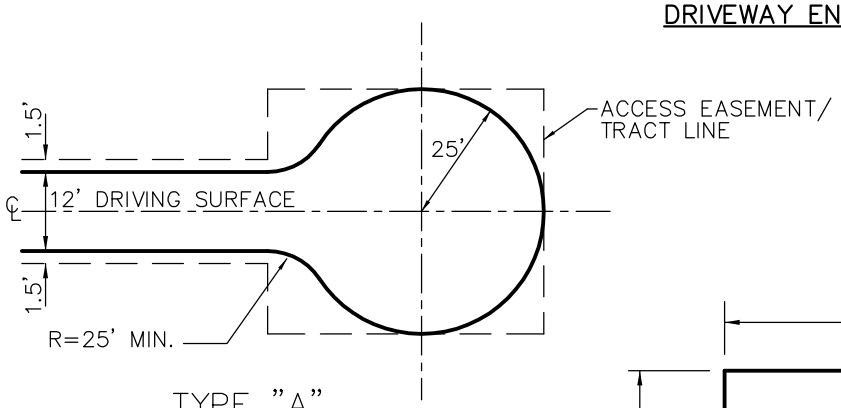

TYPE "A"
TURNAROUND

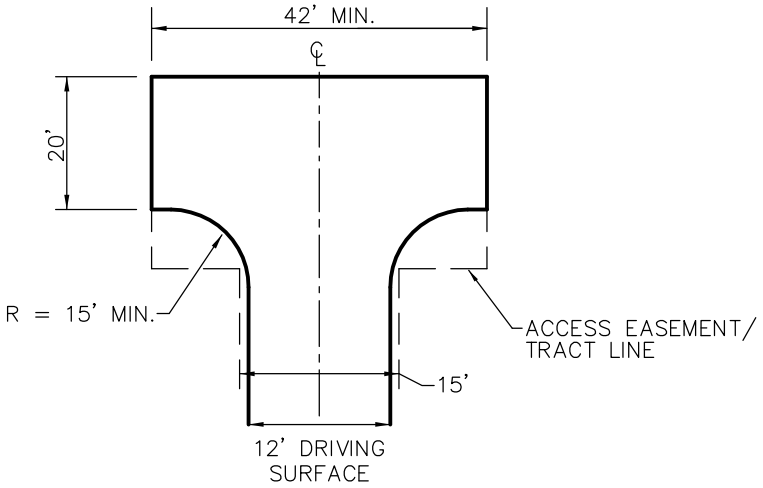

HAMMERHEAD

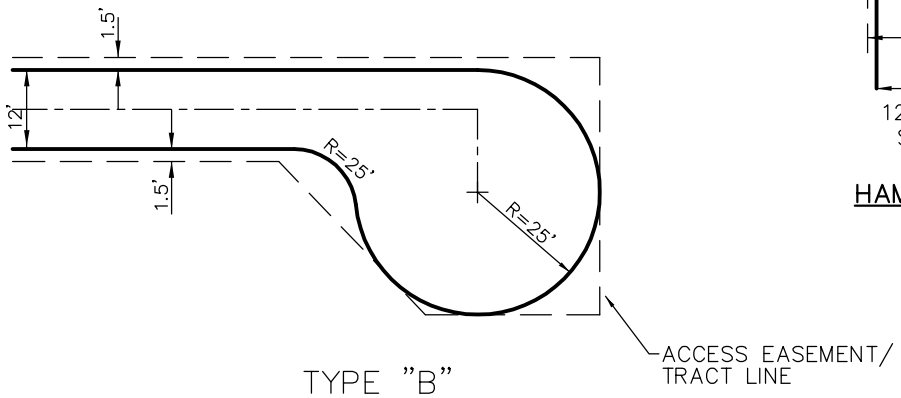

TYPE "B"
TURNAROUND

City of Bellevue

STORM AND SURFACE
WATER UTILITY

TITLE

DRAINAGE FACILITY
MAINTENANCE ACCESS

JANUARY 2017

NO SCALE

NO. D-44

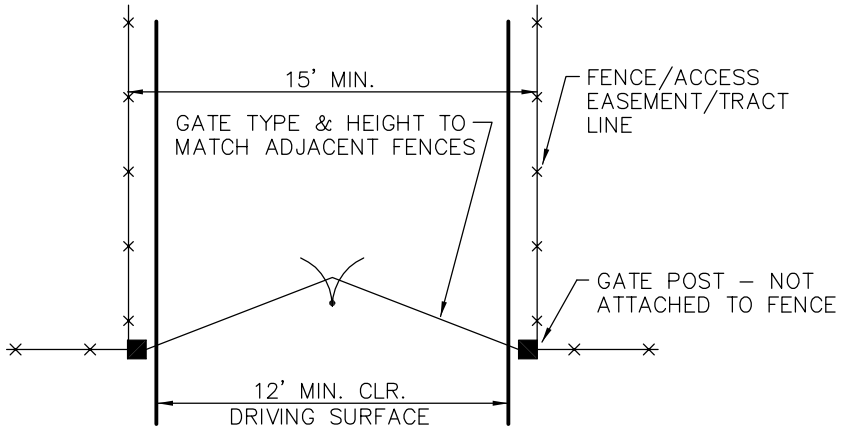

GATE PLACEMENT

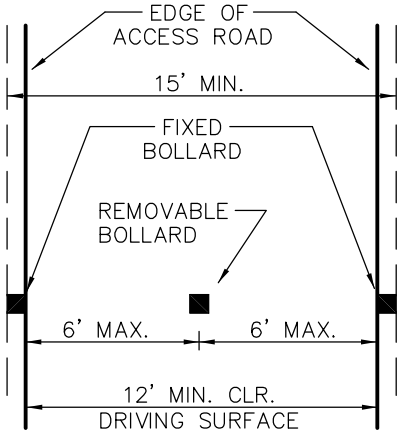

BOLLARD PLACEMENT

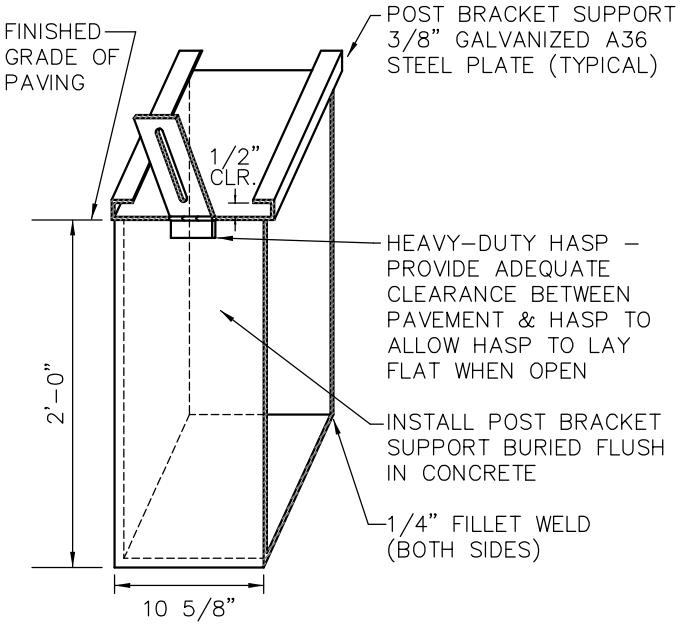

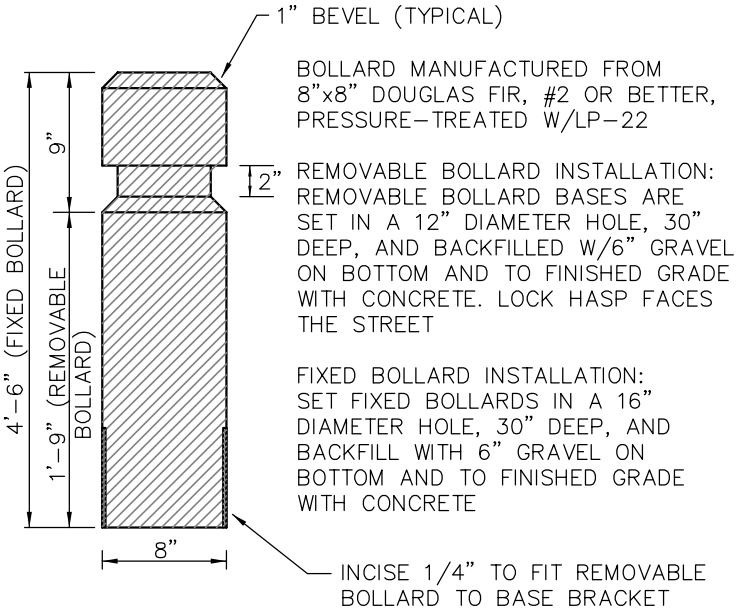

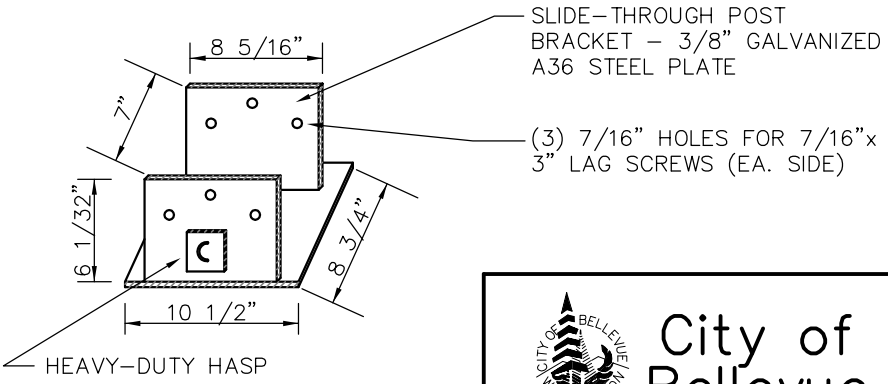

City of Bellevue

STORM AND SURFACE WATER UTILITY

TITLE

GATE/BOLLARD PLACEMENT

JANUARY 2017

NO SCALE

NO. D-45

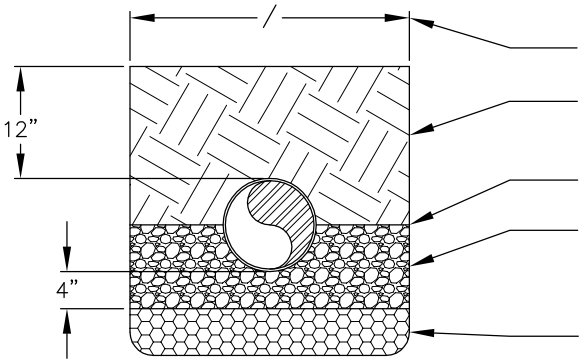

RIGID PIPE BEDDING

SEE NOTE 1.

COMPACTED BACKFILL (COMPACTED DENSITY PERCENTAGE PER STANDARD DETAIL D–25).

SPRING LINE

COMPACTED BEDDING GRAVEL PER SECTION 9–03.12(3), "GRAVEL BACKFILL FOR PIPE ZONE BEDDING", OF THE WSDOT STANDARD SPECIFICATION, OR OTHER MATERIAL IF SPECIFIED.

FOUNDATION GRAVEL, IF REQUIRED (SEE NOTE 2).

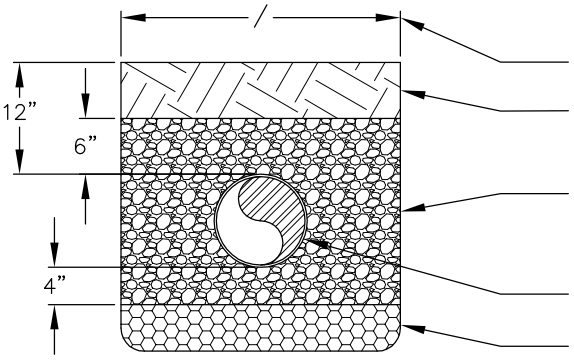

FLEXIBLE PIPE BEDDING

SEE NOTE 1.

COMPACTED BACKFILL (COMPACTED DENSITY PERCENTAGE PER STANDARD DETAIL D–25).

COMPACTED BEDDING GRAVEL PER SECTION 9–03.12(3), "GRAVEL BACKFILL FOR PIPE ZONE BEDDING", OF THE WSDOT STANDARD SPECIFICATION, OR OTHER MATERIAL IF SPECIFIED.

PVC PIPE

FOUNDATION GRAVEL, IF REQUIRED (SEE NOTE 2).

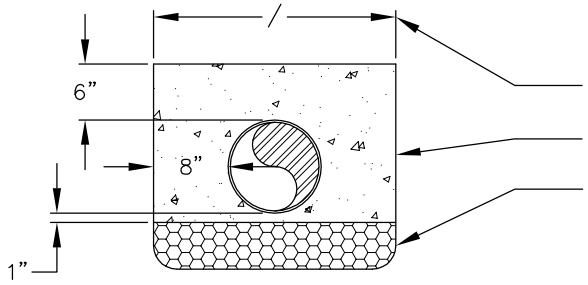

CONCRETE ENCASEMENT

SEE NOTE 1.

2000 P.S.I. CONCRETE (SEE NOTE 3)

FOUNDATION GRAVEL, IF REQUIRED (SEE NOTE 2).

DETENTION PIPES WITH UNDERDRAINS

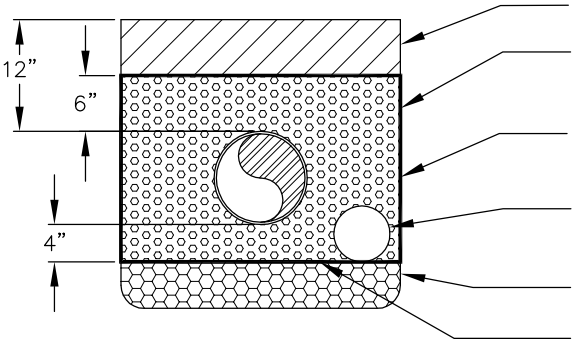

RIGID OR FLEXIBLE PIPE BEDDING (PER ABOVE).

GEOTEXTILE WRAP AROUND GRAVEL BACKFILL. PROVIDE 12" MIN. OVERLAP AT SEAMS.

1" WASHED ROCK FROM BOTTOM OF UNDERDRAIN PIPE TO CROWN OF DETENTION PIPE.

UNDERDRAIN PIPE (TYP.) 6" MIN. PERF. PER STANDARDS (SEE NOTE 5).

FOUNDATION GRAVEL, IF REQUIRED (SEE NOTE 2).

PERMEABLE GEOTEXTILE WRAP.

NOTES:

1. MAXIMUM WIDTH OF TRENCH AT TOP OF PIPE: – 36" FOR PIPE UP TO AND INCLUDING 18" NOMINAL DIAMETER.
   – I.D. PLUS 18" FOR PIPE LARGER THAN 18" NOMINAL DIAMETER.
2. EXCAVATE UNSTABLE MATERIAL DOWN TO FIRM SOIL AND REPLACE WITH FOUNDATION GRAVEL PER SECTION 9–03.9(3), "BALLAST", OF THE WSDOT STANDARD SPECIFICATIONS.
3. THE CONTRACTOR SHALL BE RESPONSIBLE FOR ANCHORING PIPE TO PREVENT FLOTATION DURING CONCRETE PLACEMENT.
4. COMPACTED CRUSHED SURFACING PER SECTION 9–03.9(3), "CRUSHED SURFACING", OF THE WSDOT STANDARD SPECIFICATIONS CAN ALSO BE USED AS BEDDING GRAVEL.
5. PROVIDE CLEANOUTS ON UNDERDRAIN PIPE, EVERY 100 FEET, AND AT BENDS OR JUNCTIONS.

JANUARY 2017 NO SCALE

City of Bellevue

STORM AND SURFACE WATER UTILITY

TITLE

PIPE BEDDING

NO. D–46

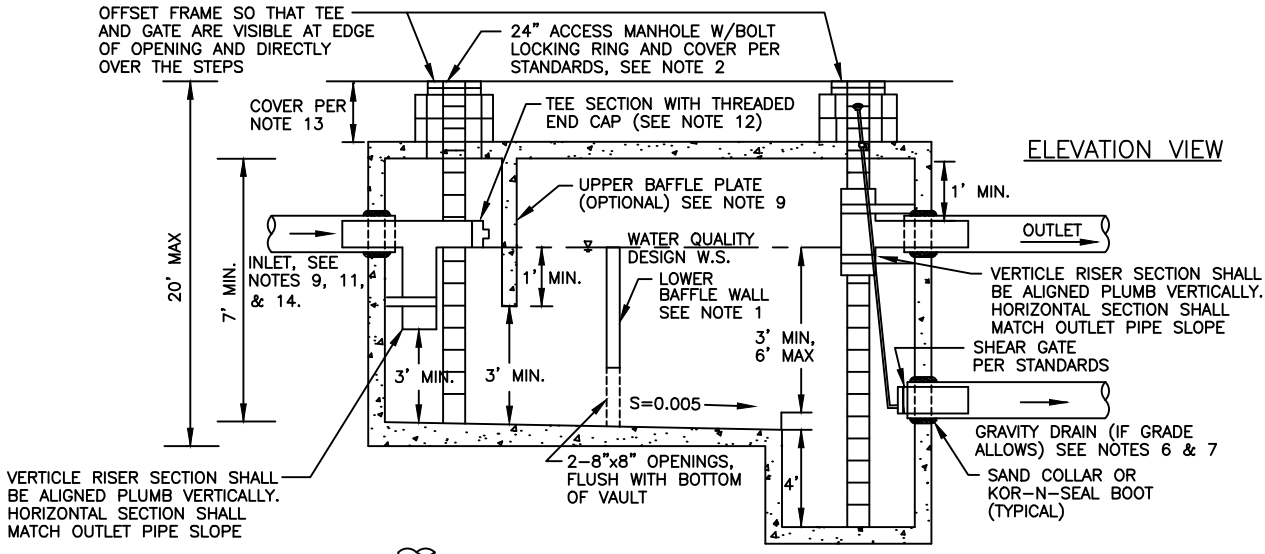

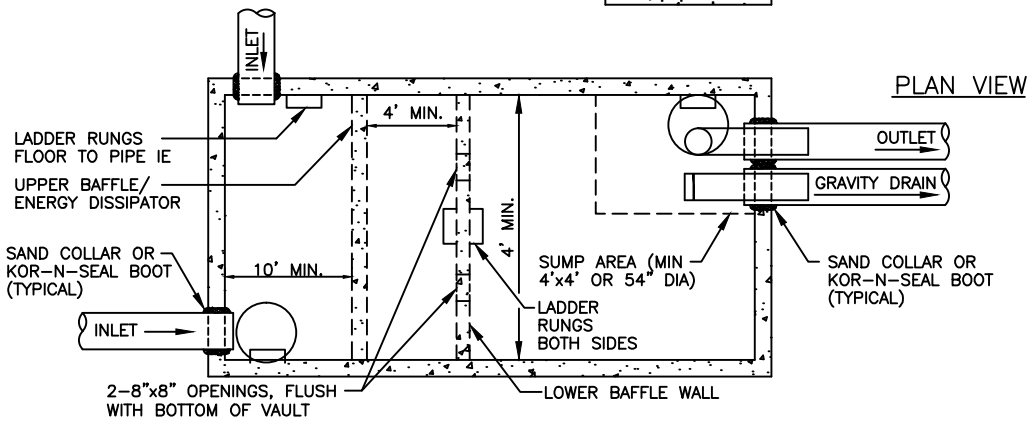

NOTES:

1. LOWER BAFFLE WALL TO DIVIDE VAULT INTO TWO CELLS WITH FIRST CELL (FOREBAY) TO OCCUPY 25% OF VAULT SURFACE AREA. ALL INLET PIPES MUST DISCHARGE TO FOREBAY.
2. MINIMUM ONE ACCESS MANHOLE PER CELL WITH AT LEAST ONE ACCESS PER 50' OF VAULT LENGTH OR WIDTH.
3. PRE-CAST VAULTS SHALL HAVE APPROVED RUBBER GASKET SYSTEM.
4. VAULT SHALL BE DESIGNED AND STAMPED BY A REGISTERED STRUCTURAL ENGINEER. VAULT SHALL BE DESIGNED FOR HS-20 TRAFFIC LOADING, MIN.
5. ALL METAL PARTS SHALL BE CORROSION RESISTANT.
6. GRAVITY DRAIN SHOULD BE SIZED TO EMPTY VAULT IN 4 HOURS.
7. PUMP STANDPIPE REQUIRED IF VAULT IS NOT EQUIPPED WITH GRAVITY DRAIN. TO ENABLE VAULT TO BE DRAINED FOR MAINTENANCE OPERATIONS, ONE STANDPIPE IS REQUIRED FOR EVERY 35,000 CF OF DEAD STORAGE. SEE SUMP WITH RISER PIPE DETAIL.
8. PROVIDE LADDER RUNGS IMMEDIATELY ADJACENT TO INLET PIPES.
9. UPPER BAFFLE PLATE MAY BE USED IN LIEU OF TEE SECTION ON INLET PIPES.
10. FLOW SPLITTER/BYPASS REQUIRED UPSTREAM OF WET VAULT TO DIVERT FLOWS THAT EXCEED THE PEAK FLOW FOR THE WATER QUALITY DESIGN STORM AROUND THE WET VAULT. BYPASS STRUCTURE MUST BE EQUIPPED WITH SHUT OFF MECHANISM TO ENABLE THE VAULT TO BE TAKEN OFF LINE FOR MAINTENANCE.
11. TEES SHALL BE ORIENTED VERTICALLY WITHIN THE VAULT, REGARDLESS OF THE SLOPE OF THE INCOMING PIPE.
12. ADAPTER FOR THREADED END CAP SHALL BE SECURED TO TEE WITH SCREWS.
13. IF PROPOSED COVER IS GREATER THAN 1', THEN IT MUST BE 2.5' MINIMUM AND ACCESS MUST BE 48" ECCENTRIC CONE, SET OVER 24" DIAMETER ACCESS OPENING.
14. INVERT ELEVATION OF INLET PIPE SHALL BE PER DESIGN ENGINEER'S CALCULATIONS.
15. ALL PIPES SHALL BE PERPENDICULAR TO FACE OF VAULT.
16. APPLY NON-SHRINK GROUT TO INSIDE AND OUTSIDE OF ALL JOINTS, RINGS, RISERS AND FRAMES.
17. PENETRATE CARRIER PIPE THROUGH VAULT WALL.
18. USE APPROVED WATERTIGHT STRUCTURE ADAPTOR.
19. SLIP SMOOTH-BORE HORIZONTAL LEG OF FLOW CONTROL TEE INSIDE CARRIER PIPE.
20. NO FLOW CONTROL JOINT OUTSIDE OF STRUCTURE.
21. PRIOR TO STARTUP, RUNOFF TREATMENT VAULT (WET VAULT) SHALL PASS 1% PER DAY LEAK TEST WHERE A MAXIMUM OF 1% WATER LOSS IS ALLOWED WITHIN A 24-HOUR PERIOD WITH VAULT FILLED TO 2-YEAR STORM ELEVATION. TEST PER THE UNIFORM PLUMBING CODE 712.2.

City of Bellevue

STORM AND SURFACE WATER UTILITY

TITLE

RUNOFF TREATMENT VAULT (WET VAULT)

JANUARY 2017 NO SCALE

NO. D-47

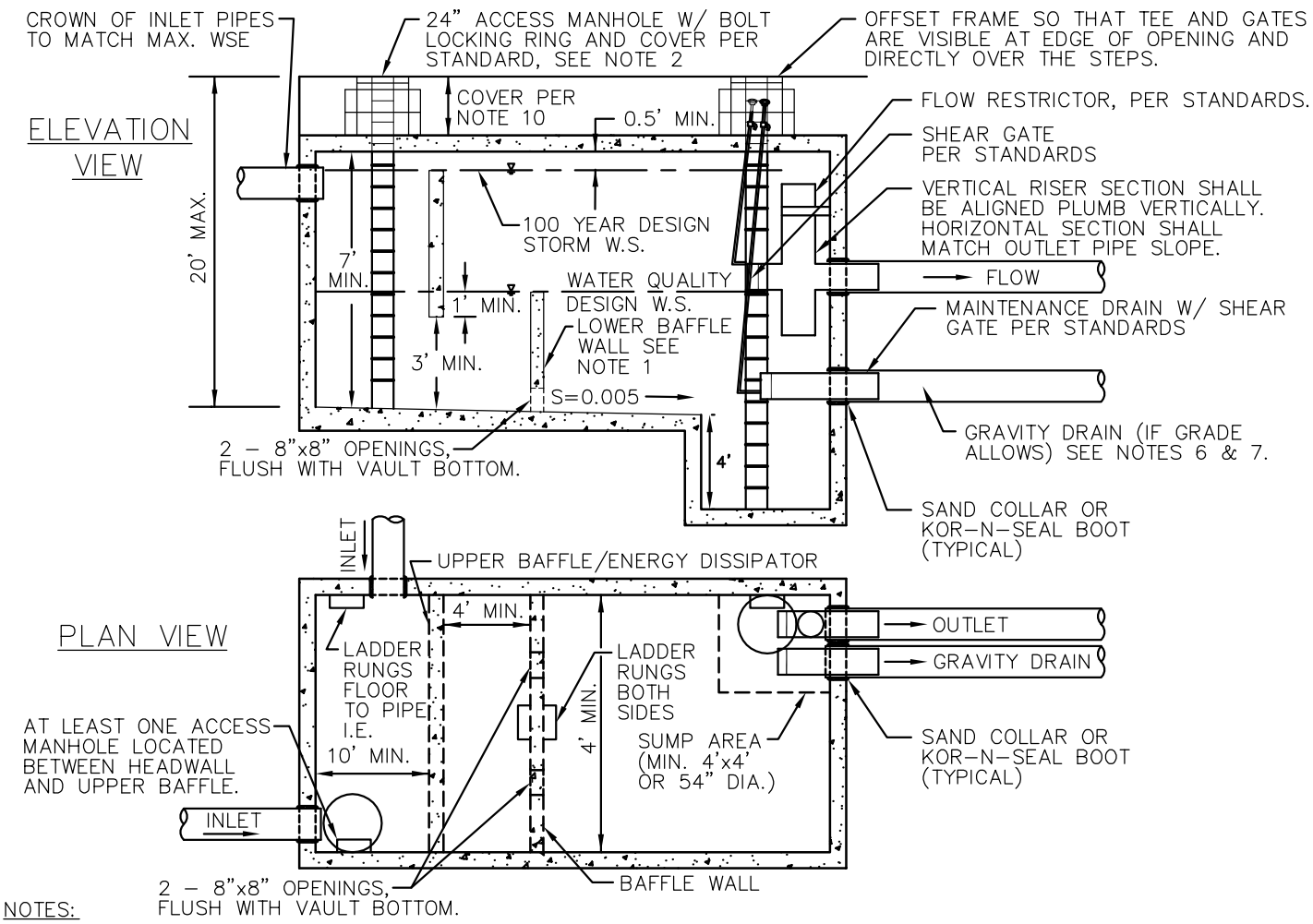

NOTES:

1. LOWER BAFFLE WALL TO DIVIDE VAULT INTO TWO APPROXIMATELY EQUAL SIZE CELLS. UPPER BAFFLE SET AT 25% OF VAULT SURFACE AREA (10' MINIMUM FROM HEADWALL.)
2. MINIMUM ONE ACCESS MANHOLE PER CELL WITH AT LEAST ONE ACCESS PER 50' VAULT LENGTH OR WIDTH.
3. PROVIDE WATER STOP AT ALL CAST-IN-PLACE CONSTRUCTION JOINTS. PRE-CAST VAULTS SHALL HAVE APPROVED RUBBER GASKET SYSTEM.
4. VAULT SHALL BE DESIGNED AND STAMPED BY A REGISTERED STRUCTURAL ENGINEER. VAULT SHALL BE DEISGNED FOR HS-20 TRAFFIC LOADINGS, MINIMUM.
5. ALL METAL PARTS SHALL BE CORROSION RESISTANT.
6. GRAVITY DRAIN SHOULD BE SIZED TO EMPTY VAULT IN 4 HOURS.
7. PUMP STANDPIPE REQUIRED IF VAULT IS NOT EQUIPPED WITH GRAVITY DRAIN. TO ENABLE VAULT TO BE DRAINED FOR MAINTENANCE OPERATIONS, ONE STANDPIPE IS REQUIRED FOR EVERY 35,000 CF OF DEAD STORAGE. SEE SUMP WITH RISER PIPE DETAIL.
8. PROVIDE LADDER RUNGS IMMEDIATELY ADJACENT TO ALL INLET/OUTLET PIPES.
9. ALL INLETS MUST DISCHARGE UPSTREAM OF UPPER BAFFLE.
10. IF PROPOSED COVER IS GREATER THAN 1', THEN IT MUST BE 2.5' MINIMUM AND ACCESS MUST BE 48" ECCENTRIC CONE, SET OVER 24" DIAMETER ACCESS OPENING.
11. ALL PIPES SHALL BE PERPENDICULAR TO FACE OF VAULT.
12. APPLY NON-SHRINK GROUT TO INSIDE AND OUTSIDE OF ALL JOINTS, RINGS, RISER AND FRAMES.
13. PENETRATE CARRIER PIPE THROUGH VAUL WALL.
14. USE APPROVED WATERTIGHT STRUCTURE ADAPTOR.
15. SLIP SMOOTH-BORE HORIZONTAL LEG OF FLOW CONTROL TEE INSIDE CARRIER PIPE.
16. NO FLOW CONTROL JOINT OUTSIDE OF STRUCTURE.
17. PRIOR TO STARTUP, COMBINED VAULT (DETENTION AND RUNOFF TREATMENT) SHALL PASS 1% PER DAY LEAK TEST WHERE A MAXIMUM OF 1% WATER LOSS IS ALLOWED WITHIN A 24-HOUR PERIOD WITH VAULT FILLED TO 2-YEAR STORM ELEVATION TEST PER THE UNIFORM PLUMBING CODE 712.2.

JANUARY 2017 NO SCALE

City of Bellevue

STORM AND SURFACE WATER UTILITY

TITLE

COMBINED VAULT
(DETENTION AND RUNOFF TREATMENT)

NO. D-48

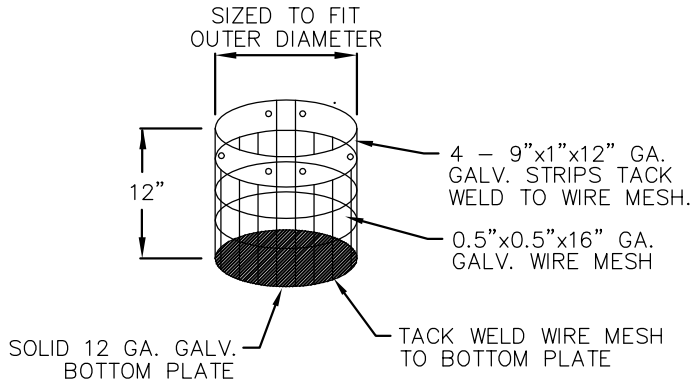

SCREEN

NOTE:
ATTACH SCREEN TO CMP CROSS W/ 6 1" GALVANIZED METAL SCREWS–2 PER STRAP, OR USE STAINLESS STEEL PIPE CLAMP

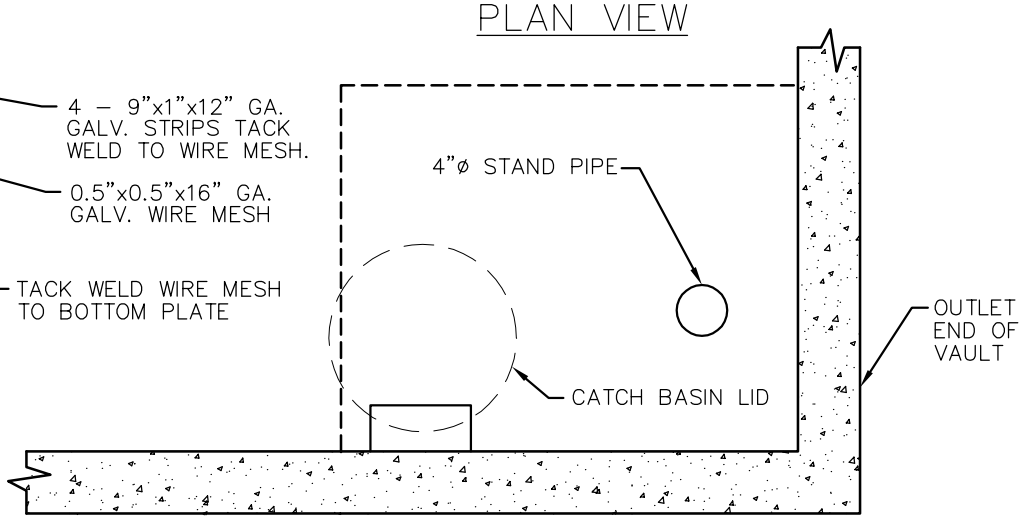

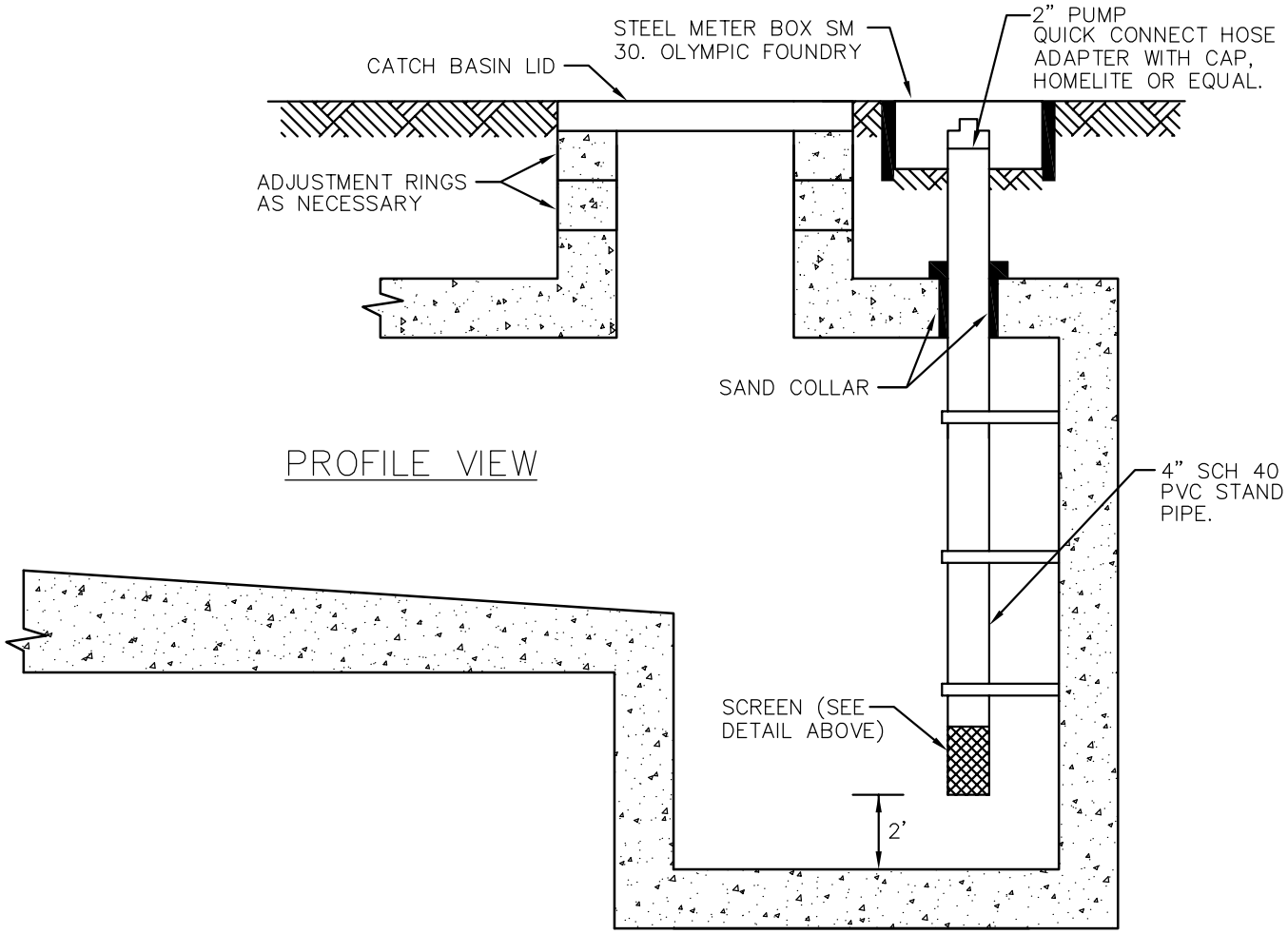

NOTE:
TO BE USED ONLY WHEN ALLOWED BY THE CITY

City of Bellevue

STORM AND SURFACE WATER UTILITY

TITLE

SUMP WITH RISER PIPE

JANUARY 2017

NO SCALE

NO. D–49

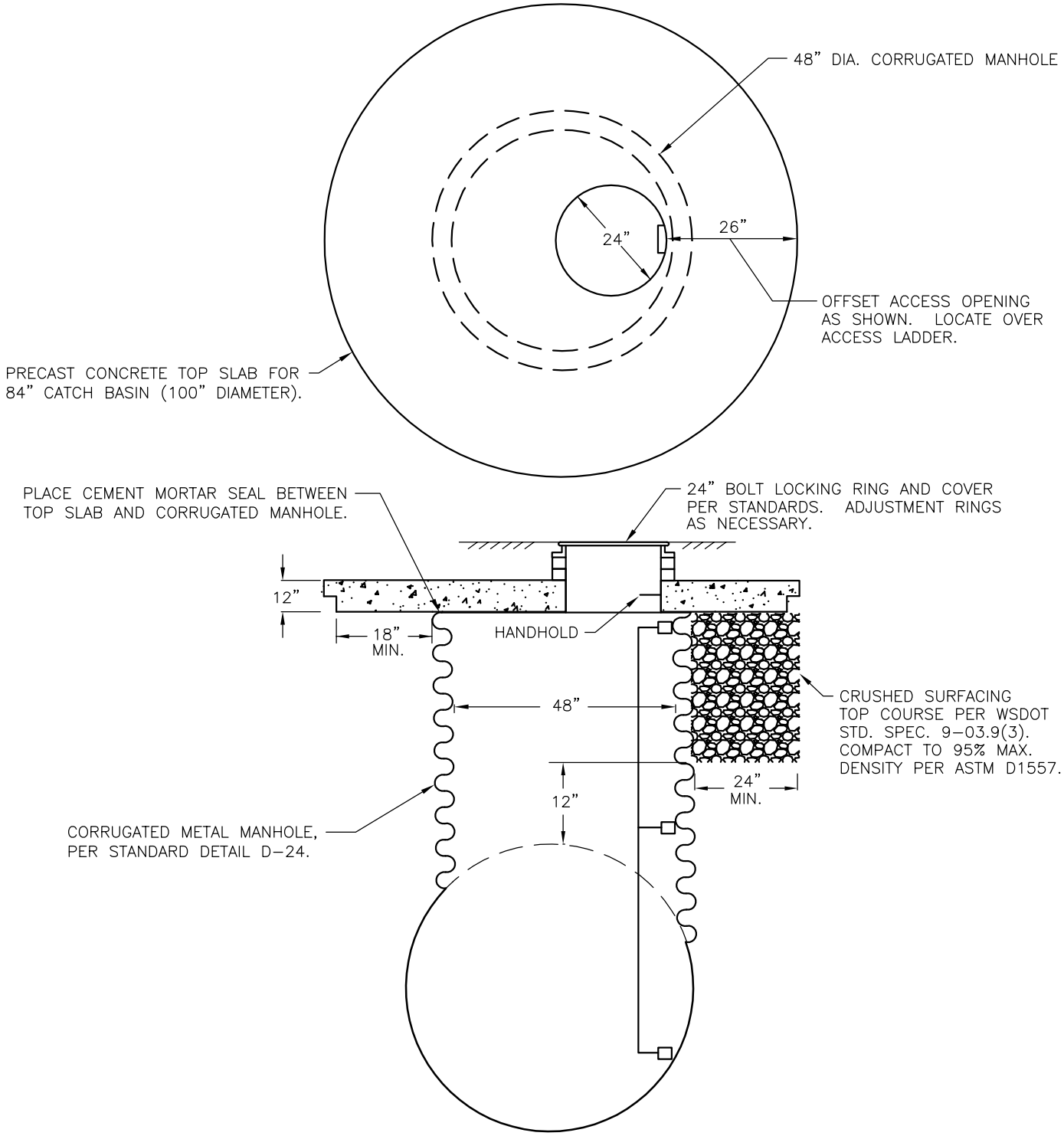

ECCENTRIC SECTION

NOTES:

1. TOP SLAB SHALL BE RATED FOR HS-20 LOADING.
2. APPLY NON-SHRINK GROUT TO INSIDE AND OUTSIDE OF ALL JOINTS, RINGS, RISERS AND FRAMES.
3. LADDER SHALL BE WELDED TO INSIDE OF MANHOLE. FIELD APPLY ASPHALT COATING TO WELDS.

JANUARY 2017 NO SCALE

City of Bellevue

STORM AND SURFACE WATER UTILITY

TITLE

TRAFFIC BEARING ACCESS FOR CORRUGATED METAL MANHOLE

NO. D-51

OUTSIDE OF R.O.W OR EASEMENT

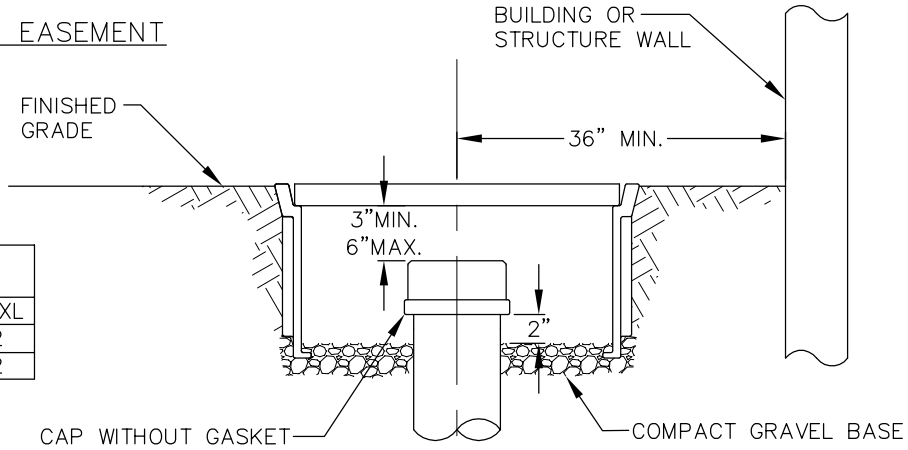

C.O. PIPE DIAMETER	MID-STATES PLASTIC BOX
4"	MSBCF-1118-18XL
6"	MSBCF-1324-12
8"	MSBCF-1730-12

RIGHT-OF-WAY OR EASEMENT

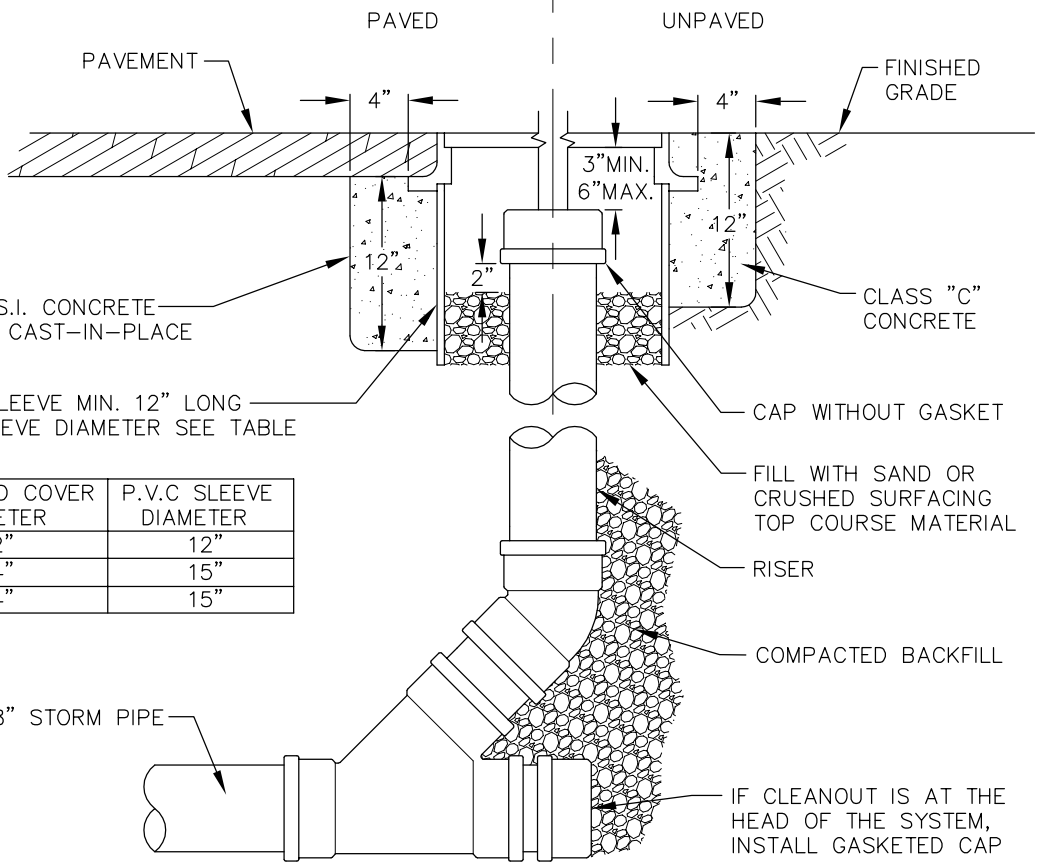

C.O. PIPE DIAMETER	RING AND COVER DIAMETER	P.V.C SLEEVE DIAMETER
4"	12"	12"
6"	14"	15"
8"	14"	15"

NOTES:

1. BOLT-LOCKING CAST IRON RING AND COVER SHALL BE USED IN RIGHT-OF-WAY AND EASEMENTS AND MUST BE RATED HS-20 IF USED IN PAVED AREAS. SEE TABLE FOR SIZES.
2. MID-STATES PLASTIC BOX OR EQUAL MAY BE USED IF C.O. IS OUTSIDE OF RIGHT-OF-WAY OR EASEMENT. SEE TABLE FOR SIZES. THE COVER FOR THE PLASTIC BOX SHALL BE DUCTILE IRON AND READ "DRAIN" OR BE BLANK (NO LABEL).
3. CAST IRON COVER SHALL READ "DRAIN."
4. LOCKING BOLTS SHALL BE 5/8"-11 N.C. 304 STAINLESS STEEL SOCKET (ALLEN) HEAD, 2" LONG.
5. 14" BOLT-LOCKING CAST IRON COVER SHALL BE EQUAL TO INLAND FOUNDRY NUMBER 209, OR 210.
6. SPECIAL "DECORATIVE" CASTING MAY BE USED IF PREAPPROVED BY CITY.

City of Bellevue

STORM AND SURFACE WATER UTILITY

TITLE

CLEANOUT TO GRADE

JANUARY 2017

NO SCALE

NO. D-52

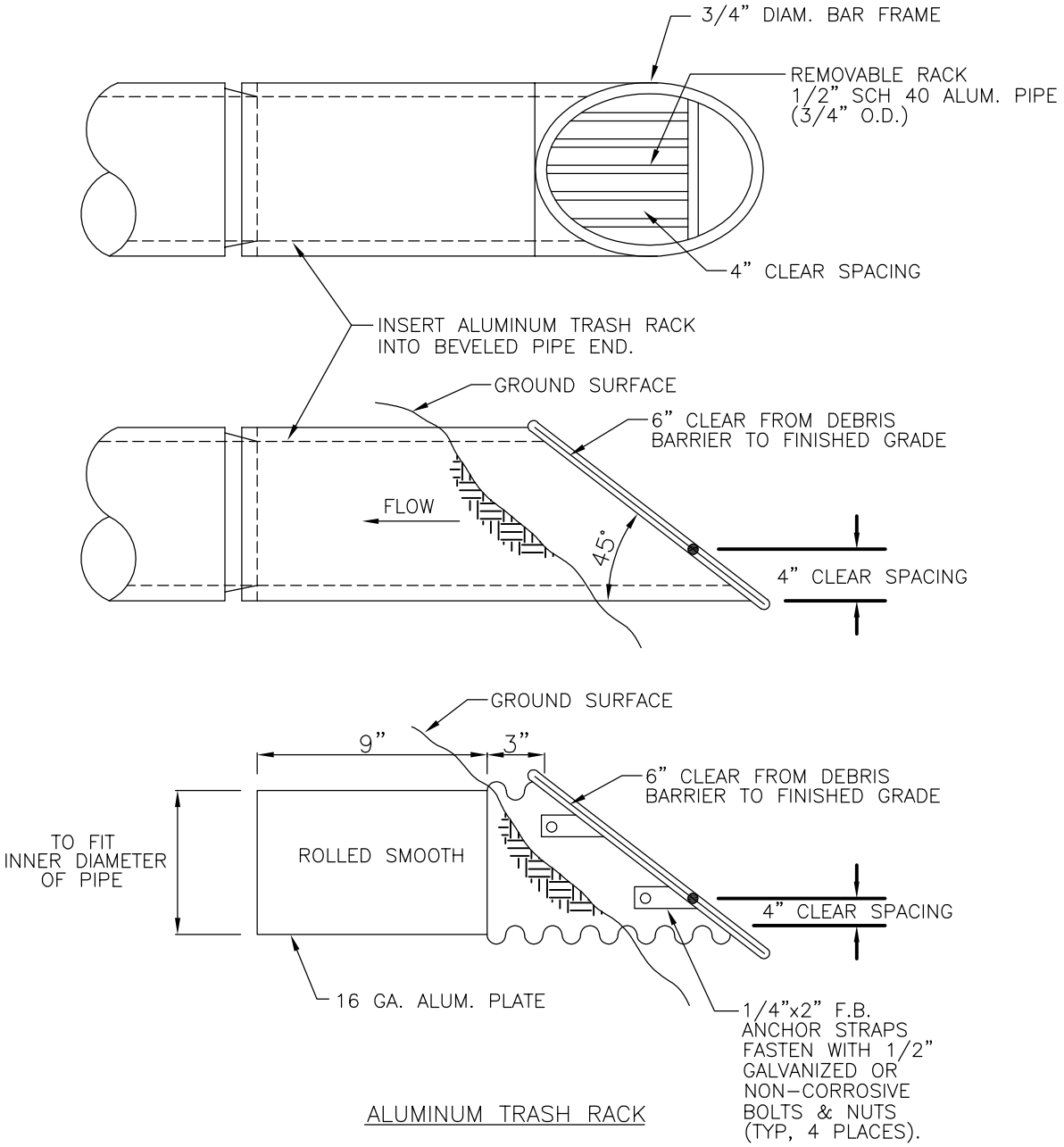

ALUMINUM TRASH RACK

NOTES:

1. ALL STEEL PARTS MUST BE GALVANIZED AND ASPHALT COATED (TREATMENT 1 OR BETTER).
2. CONTRACTOR TO VERIFY DIMENSIONS.
3. TO BE USED IN DETENTION PONDS AND AND PIPES GREATER THAN 18" DIAMETER.

City of Bellevue

STORM AND SURFACE WATER UTILITY

TITLE

TRASH RACK/DEBRIS BARRIER

JANUARY 2017

NO SCALE

NO. D-53

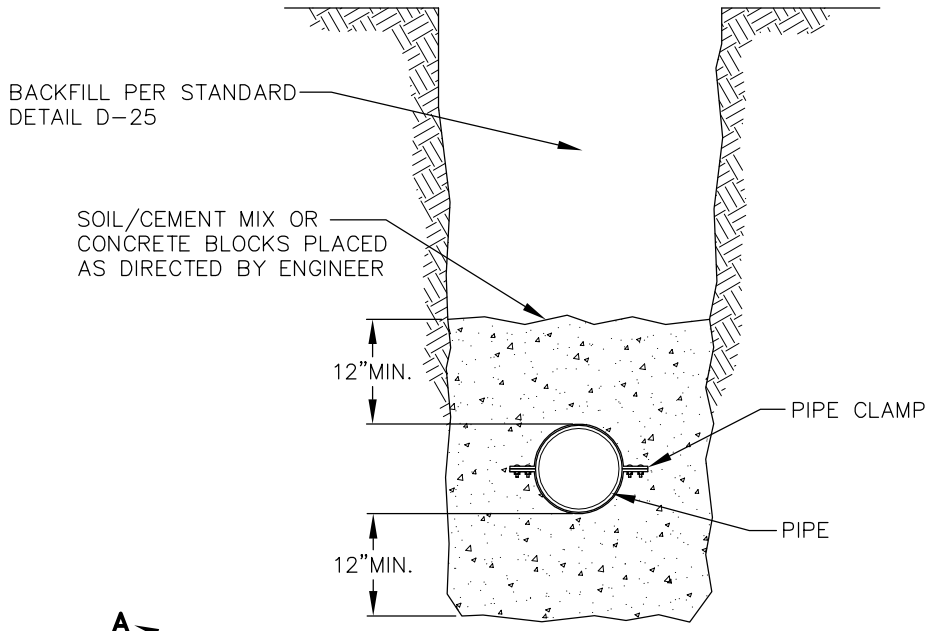

SECTION A-A

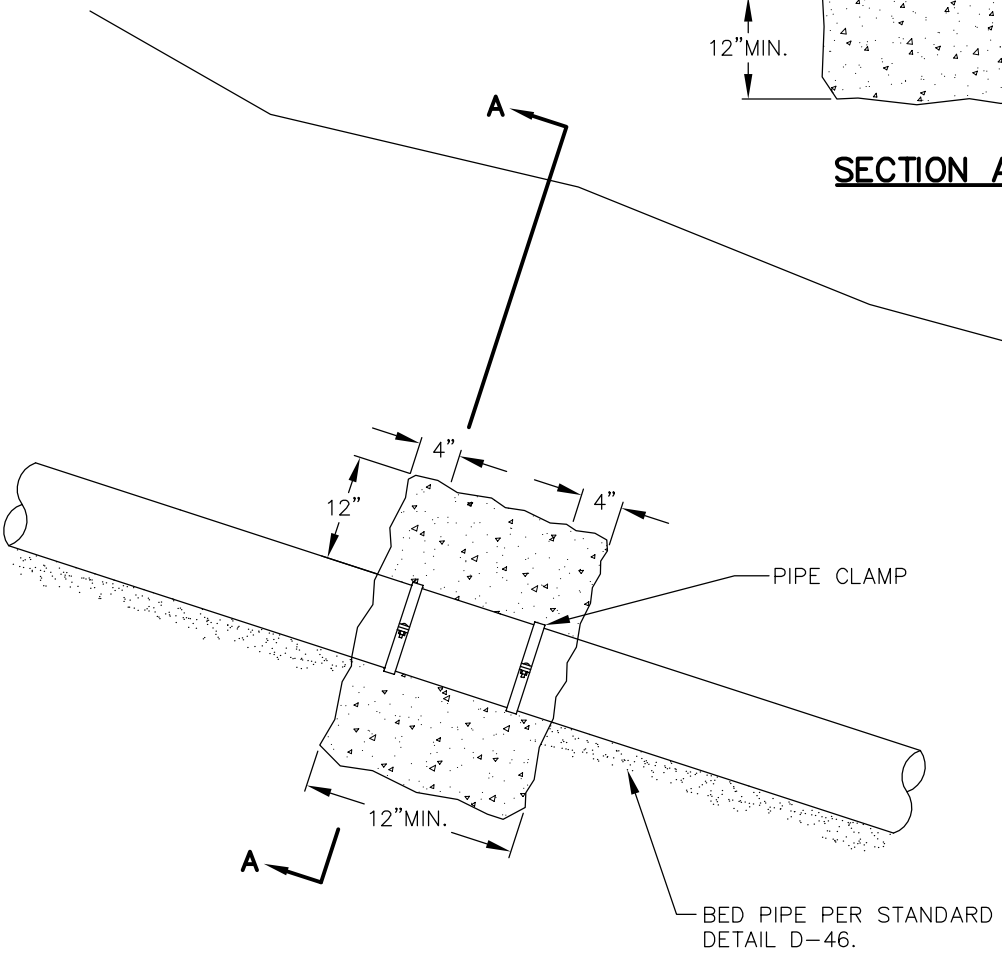

NOTES:

1. SOIL CEMENT MIX OR CONCRETE BLOCKS REQUIRED ON PIPE SLOPES OF 20% OR GREATER.
2. SOIL CEMENT BLOCKS PLACED OVER AND AROUND. TAMPED INTO PLACE BEFORE BACKFILLING. USE 10% CEMENT WITH 90% NATIVE SOIL MIX. ADD ENOUGH WATER TO FORM A DRY MIX THAT WILL HOLD ITS SHAPE WHEN MOLDED INTO A BALL.
3. PLACE TWO PIPE CLAMPS, 4" FROM BLOCK ENDS TO PROVIDE ANCHORAGE TO SOIL/CEMENT MIX.

City of Bellevue

STORM AND SURFACE WATER UTILITY

TITLE

SOIL/CEMENT PIPE ANCHORS

JANUARY 2017

NO SCALE

NO. D-54

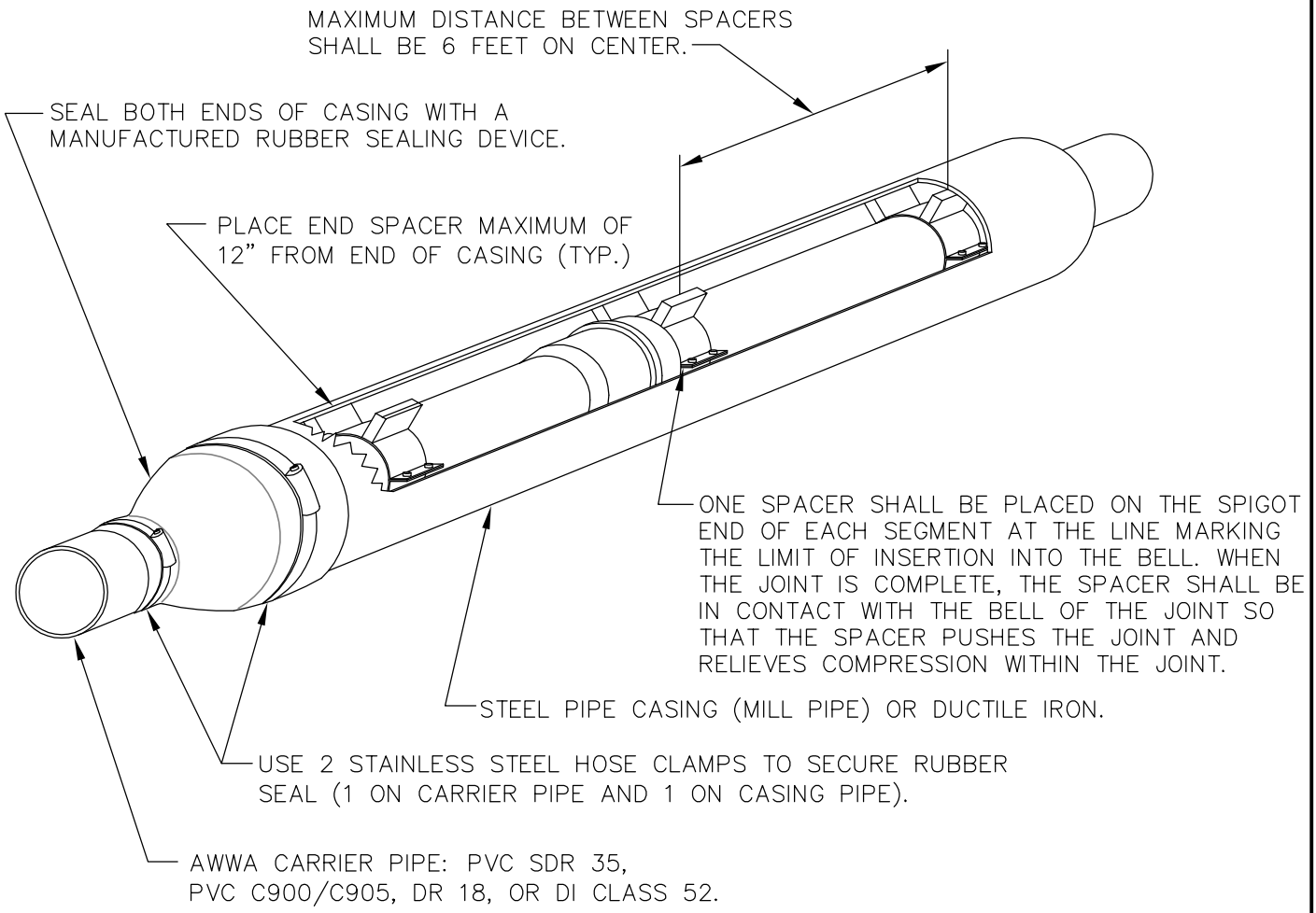

CARRIER PIPE DIAMETER	4"	6"	8"	10"	12"
CASING DIAMETER	10"	12"	14"	16"	20"
STEEL CASING THICKNESS	0.25"	0.25"	0.25"	0.25"	0.25"
SPACER BAND WIDTH	8"	8"	8"	8"	8"

NOTES:

1. CASING SPACERS SHALL BE "CENTER POSITIONING" TYPE.
2. FOR CASING SPACERS SPECS SEE S4-24.
3. MINIMUM RUNNER WIDTH SHALL BE 2 INCHES.
4. RUNNER HEIGHT SHALL BE SIZED TO PROVIDE:
   A. MINIMUM 0.75" BETWEEN CARRIER PIPE BELL AND CASING PIPE WALL AT ALL TIMES.
   B. MINIMUM 1" CLEARANCE BETWEEN RUNNERS AND TOP OF CASING WALL TO PREVENT JAMMING DURING INSTALLATION.
5. STEEL CASING DIAMETERS ARE "OUTSIDE DIAMETER" FOR 16" AND LARGER.
6. SPACER BAND WIDTH SHALL BE 12" FOR CARRIER PIPES THAT ARE 36" DIAMETER OR GREATER.
7. FOR STEEL CASING, PROVIDE SHOP-APPLIED ANTI-CORROSIVE COATING ON CASING EXTERIOR CONFORMING TO AWWA C210. MINIMUM COATING THICKNESS 16 MILS DFT (DO NOT EXCEED MANUFACTURER'S MAXIMUM THICKNESS). PRODUCT SHALL BE EQUAL TO TNEMEC HI-BUILD TNEMETAR SERIES 46H-413.

City of Bellevue

STORM AND SURFACE WATER UTILITY

TITLE

CASING INSTALLATION

JANUARY 2017 NO SCALE

NO. D-56

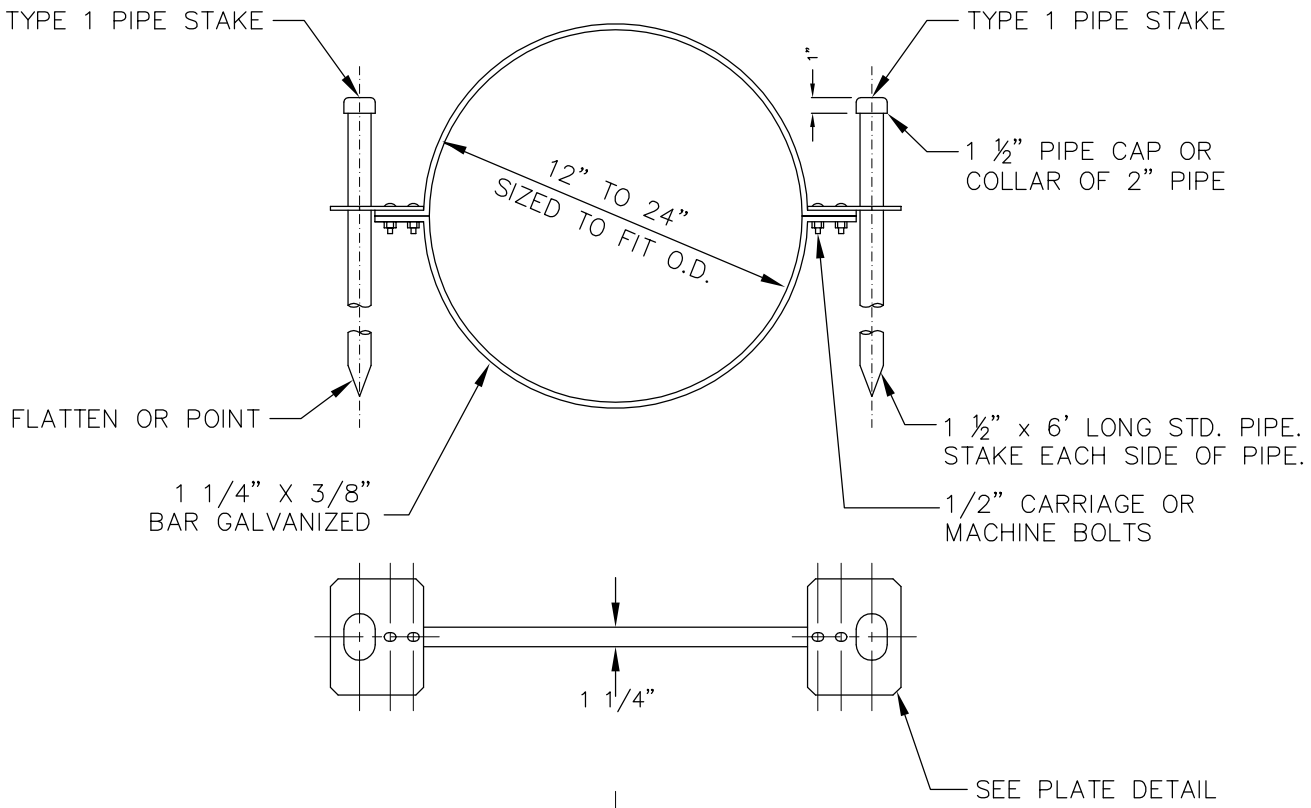

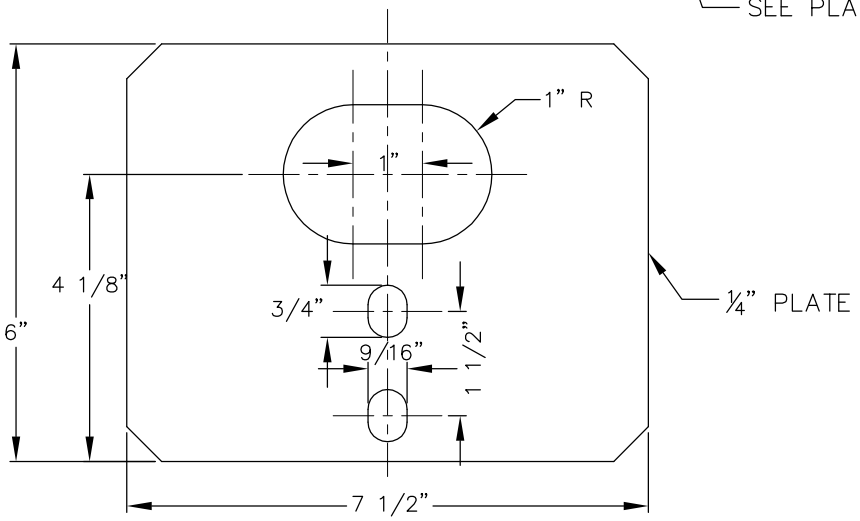

PLATE DETAIL

NOTES:

1. ALL PIPE STAKES, HARDWARE AND MATERIALS SHALL BE HOT DIPPED GALVANIZED AFTER FABRICATION.

City of Bellevue

STORM AND SURFACE WATER UTILITY

TITLE

PIPE STAKE ANCHOR ASSEMBLY

JANUARY 2017

NO SCALE

NO. D-57

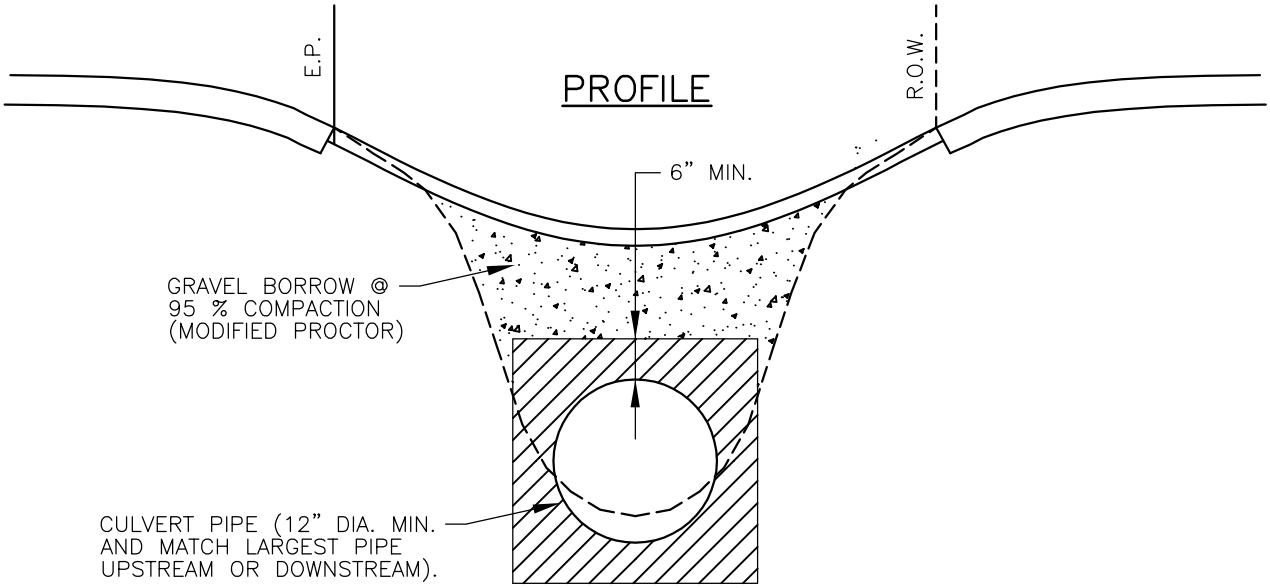

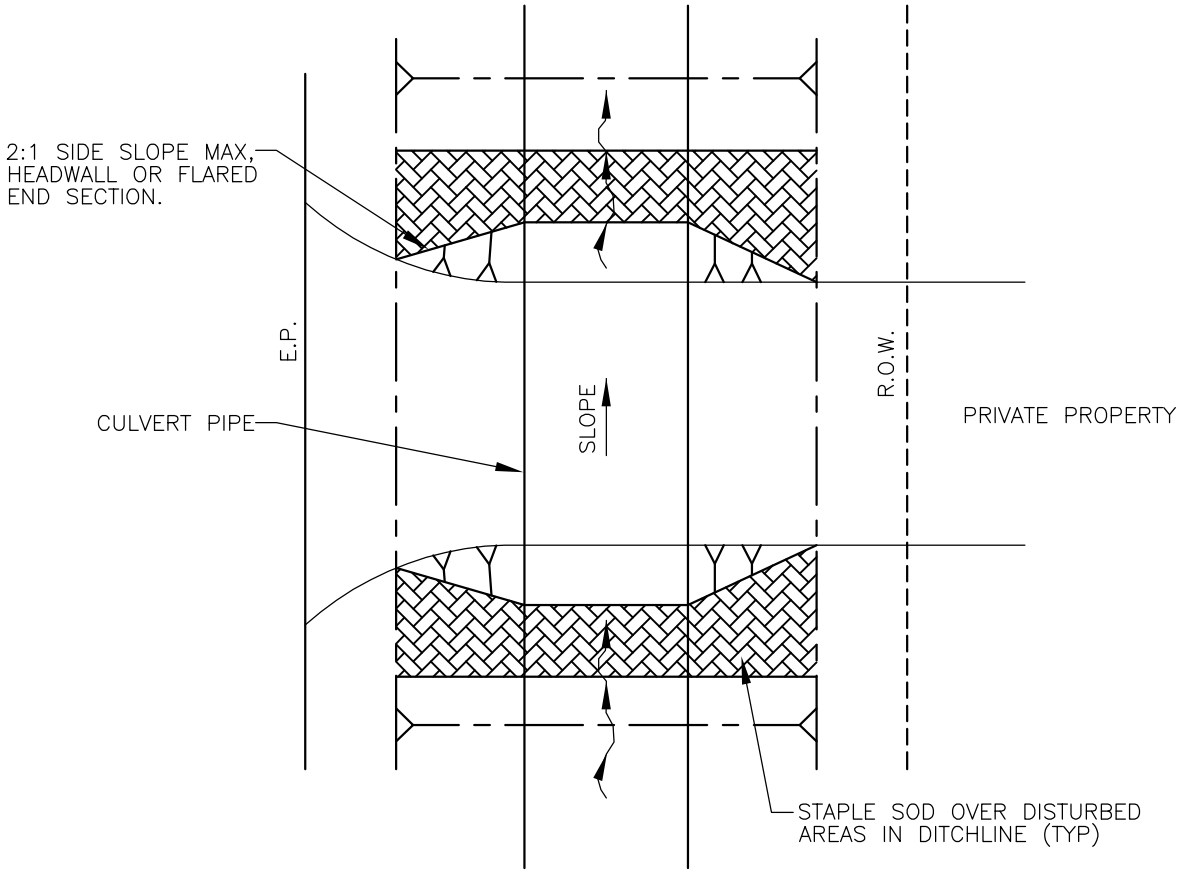

PLAN

NOTES:

1. MINIMUM BACKFILL COVER OVER PIPE IS 2FT. IF LESS THAN 2FT. COVER, PIPE SHALL BE CLASS 52 DUCTILE IRON.
2. DRIVEWAY CULVERT SHALL BE DESIGNED TO MATCH UPSTREAM AND DOWNSTREAM STORM SYSTEM, MINIMUM 12'.
3. PIPE MATERIAL SHALL BE PER THE UTILITIES ENGINEERING STANDARDS.

City of Bellevue

STORM AND SURFACE WATER UTILITY

TITLE

DRIVEWAY CULVERT

JANUARY 2017

NO SCALE

NO. D-58

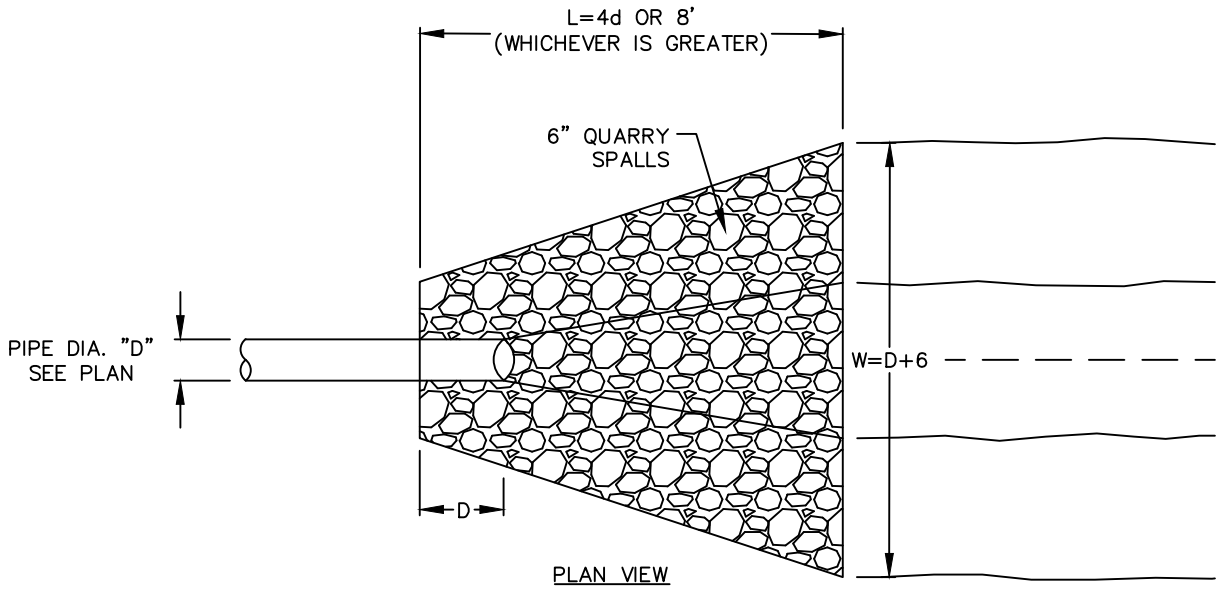

PLAN VIEW

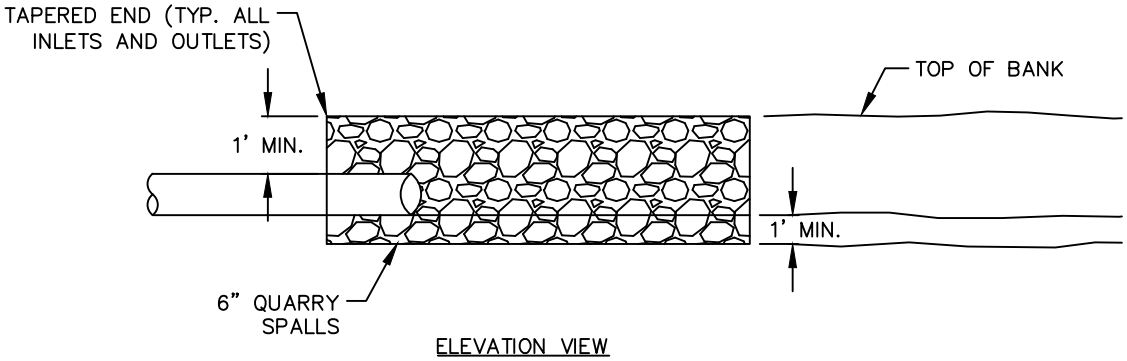

ELEVATION VIEW

NOTES:

1. DISCHARGE VELOCITY IS 2.6 FT/SEC (100 YR STORM EVENT) THEREFORE A QUARRY SPALL PAD IS REQUIRED.
2. QUARRY SPALLS SHALL BE IN ACCORDANCE WITH SECTION 9-13.6 OF THE STANDARD SPECIFICATIONS. QUARRY SPALLS SHALL BE REASONABLY WELL GRADED WITH THE FOLLOWING GRADATION:

MAX STONE SIZE	PERCENT PASSING
8"	100%
6"	40% – 60%
2"	0% – 10%

City of Bellevue

STORM AND SURFACE WATER UTILITY

TITLE

ROCK PROTECTION OUTFALL

JANUARY 2017

NO SCALE

NO. D-59

ELEVATION

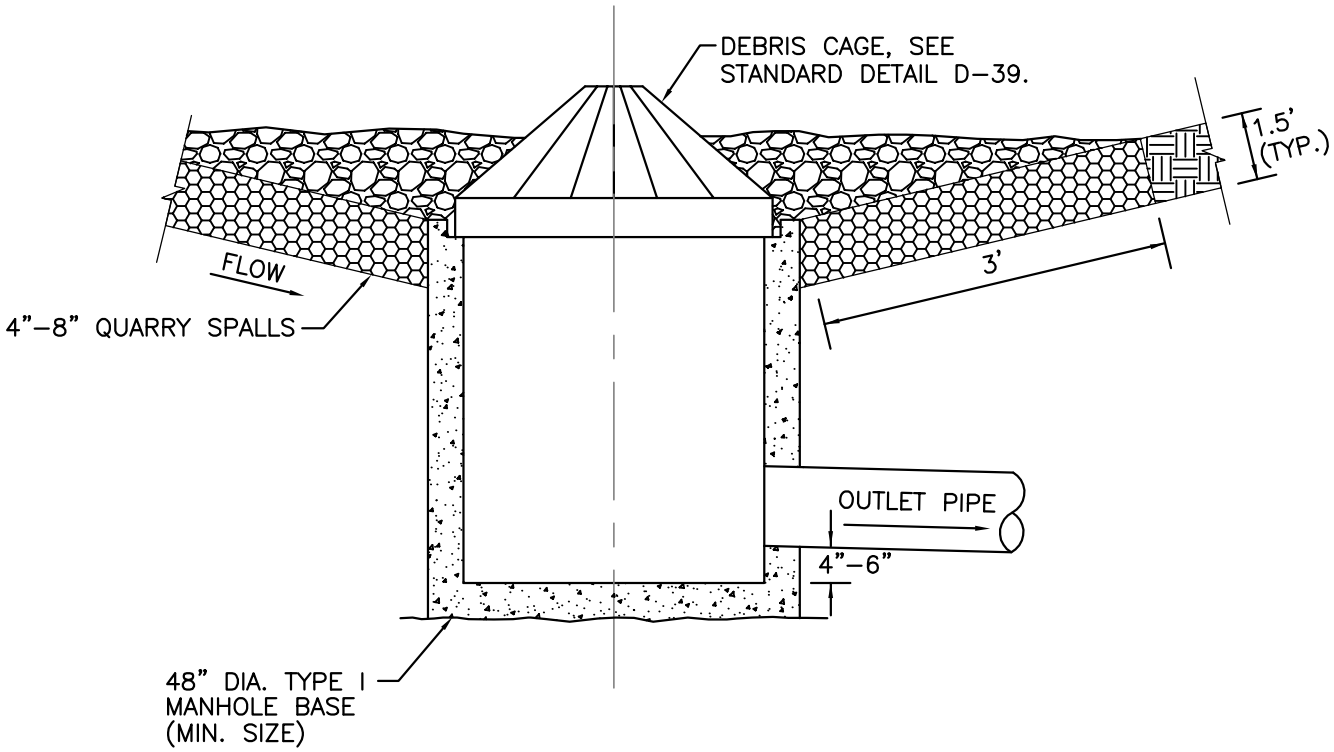

PLAN

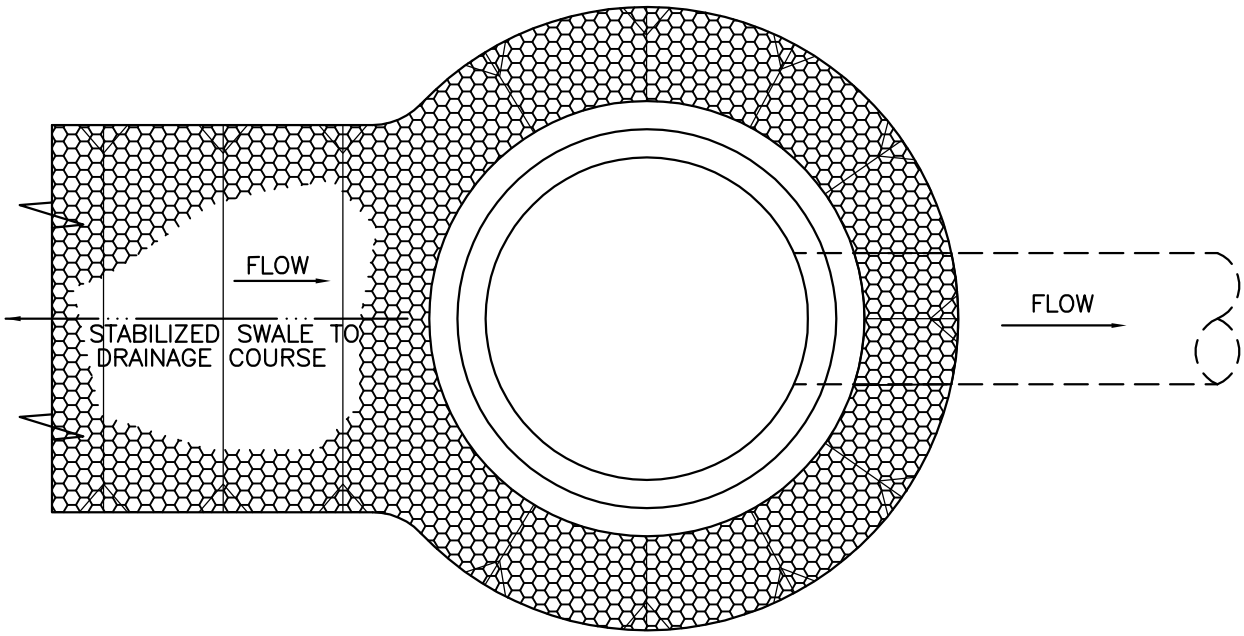

City of Bellevue

STORM AND SURFACE WATER UTILITY

TITLE

BIRD CAGE TRASH RACK STRUCTURE

NO. D-60

JANUARY 2017

NO SCALE

AMENDMENT FOR LANDSCAPED AREAS

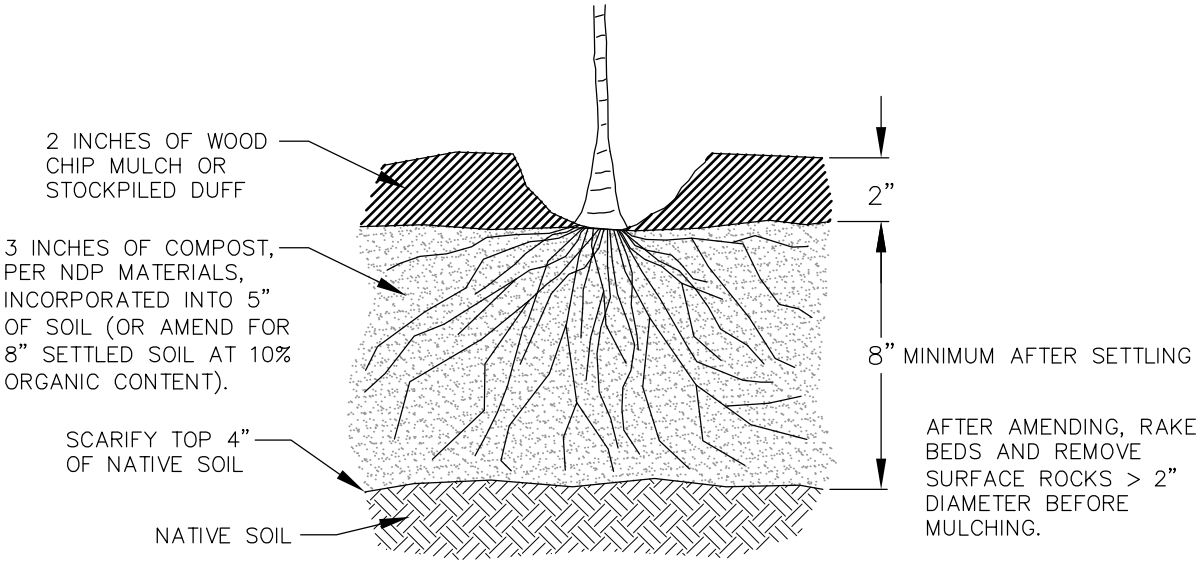

SOIL AMENDMENT FOR GRASS OR TURF AREAS

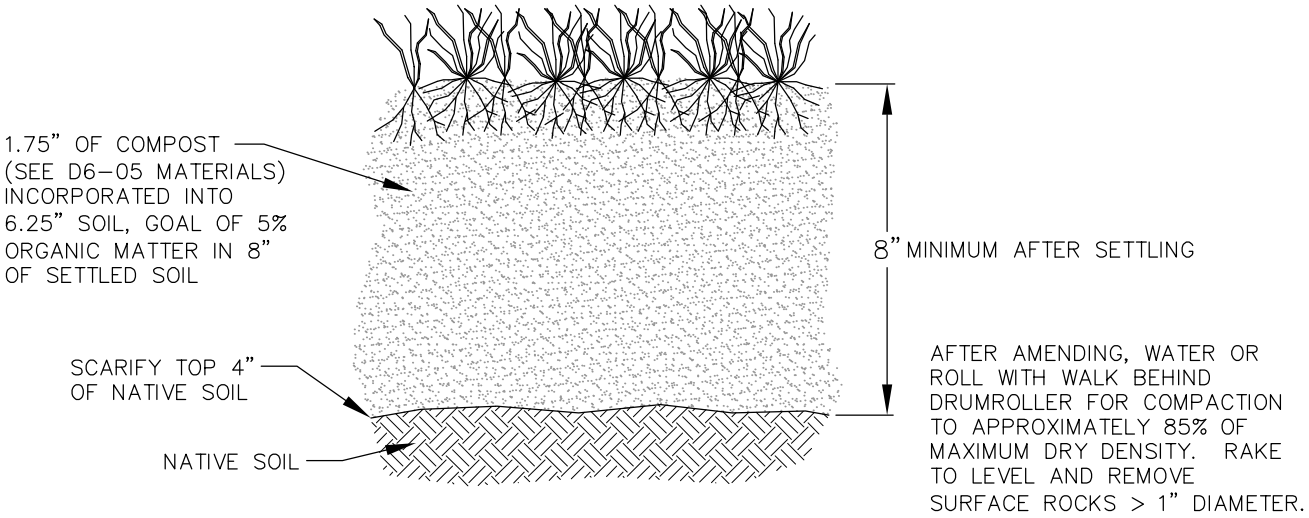

NOTES:

1. AMEND SOILS PER DOE MANUAL, VOL. V, 5.3.1, BMP T5.13, (2012 OR CURRENT) OR WWW.SOILSFORSALMON.ORG.
2. DO NOT AMEND SOILS IN AREAS WITH UNDISTURBED SOIL AND NATIVE VEGETATION.
3. OPTIONAL ALTERNATIVE: STOCKPILE NATIVE TOPSOIL ONSITE, AMEND IF NEEDED, AND REPLACE BEFORE PLANTING.
4. OPTIONAL ALTERNATIVE: IMPORT TOPSOIL MIX OF SUFFICIENT ORGANIC CONTENT AND DEPTH TO MEET REQUIREMENTS.

City of Bellevue

STORM AND SURFACE WATER UTILITY

TITLE

AMENDED SOILS

NO. NDP-1

JANUARY 2017

NO SCALE

WITHOUT UNDERDRAIN

WITH UNDERDRAIN

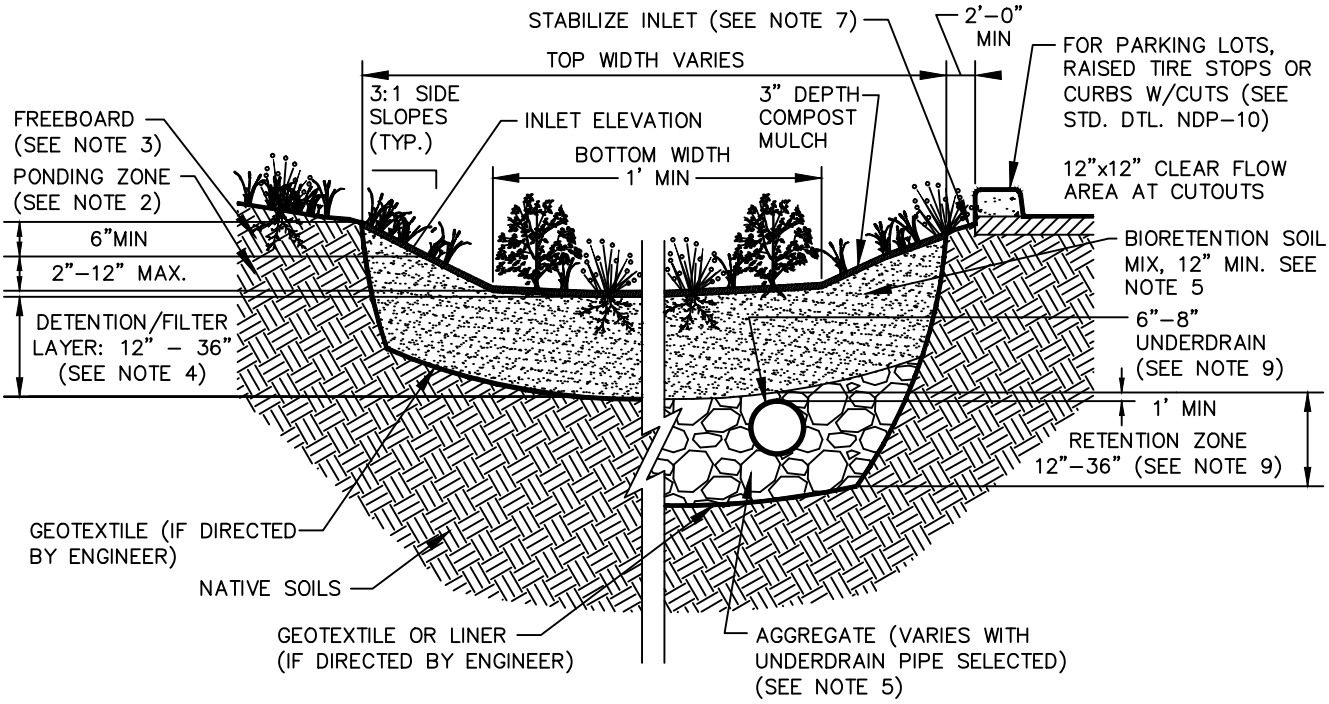

NOTES:

1. PROVIDE PROTECTION FROM ALL VEHICLE TRAFFIC, EQUIPMENT STAGING, AND FOOT TRAFFIC IN PROPOSED INFILTRATION AREAS PRIOR TO, DURING, AND AFTER CONSTRUCTION.

2. DIMENSIONS:
   A. PONDING ZONE (FROM TOP OF GROWING MEDIUM TO OVERFLOW ELEVATION); 2"-6" MINIMUM AND 12" MAXIMUM DEPENDING ON INFILTRATION RATE AND DEVELOPMENT TYPE.
   B. FLAT BOTTOM WIDTH: 1' MINIMUM.
   C. PLANTED SIDE SLOPES OF BASIN: 2.5:1 MAXIMUM ADJACENT TO SIDEWALK, 4:1 MAXIMUM FOR SHEET FLOW INLET.

3. OVERFLOW:
   A. OVERFLOW REQUIRED (PIPE OR OVERLAND) SEE STANDARD DETAILS NDP-6, 7 & 8.
   B. INLET ELEVATION MUST ALLOW FOR 6" OF FREEBOARD, MINIMUM.
   C. PROTECT OVERFLOW INLET FROM DEBRIS AND SEDIMENT WITH STRAINER OR GRATE (PIPE ONLY).
   D. DISCHARGE PER CITY OF BELLEVUE ENGINEERING STANDARDS.

4. BIORETENTION SOIL MIX:
   A. 18" MINIMUM DEPTH, FOR ON-SITE STORMWATER MANAGEMENT (MR5) OR RUNOFF TREATMENT (MR6).
   B. 12" MINIMUM DEPTH FOR FLOW CONTROL.
   C. COMPACT SUBSOILS MUST BE SCARIFIED TO 6" BELOW THE BIORETENTION SOIL LAYER.

5. SEE CHAPTER D6-05 HEREIN FOR ALL MATERIALS AND SPECIFICATIONS.

6. VEGETATION:
   A. FLOOR OF PLANTING ISLAND SHOULD BE PLANTED WITH ZONE 1 HERBACEOUS, EMERGENTS, SHRUBS, AND GROUND COVER. SEE APPENDIX 1 IN THE *LID TECHNICAL GUIDANCE MANUAL FOR PUGET SOUND* (JANUARY 2012, OR AS AMENDED).
   B. SIDE SLOPES SHOULD BE PLANTED WITH ZONE 2 OR 3 PLANTS.
   C. USE AT LEAST 3 SPECIES OF EACH PLANT COVER TYPE, NOT INCLUDING TREES.

7. INSTALL APPROXIMATELY 6" THICK LAYER WASHED DRAIN ROCK OR STREAMED COBBLE PER WSDOT 9-03.11(2) (2"-4" MIN) TO TRANSITION FROM INLET OR SPLASH PAD TO BIORETENTION SOIL MIX TO DISSIPATE ENERGY AND/OR DISPERSE FLOW.

8. INSTALL OBSERVATION PORT PER STANDARD DETAIL NDP-9, IF FLOW CONTROL (MR7) AND OR RUNOFF TREATMENT (MR6) IS REQUIRED.

9. RETENTION ZONE OPTIONAL - REQUIRED WITH UNDERDRAIN AND IF NATIVE SOIL INFILTRATION RATE IS LESS THAN 0.3"/HOUR. SEE STANDARD DETAIL NDP-3, DETAIL A.

City of Bellevue

STORM AND SURFACE WATER UTILITY

TITLE

BIORETENTION CELL

NO. NDP-2

JANUARY 2017

NO SCALE

BIORETENTION SWALE W/ UNDERDRAIN

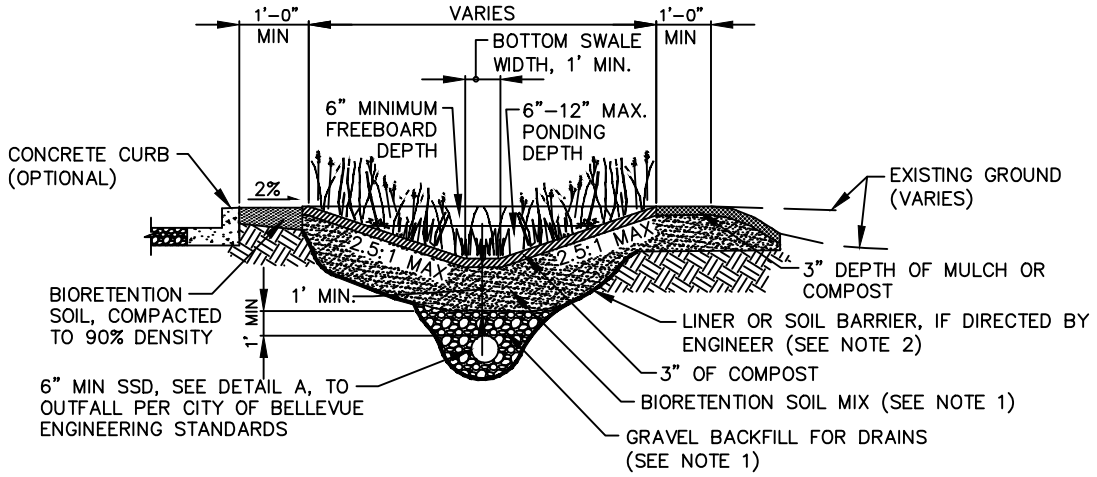

W/O UNDERDRAIN

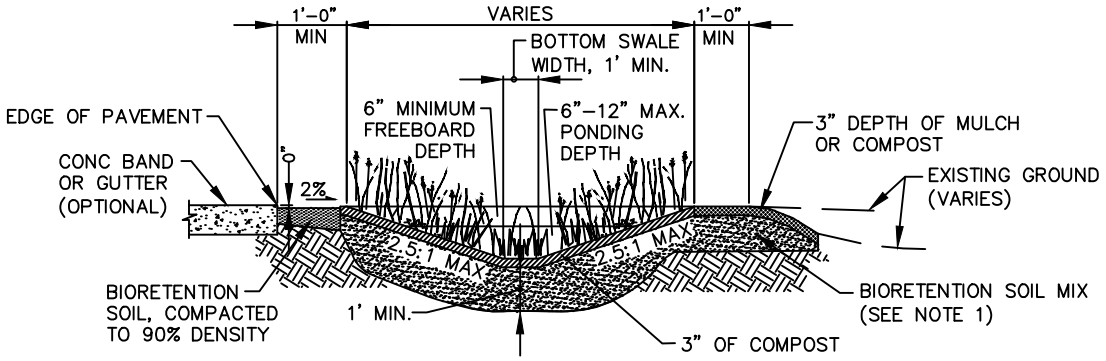

DETAIL A – (SSD) SLOTTED STORM DRAIN

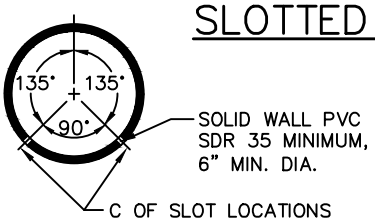

NOTES:

1. SEE CHAPTER D6–05 FOR MATERIALS.
2. LINER MAY BE ADDED IN FIELD AS DIRECTED BY ENGINEER PER VOLUME V CHAPTER 4.4 OF THE DOE MANUAL
3. BOTTOM SLOPE LESS THAN 8%. INSTALL CHECK DAMS OR WEIRS FOR SLOPES GREATER THAN 2%.
4. SLOT LOCATIONS ARE TO BE 0.04"–0.069" WIDE, (IN 2 ROWS ON 45 DEGREE CENTERS) AND COVER 1/2 THE CIRCUMFERENCE OF THE PIPE. BY 1.0" LONG AND SPACED 0.25" APART.
5. UNDERDRAIN SLOTS ORIENTED ON BOTTOM OF PIPE.

JANUARY 2017 NO SCALE

City of Bellevue

STORM AND SURFACE WATER UTILITY

TITLE

BIORETENTION SWALE

NO. NDP–3

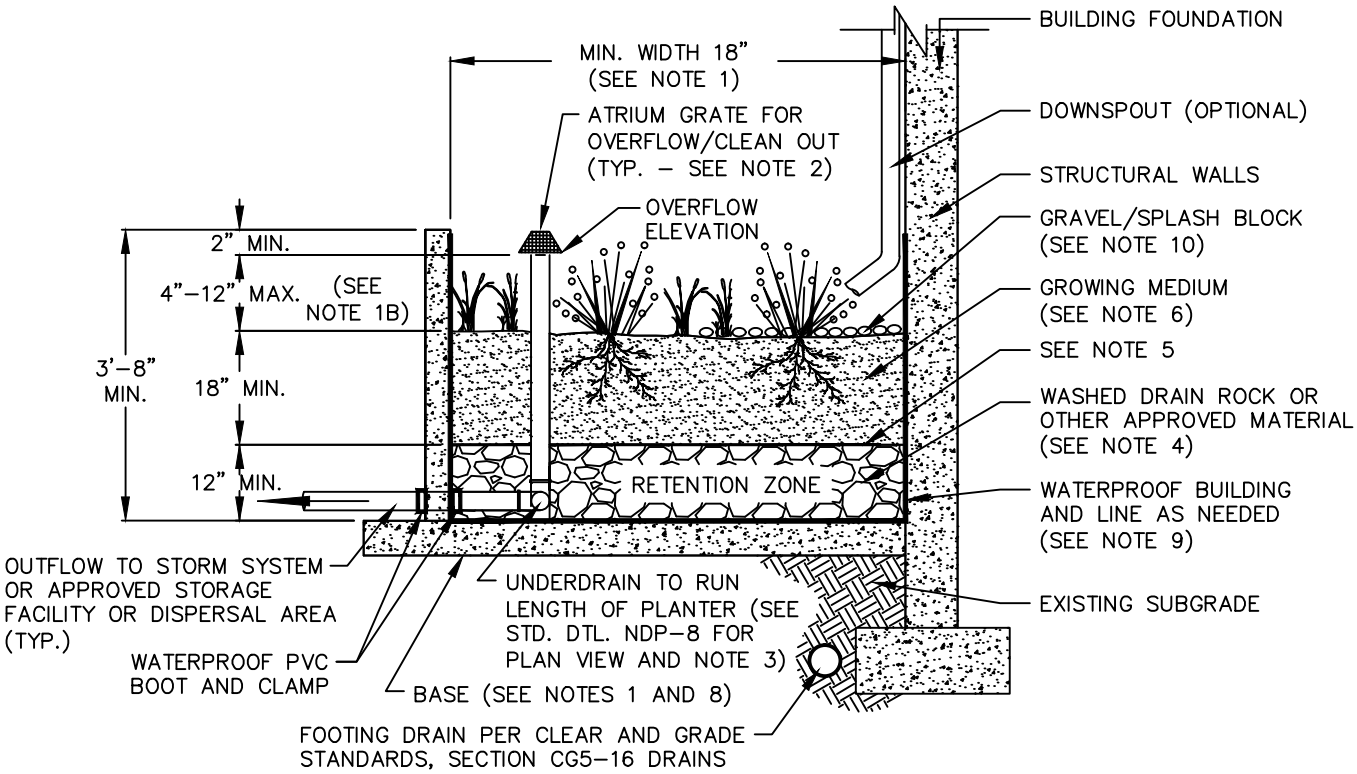

NOTES:

1. DIMENSIONS:
   A. WIDTH OF PLANTER 18" MINIMUM.
   B. PONDING DEPTH (FROM TOP OF GROWING MEDIUM TO OVERFLOW ELEVATION): 12" MAXIMUM.
   C. SLOPE OF PLANTER: 0.5% OR LESS.

2. OVERFLOW:
   A. OVERFLOW REQUIRED PER STANDARD DETAIL NDP–8.
   B. INLET ELEVATION MUST ALLOW FOR 2" MIN. OF FREEBOARD.
   C. PROTECT FROM DEBRIS AND SEDIMENT WITH STRAINER OR GRATE.

3. PIPING: SHALL BE CAST IRON, PVC SDR 35 MINIMUM, OR PVC SCHEDULE 40. 3" PIPE REQUIRED FOR UP TO 1,500 SQ FT OF CONTRIBUTING AREA, OTHERWISE 4" MIN. PIPING MUST HAVE 1% GRADE AND FOLLOW THE UNIFORM PLUMBING CODE IF WITHIN 3' OF A STRUCTURE.

4. DRAIN ROCK:
   A. SIZE PER CHAPTER D6–05.
   B. DEPTH 12"–48".

5. SEPARATION BETWEEN DRAIN ROCK AND GROWING MEDIUM: USE GRAVEL LENS (¾ – ¼ INCH WASHED, CRUSHED ROCK 2 TO 3 INCHES DEEP).

6. GROWING MEDIUM: BIORETENTION SOIL MIX PER CHAPTER D6–05.

7. VEGETATION:
   A. PLANT WITH ZONE 1 OR 2 HERBACEOUS, EMERGENTS, SHRUBS, AND/OR GROUND COVER. SEE APPENDIX 1 IN THE *LID TECHNICAL GUIDANCE MANUAL FOR PUGETSOUND* (2012 OR CURRENT) FOR A PLANT LIST.
   B. PLANTING SHALL CONSIST OF NATIVE SPECIES ABLE TO TOLERATE VARIABLE SOIL MOISTURE CONDITIONS, PONDING WATER FLUCTUATIONS AND VARIABLE SOIL MOISTURE CONTENT.

8. PLANTER WALLS:
   A. MATERIAL SHALL BE STONE, BRICK, CONCRETE, WOOD, OR OTHER DURABLE (NO CHEMICALLY TREATED WOOD).
   B. CONCRETE, BRICK, OR STONE WALLS SHALL BE INCLUDED ON FOUNDATION PLANS.

9. WATERPROOF LINER: SHALL BE 30 MIL PVC OR EQUIVALENT.

10. INSTALL WASHED PEA GRAVEL OR 1"–4" STREAMBED COBBLES PER STANDARD SPECIFICATIONS 9–03.11(2) TO TRANSITION FROM INLET OR SPLASH PAD TO GROWING MEDIUM.

City of Bellevue

STORM AND SURFACE WATER UTILITY

TITLE

BIORETENTION PLANTER – WITH UNDERDRAIN

NO. NDP–4

JANUARY 2017

NO SCALE

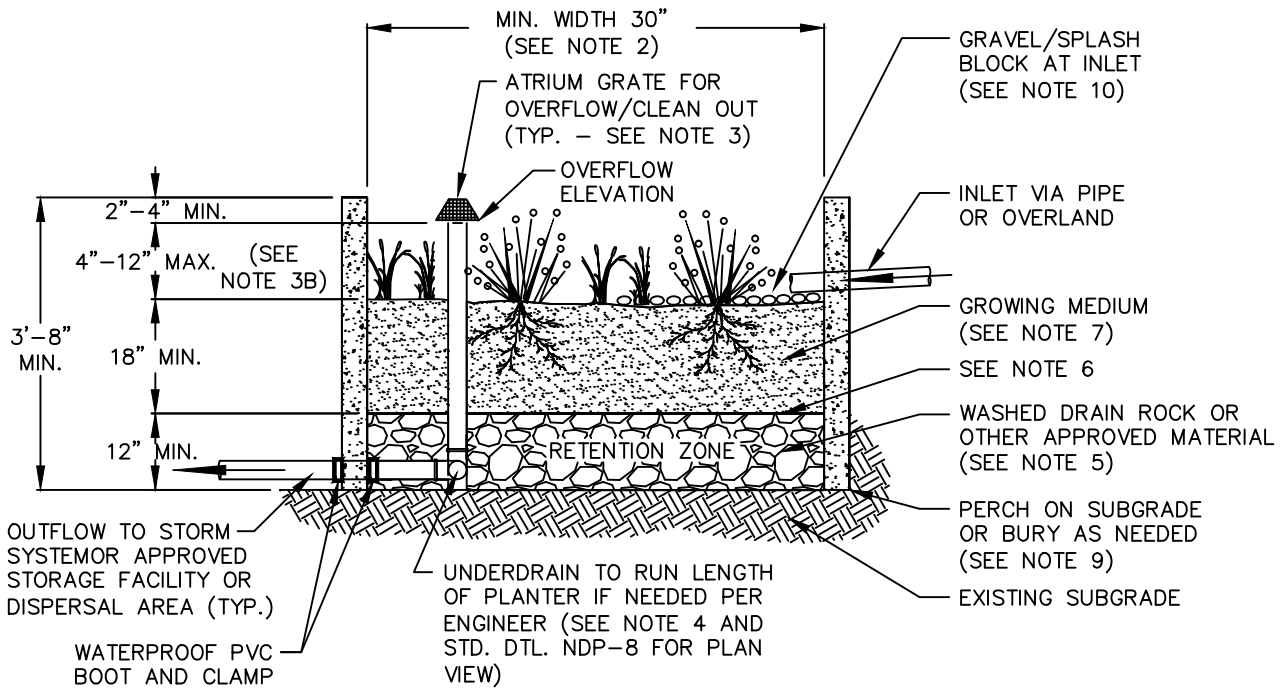

NOTES:

1. PROVIDE PROTECTION FROM ALL VEHICLE TRAFFIC, EQUIPMENT STAGING, AND FOOT TRAFFIC IN PROPOSED INFILTRATION AREAS PRIOR TO, DURING, AND AFTER CONSTRUCTION.

2. DIMENSIONS:
   A. WIDTH OF PLANTER: 30" MINIMUM.
   B. PONDING DEPTH (FROM TOP OF GROWING MEDIUM TO OVERFLOW ELEVATION): 12" MAXIMUM.
   C. SLOPE OF PLANTER: 0.5% OR LESS.

3. OVERFLOW:
   A. OVERFLOW REQUIRED (PIPE OR WEIR).
   B. INLET ELEVATION MUST ALLOW FOR 4" MIN. OF FREEBOARD.
   C. PROTECT PIPE FROM DEBRIS AND SEDIMENT WITH STRAINER OR GRATE.

4. PIPING: SHALL BE CAST IRON, PVC SDR 35 MINIMUM, OR PVC SCHEDULE 40. 3" PIPE REQUIRED FOR UP TO 1,500 SQ FT OF CONTRIBUTING AREA, OTHERWISE 4" MIN. PIPING MUST HAVE 1% GRADE AND FOLLOW THE UNIFORM PLUMBING CODE IF WITHIN 3' OF A STRUCTURE.

5. DRAIN ROCK:
   A. SIZE PER CHAPTER D6–05.
   B. DEPTH 0"–48".
   C. DRAIN ROCK NOT REQUIRED FOR INFILTRATION PLANTERS WITHOUT UNDER DRAINS.

6. SEPARATION BETWEEN DRAIN ROCK AND GROWING MEDIUM: USE GRAVEL LENS (¾ – ¼ INCH WASHED, CRUSHED ROCK 2 TO 3 INCHES DEEP).

7. GROWING MEDIUM:
   BIORETENTION SOIL MIX PER NDP MATERIALS, CHAPTER D6–05.

8. VEGETATION:
   A. PLANT WITH ZONE 1 OR 2 HERBACEOUS, EMERGENTS, SHRUBS, AND/OR GROUND COVER. SEE APPENDIX 1 IN THE *LID TECHNICAL GUIDANCE MANUAL FOR PUGET SOUND* (2012 OR CURRENT) FOR A PLANT LIST.

   B. PLANTING SHALL CONSIST OF NATIVE SPECIES ABLE TO TOLERATE VARIABLE SOIL MOISTURE CONDITIONS, PONDING WATER FLUCTUATIONS AND VARIABLE SOIL MOISTURE CONTENT.

9. PLANTER WALLS:
   MATERIAL SHALL BE STONE, BRICK, CONCRETE, WOOD, OR OTHER DURABLE (NO CHEMICALLY TREATED WOOD).

10. INSTALL WASHED PEA GRAVEL OR 1"–4" STREAMBED COBBLES PER STANDARD SPECIFICATIONS 9–03.11(2) TO TRANSITION FROM INLET OR SPLASH PAD TO GROWING MEDIUM.

11. SEE LAND USE CODE AND D5 IN THESE STANDARDS FOR SETBACKS.

12. INSTALL OBSERVATION PORT PER STANDARD DETAIL NDP–9, IF FLOW CONTROL (MR7) AND/OR RUNOFF TREATMENT (MR6) IS REQUIRED.

City of Bellevue

STORM AND SURFACE WATER UTILITY

TITLE

BIORETENTION PLANTER – INFILTRATION

NO. NDP–4A

JANUARY 2017

NO SCALE

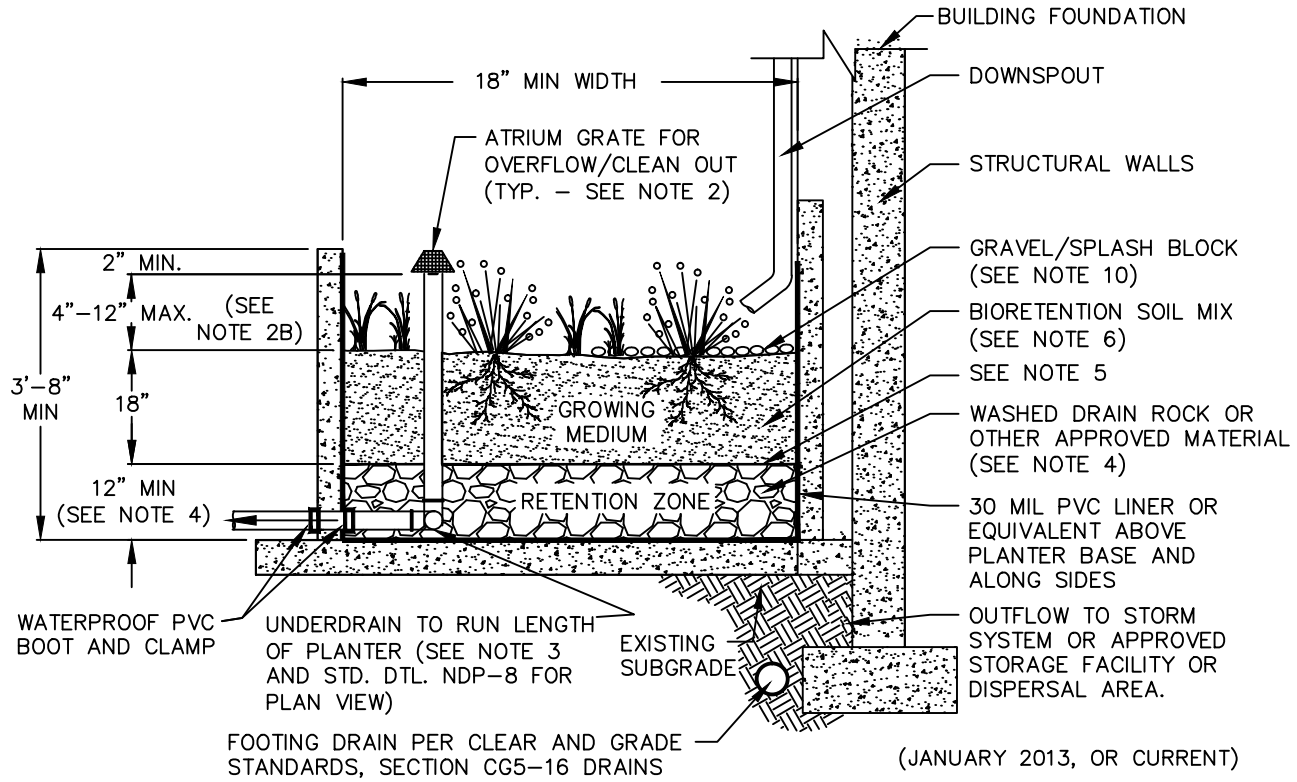

NOTES:

1. DIMENSIONS:
   A. WIDTH OF FLOW–THROUGH PLANTER: 18" MINIMUM.
   B. DEPTH OF PLANTER (FROM TOP OF GROWING MEDIUM TO OVERFLOW ELEVATION): 4"–12" MAXIMUM.
   C. SLOPE OF PLANTER: 0.5% OR LESS.

2. OVERFLOW:
   A. OVERFLOW REQUIRED.
   B. INLET ELEVATION MUST ALLOW FOR 2" MIN. OF FREEBOARD.
   C. PROTECT FROM DEBRIS AND SEDIMENT WITH STRAINER OR GRATE.

3. PIPING: SHALL BE CAST IRON, PVC SDR 35 MINIMUM, OR PVC SCHEDULE 40. 3" PIPE REQUIRED FOR UP TO 1,500 SQ FT OF CONTRIBUTING AREA, OTHERWISE 4" MIN. PIPING MUST HAVE 1% GRADE AND FOLLOW THE UNIFORM PLUMBING CODE IF WITHIN 3' OF A STRUCTURE.

4. DRAIN ROCK:
   A. SIZE PER ENGINEERS PLANS.
   B. DEPTH 12"–48".

5. SEPARATION BETWEEEN DRAIN ROCK AND GROWING MEDIUM: USE GRAVEL LENS (¾ – ¼ INCH WASHED, CRUSHED ROCK 2 TO 3 INCHES DEEP).

6. GROWING MEDIUM: BIORETENTION SOIL MIX PER CHAPTER D6–05.

7. VEGETATION:
   A. PLANT WITH ZONE 1 OR 2 HERBACEOUS, EMERGENTS, SHRUBS, AND GROUND COVER. SEE APPENDIX 3 IN THE LID TECHNICAL GUIDANCE MANUAL FOR PUGET SOUND (JANUARY 2013, OR CURRENT)
   B. PLANTING SHALL CONSIST OF NATIVE SPECIES ABLE TO TOLERATE VARIABLE SOIL MOISTURE CONDITIONS, PONDING WATER FLUCTUATIONS AND VARIABLE SOIL MOISTURE CONTENT.

8. PLANTER WALLS:
   A. MATERIAL SHALL BE STONE, BRICK, CONCRETE, WOOD, OR OTHER DURABLE (NO CHEMICALLY TREATED WOOD).
   B. CONCRETE, BRICK, OR STONE WALLS SHALL BE INCLUDED ON FOUNDATION PLANS.

9. WATERPROOF LINER: SHALL BE 30 MIL PVC OR EQUIVALENT FOR FLOW–THROUGH FACILITIES.

10. INSTALL WASHED PEA GRAVEL OR 1–4" STREAM BED COBBLE PER STANDARD SPECIFICATIONS 9–03.11(2) TO TRANSITION FROM INLET OR SPLASH PAD TO GROWING MEDIUM.

City of Bellevue

STORM AND SURFACE WATER UTILITY

TITLE

BIORETENTION PLANTER – UNDERDRAIN AND OVERFLOW CONNECTED TO STORM SYSTEM

NO. NDP–5

JANUARY 2017

NO SCALE

PLAN – BIORETENTION CELL OVERFLOW WITH CONVEYANCE FURROW

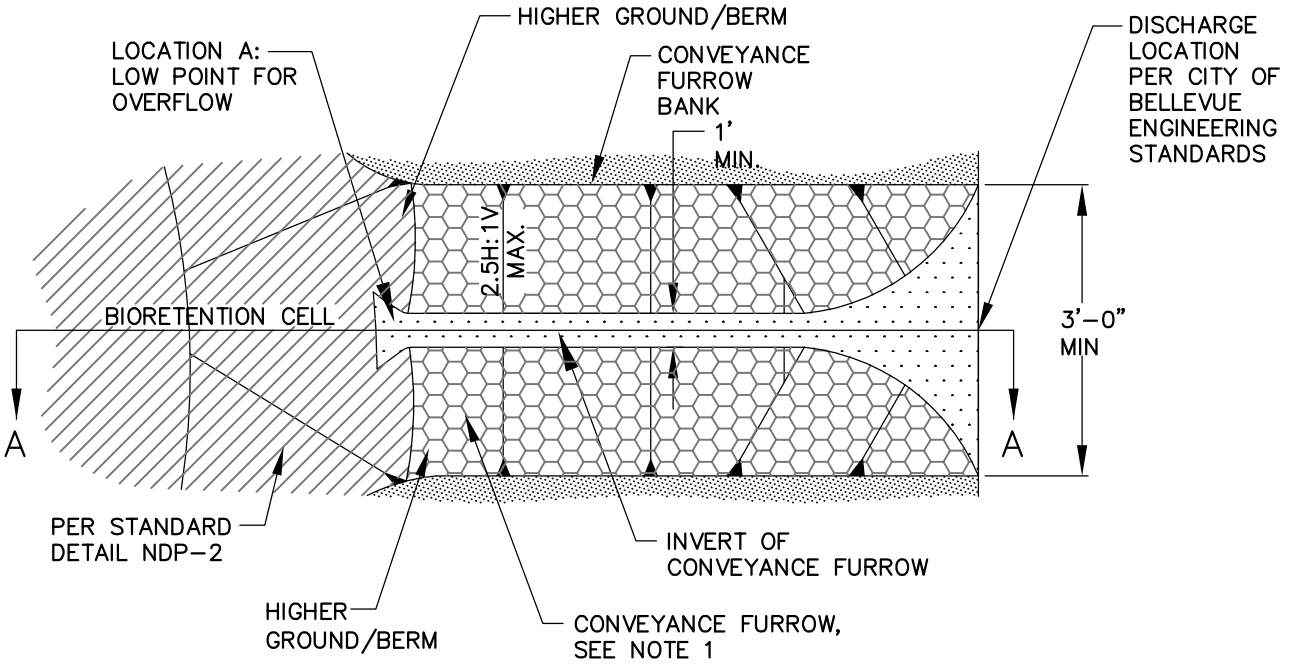

SECTION A – BIORETENTION CELL OVERFLOW WITH CONVEYANCE FURROW

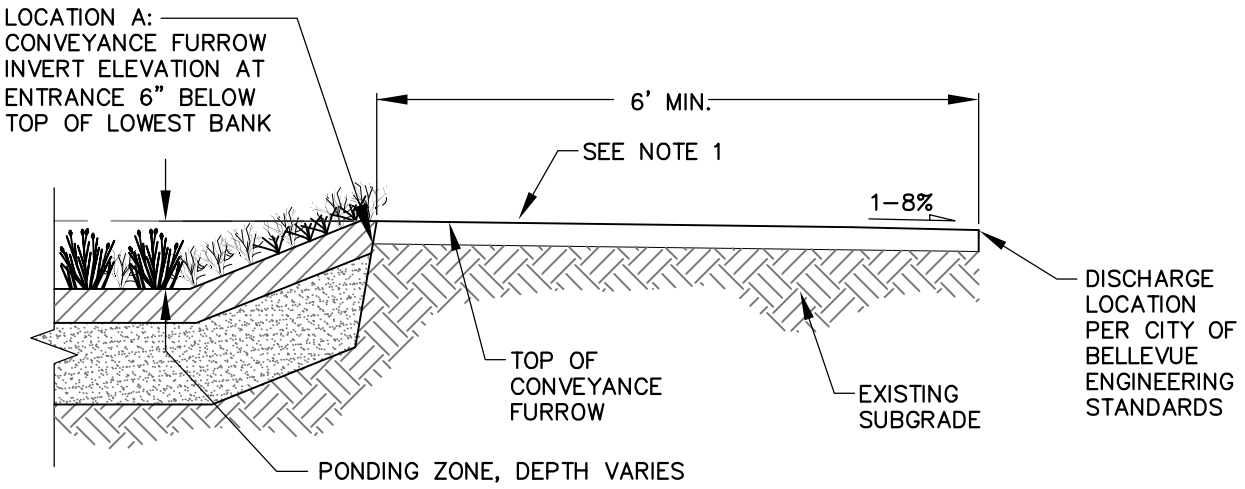

NOTE:

1. LINE CONVEYANCE FURROW WITH STREAMBED COBBLE PER STANDARD SPECIFICATIONS 9–03.11(2) (MIN 6" DEPTH) FOR DESIGN FLOW UP TO 4 F.P.S., OR MIN. 12" BIORETENTION SOIL MIX FOR DESIGN FLOW LESS THAN 4 F.P.S. AND PLANT WITH BIORETENTION GROUND COVERS OR TURF, OR PER ENGINEER'S DESIGN.

JANUARY 2017 NO SCALE

City of Bellevue

STORM AND SURFACE WATER UTILITY

TITLE

BIORETENTION OVERFLOW WITH CONVEYANCE FURROW

NO. NDP–6

PLAN – BIORETENTION CELL OVERFLOW WITH PIPE CULVERT

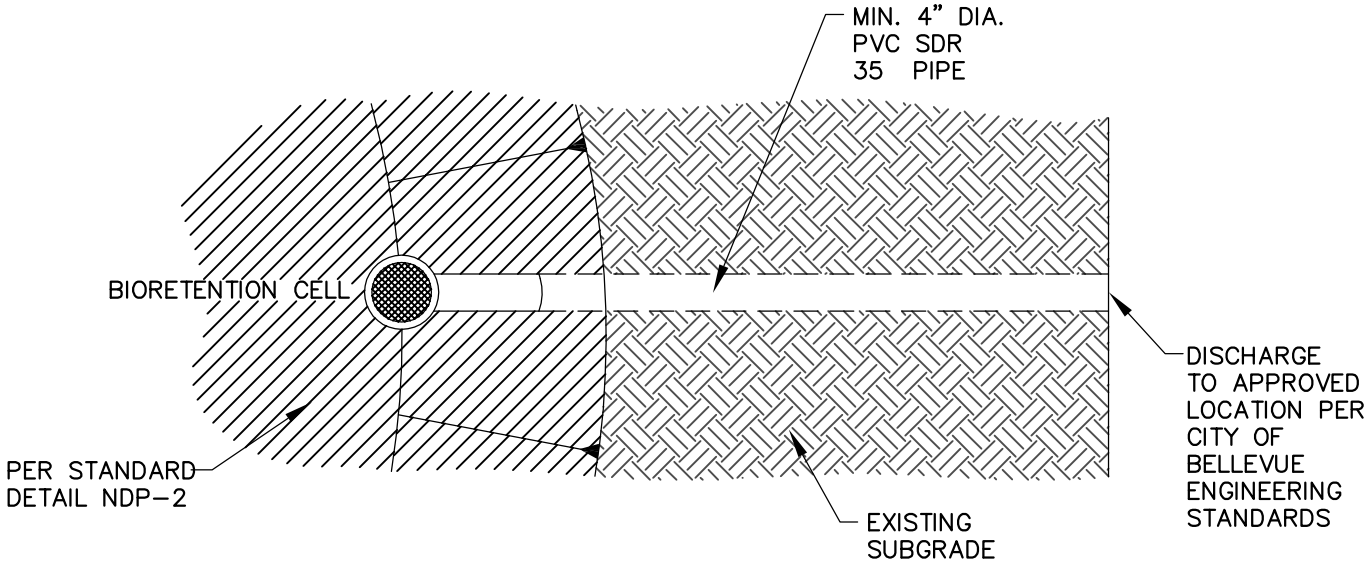

SECTION A – BIORETENTION CELL OVERFLOW WITH PIPE CULVERT

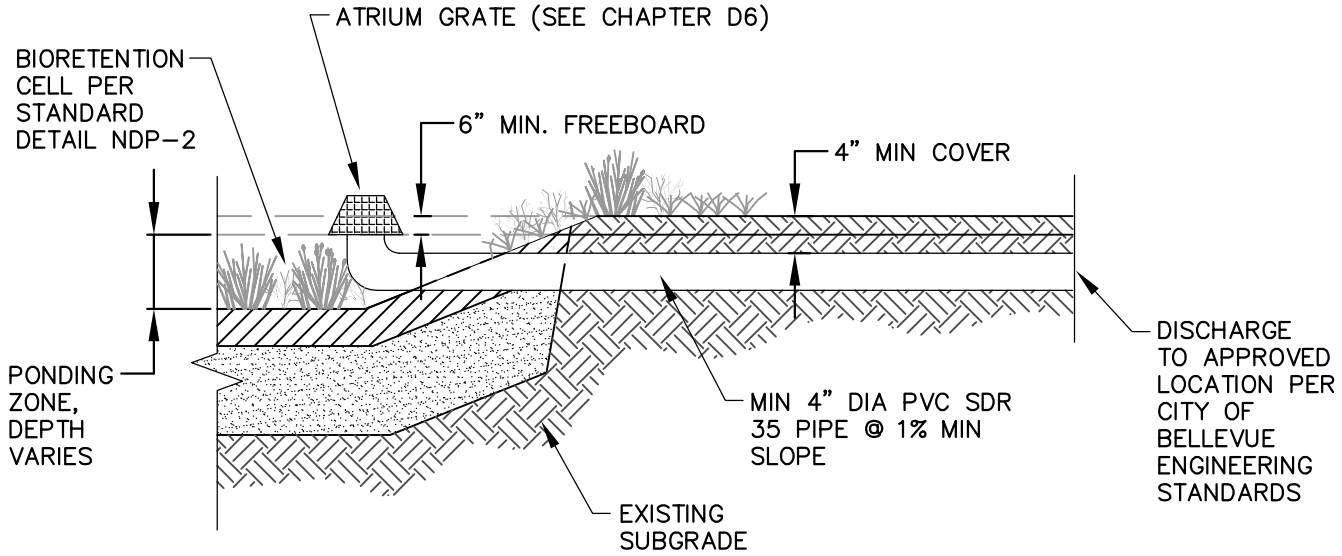

City of Bellevue

STORM AND SURFACE WATER UTILITY

TITLE

BIORETENTION OVERFLOW WITH PIPE CULVERT

NO. NDP–7

JANUARY 2017

NO SCALE

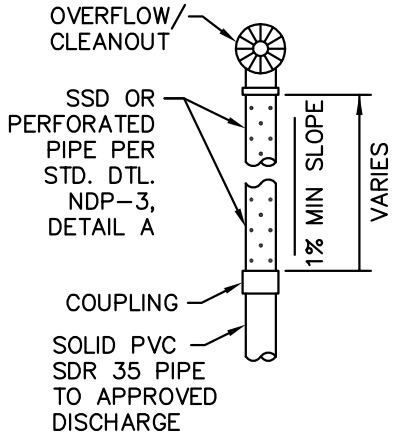

A – PLAN VIEW

PIPE W/ UNDERDRAIN
& DISCHARGE POINT

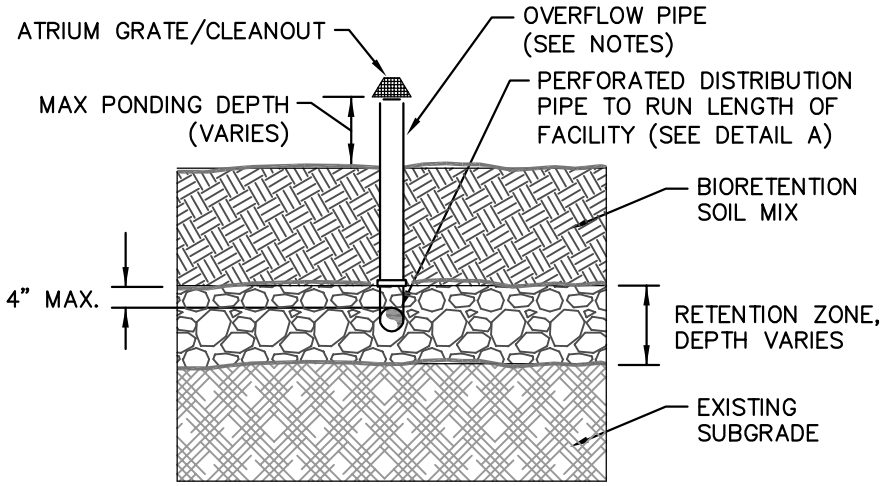

INFILTRATION

OVERFLOW DIRECTED TO DRAIN ROCK,
0.3 INCH/HR. OR GREATER
NATIVE SOIL INFILTRATION RATE.

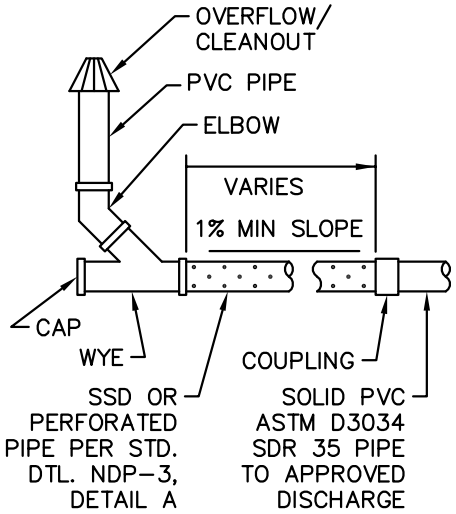

A – CROSS SECTION VIEW

PIPE W/ UNDERDRAIN
& DISCHARGE POINT

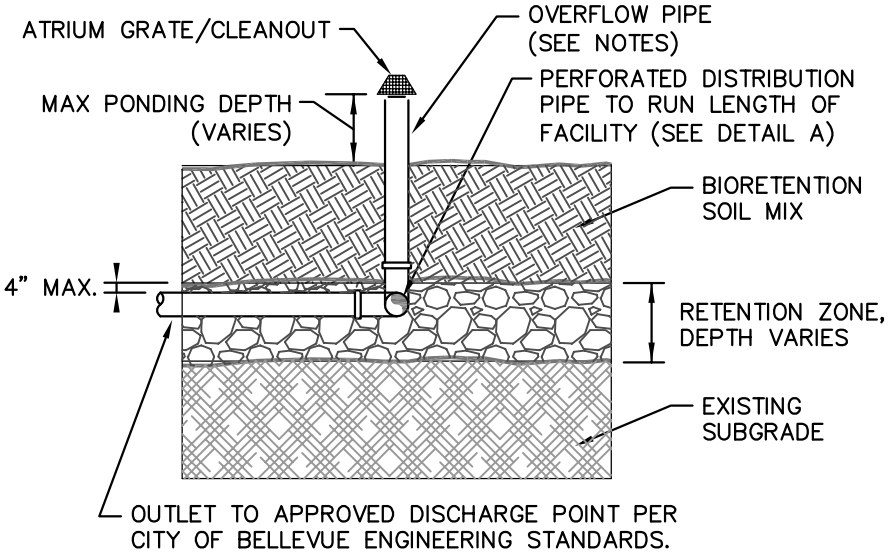

BIORETENTION WITH UNDERDRAIN

LESS THAN 0.3 INCH/HR
NATIVE SOIL INFILTRATION RATE
OR PER ENGINEERS DESIGNS.

NOTES:

1. PIPE OVERFLOW NOT REQUIRED IF FACILITY INFILTRATES THE 100-YEAR STORM.
2. OVERLAND OVERFLOW PATH REQUIRED – ADEQUATELY STABILIZE WITH STREAMBED COBBLE (STANDARD SPECIFICATIONS 9-03.11(2)) AND DIRECT TO AN APPROPRIATE DOWNSTREAM DRAINAGE AREA.
3. OVERFLOW PIPE: PVC, 3" MINIMUM. USE SCHEDULE 80 FOR 3" DIAMETER PIPE, FOR ALL OTHERS USE SDR35.

JANUARY 2017 NO SCALE

City of Bellevue

STORM AND SURFACE WATER UTILITY

TITLE

OVERFLOW CONFIGURATIONS FOR BIORETENTION

NO. NDP-8

HOW TO CONTRUCT AND INSTALL AN OBSERVATION PORT TO MEASURE WATER DEPTH

MATERIALS:

- 2–10 FEET OF 3–INCH DIAMETER PVC PIPE (SCH40 IF IN FACILITY, SCH80 IF OFFSET).
- 4 FEET OF 3–INCH DIAMETER WELL SCREEN (CANAL LAKE SCREEN) (0.01–INCH SLOTS)
- 3–INCH DIAMETER COUPLING
- TEST PLUG (EXPANDING) AND/OR LOOSE FITTING TOP CAP
- 3–INCH DIAMETER PVC END CAP
- BENTONITE (USE MEDIUM–SIZED CHIPS) OR CONCRETE
- SAND PACK (20/30 MESH)

INSTRUCTIONS:

1. AUGER THE PORT HOLE.
   BORE THE PORT HOLE IN BOTTOM OF FACILITY OR RUN PIPE FROM TOP OF FACILITY ALONG BOTTOM TO OBSERVATION PORT VERTICAL PIPE IN BERM (SEE DETAIL A) USING A FOUR–INCH DIAMETER HAND AUGER OR POST–HOLE DIGGER. THE PORT HOLE SHOULD EXTEND 6" BELOW THE BOTTOM OF THE FACILITY.
2. CONSTRUCT THE OBSERVATION PORT CASING.
   MEASURE THE DISTANCE FROM THE EXISTING GRADE TO THE BOTTOM OF THE PORT HOLE AND RECORD THIS DISTANCE PERMANENTLY IN THE STORMWATER OPERATIONS & MAINTENANCE MANUAL AND ON THE AS–BUILT DRAWING. CUT THE WELL SCREEN AND RISER TO FIT. WHEN ASSEMBLED, THE PVC COUPLING, WHICH JOINS THE WELL SCREEN AND THE RISER, SHOULD BE 14 INCHES BELOW THE GROUND SURFACE. THE SOLID PVC RISER SHOULD EXTEND ABOVE THE OVERFLOW ELEVATION. DRILL ONE–QUARTER INCH HOLES IN THE BOTTOM AND SIDES OF THE WELL POINT TO ALLOW WATER TO FREELY FLOW. ASSEMBLE THE COMPONENTS.
3. PACK THE CASING WITH SAND.
   PLACE SAND IN THE BOTTOM 2 TO 6 INCHES OF THE BORE HOLE. CENTER THE CASING IN THE PORT HOLE. POUR SAND AROUND THE OUTSIDE OF THE CASING. TAMP THE SAND AS YOU POUR. ADD SAND TO A DEPTH OF FOUR INCHES ABOVE THE COUPLING.
4. SEAL WITH BENTONITE OR CONCRETE.
   TO PREVENT SURFACE WATER FROM FLOWING DOWN THE OUTSIDE OF THE CASING, FILL THE REMAINER OF THE HOLE WITH A LAYER OF BENTONITE OR CONCRETE ON TOP OF THE SAND. IF CONCRETE IS USED, IT SHOULD RISE ONE–HALF INCH ABOVE THE GROUND AND SHOULD SLOPE AWAY FROM THE CASING.
5. LABEL AND MARK THE CASING.
   USE A PERMANENT MARKER TO WRITE AN IDENTIFICATION NUMBER ON THE SIDE OF THE CASING. MARK A REFERENCE POINT ON THE TOP EDGE OF RISER FROM WHICH ALL MEASUREMENTS WILL BE TAKEN.
6. READ WATER TABLE DEPTH:
   A. MEASURE DISTANCE FROM TOP EDGE OF RISER TO SOIL SURFACE.
   B. MEASURE DISTANCE FROM TOP EDGE OF RISER TO WATER SURFACE INSIDE OF PIPE.
   C. SUBTRACT A FROM B FOR DEPTH TO WATER TABLE.

MODIFICATION FOR CREST GAGE (OPTIONAL)

MATERIALS:

- 4–6 FEET OF 1–INCH DIAMETER PVC
- CORK DUST

INSTRUCTIONS:

1. CUT THE CREST GAGE TO LENGTH.
   SIZE THE CREST GAGE TO FIT INSIDE THE OBSERVATION PORT CASING. THE CREST GAGE SHOULD SIT IN THE BOTTOM OF THE CASING AND BE FLUSH WITH THE TOP OF THE CASING.
2. ADD CORK DUST.
   REMOVE THE CREST GAGE FROM THE OBSERVATION PORT CASING. ADD ABOUT ONE–HALF TEASPOON OF CORK DUST INTO THE OBSERVATION PORT CASING. IF YOU MAKE YOUR OWN CORK DUST, GRIND IT TO THE TEXTURE OF COARSELY GROUND COFFEE. PLACE THE CREST GAGE IN THE OBSERVATION PORT. REPLACE THE OBSERVATION PORT TOP PLUG OR CAP.
3. READING THE MAXIMUM WATER LEVEL.
   A CREST GAGE RECORDS THE MAXIMUM WATER LEVEL BETWEEN READINGS. AS THE WATER TABLE RISES, SO WILL THE CORK DUST. AS THE WATER LEVEL DROPS, A RING OF CORK DUST REMAINS ON THE CREST GAGE. REMOVE THE CREST GAGE FROM THE OBSERVATION PORT. MEASURE FROM THE TOP OF THE CREST GAGE TO THE CORK DUST RING. CONVERT THE MEASUREMENT TO DEPTH OF WATER TABLE BELOW GROUND SURFACE BY SUBTRACTING THE LENGTH OF THE RISER ABOVE THE GROUND. THIS MEASUREMENT IS THE DEPTH OF THE MAXIMUM WATER LEVEL SINCE THE LAST READING.
4. RINSE DOWN CORK DUST.
   AFTER YOU RECORD THE MEASUREMENT, REMOVE THE CORK DUST FROM THE CREST GAGE. RINSE THE INSIDE WALLS OF THE OBSERVATION PORT CASING WITH A SQUIRT BOTTLE. PLACE THE CREST GAGE IN THE OBSERVATION PORT. REPLACE THE OBSERVATION PORT TOP CAP.
5. INSTALL WITHIN THE 3" PVC OBSERVATION PORT.

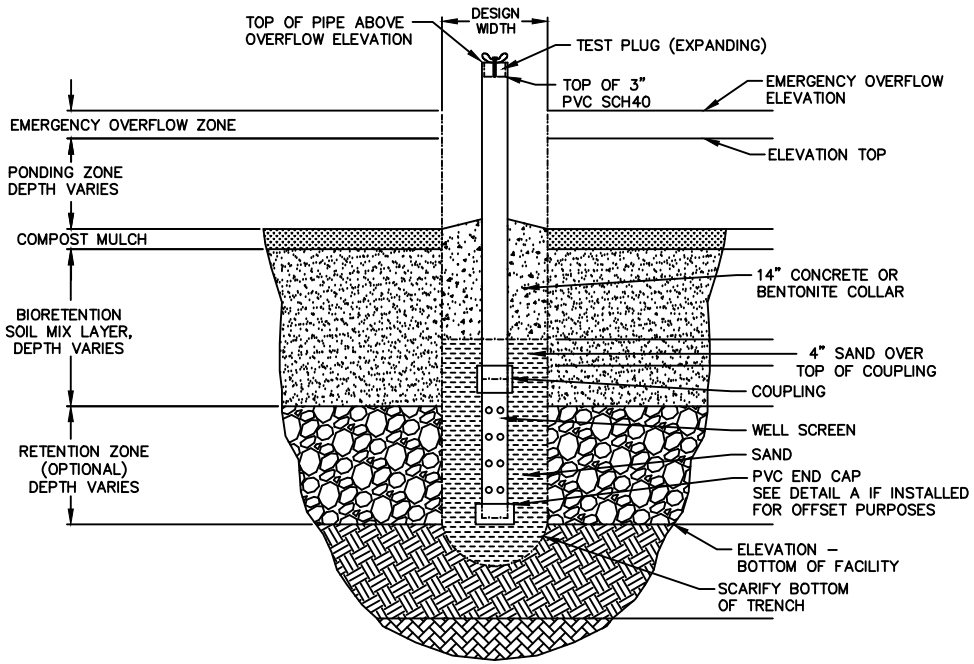

DETAIL A
OFFSET OBSERVATION PORT

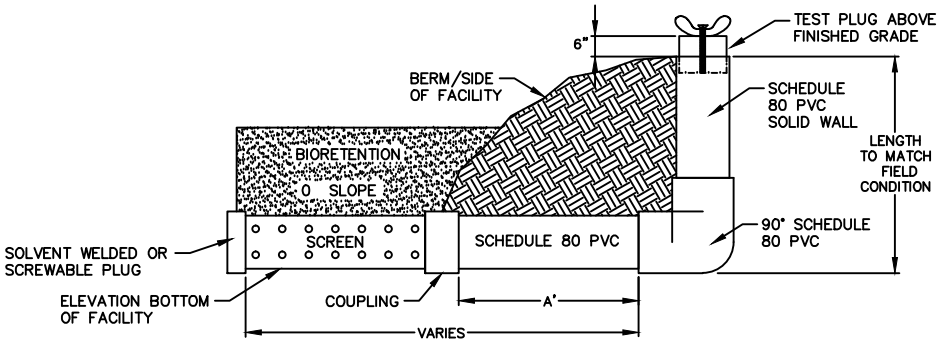

DETAIL A NOTES:

1. EXTEND OBSERVATION PORT ACROSS BOTTOM OF FACILITY

City of Bellevue — STORM AND SURFACE WATER UTILITY

TITLE: OBSERVATION PORT FOR BIORETENTION

NO. NDP–9

JANUARY 2017

NO SCALE

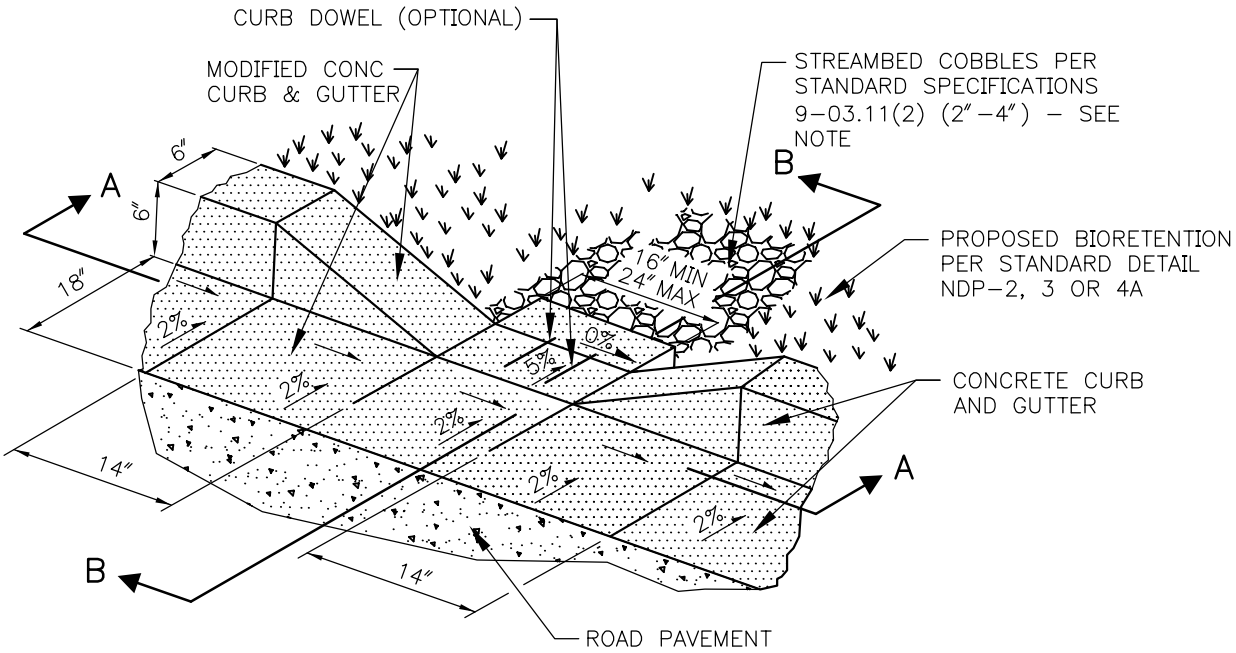

SECTION A-A

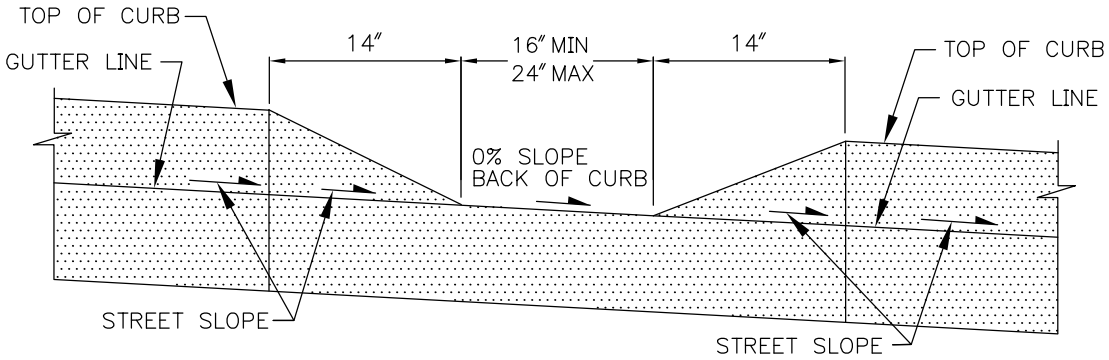

SECTION B-B

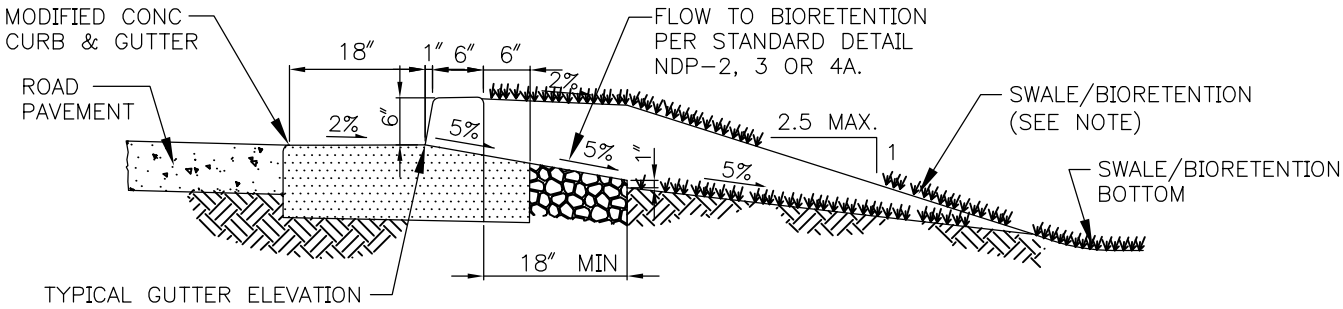

NOTE:

MODIFY INLET TO BIORETENTION PLANTER AS NEEDED TO PREVENT EROSION. THE STREAMBED COBBLES ARE OPTIONAL UNLESS REQUIRED BY THE UTILITY REVIEWER OR THE ENGINEER.

City of Bellevue

STORM AND SURFACE WATER UTILITY

TITLE

DRAIN CURB CUT OPENING FOR BIORETENTION

JANUARY 2017

NO SCALE

NO. NDP-10

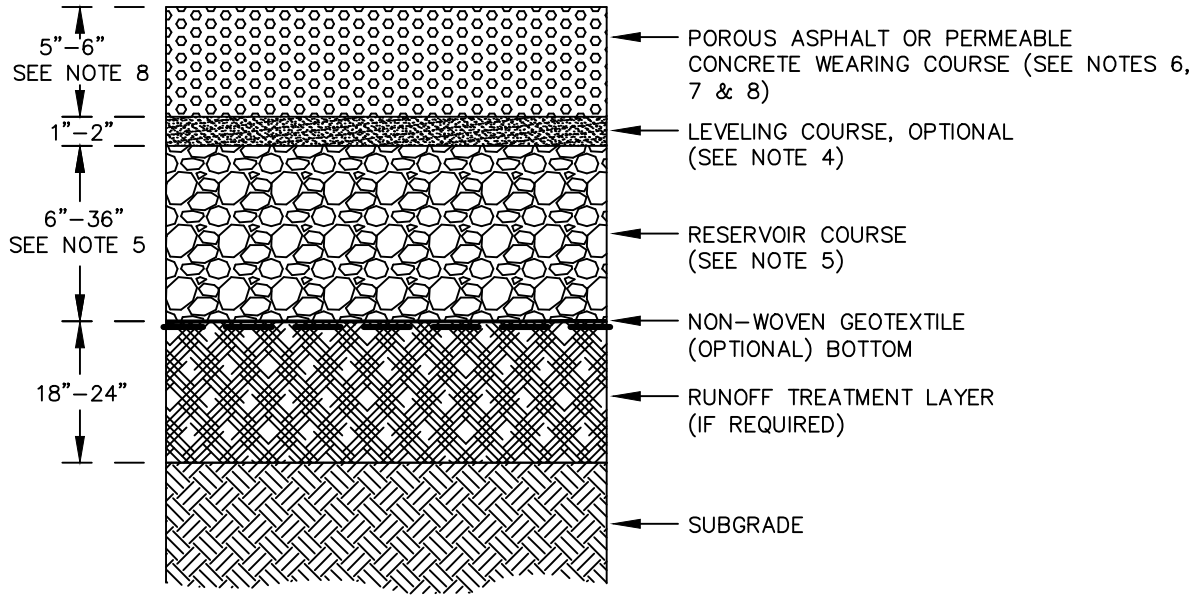

NOTES:

1. PERMEABLE PAVEMENT WITHIN CITY RIGHT–OF–WAY REQUIRES APPROVAL BY THE CITY WHEN PLACED BENEATH A TRAVELED WAY. THESE GUIDELINES PROVIDE MINIMUM MATERIAL DEPTHS. THE STRUCTURAL CAPACITY OF PAVEMENT SECTIONS WHEN SUBJECT TO VEHICULAR LOADS DEPENDS ON SEVERAL FACTORS AND MUST BE DESIGNED BY A LICENSED PROFESSIONAL ENGINEER.
2. LONGITUDINAL SLOPE, 0 TO 5% MAX. FOR POROUS ASPHALT, 6% MAX. FOR PERVIOUS CONCRETE.
3. USE CHECK DAM OR OTHER METHODS TO MAXIMIZE PONDING IN THE SUBSURFACE FOR LONGITUDINAL SLOPES EXCEEDING 2%. SEE STANDARD DETAIL NDP–15.
4. LEVELING COURSE MATERIALS: 1.5" TO U.S. NO. 8 UNIFORMLY GRADED, CRUSHED (ANGULAR), THOROUGHLY WASHED STONE.
5. RESERVOIR COURSE MINIMUM DEPTH OF 6" WITHOUT UNDERDRAIN, 22" MINIMUM WITH UNDERDRAIN.
6. PERVIOUS CONCRETE MUST BE INSTALLED BY A CERTIFIED PERVIOUS CONCRETE INSTALLER. POROUS ASPHALT MUST BE INSTALLED BY AN EXPERIENCED POROUS ASPHALT INSTALLER.
7. SEE NDP CHAPTER D6–05 HEREIN FOR ALL MATERIALS.
8. THE PAVEMENT THICKNESS SHALL BE A MINIMUM OF FIVE INCHES FOR A SIDEWALK AND SIX INCHES AT ALL DRIVEWAY APPROACHES.

City of Bellevue

STORM AND SURFACE WATER UTILITY

TITLE

POROUS ASPHALT OR PERVIOUS CONCRETE PAVEMENT SECTION

NO. NDP–11

JANUARY 2017

NO SCALE

CONCRETE
BLOCK OR "PAVER" SYSTEMS

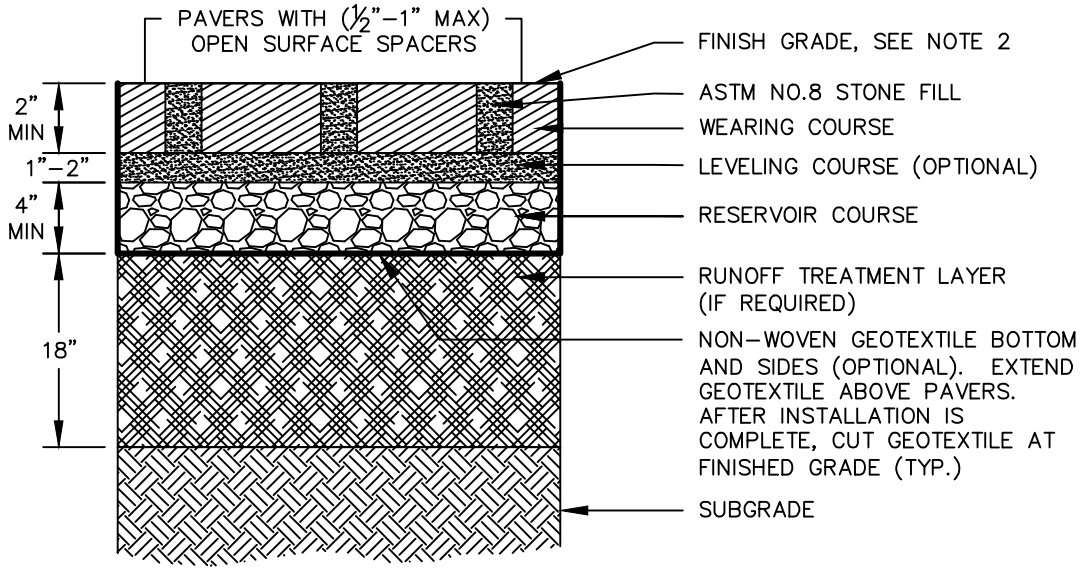

GRASS PAVING

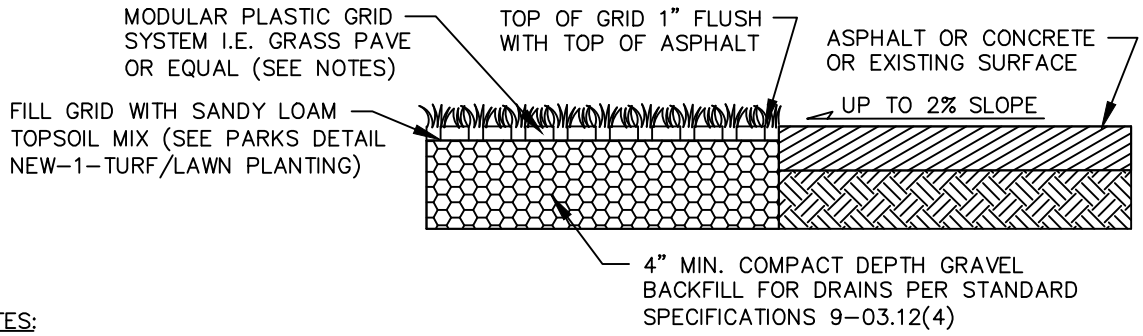

NOTES:

1. PERVIOUS PAVEMENT WITHIN CITY RIGHT–OF–WAY REQUIRES APPROVAL BY THE CITY WHEN PLACED BENEATH A TRAVELED WAY. THESE GUIDELINES PROVIDE A MINIMUM DEPTH FOR THE HYDROLOGIC PERFORMANCE OF THE PERVIOUS PAVEMENT. THE STRUCTURAL CAPACITY OF PAVEMENT SECTIONS WHEN SUBJECT TO VEHICULAR LOADS DEPENDS ON SEVERAL FACTORS AND MUST BE DESIGNED BY A LICENSED PROFESSIONAL ENGINEER.
2. LONGITUDINAL SLOPE, 0 TO 10% MAX.
3. USE CHECK DAM OR OTHER METHODS TO MAXIMIZE PONDING IN THE SUBSURFACE IF SLOPE EXCEEDS 2%, PER STANDARD DETAIL NDP–15.
4. INSTALL PER LID TECHNICAL GUIDANCE MANUAL FOR PUGET SOUND (2012 OR CURRENT) OR MANUFACTURER.
5. SEE CHAPTER D6–05 FOR MATERIALS.
6. SOME INTERLOCKING CONCRETE PAVER SYSTEMS RECOMMEND A BASE COURSE BETWEEN THE LEVELING AND RESERVOIR COURSES. FOLLOW MANUFACTURED SPECIFICATIONS.

City of Bellevue

STORM AND SURFACE WATER UTILITY

TITLE

PERMEABLE PAVER SYSTEMS

NO. NDP–12

JANUARY 2017

NO SCALE

PLAN

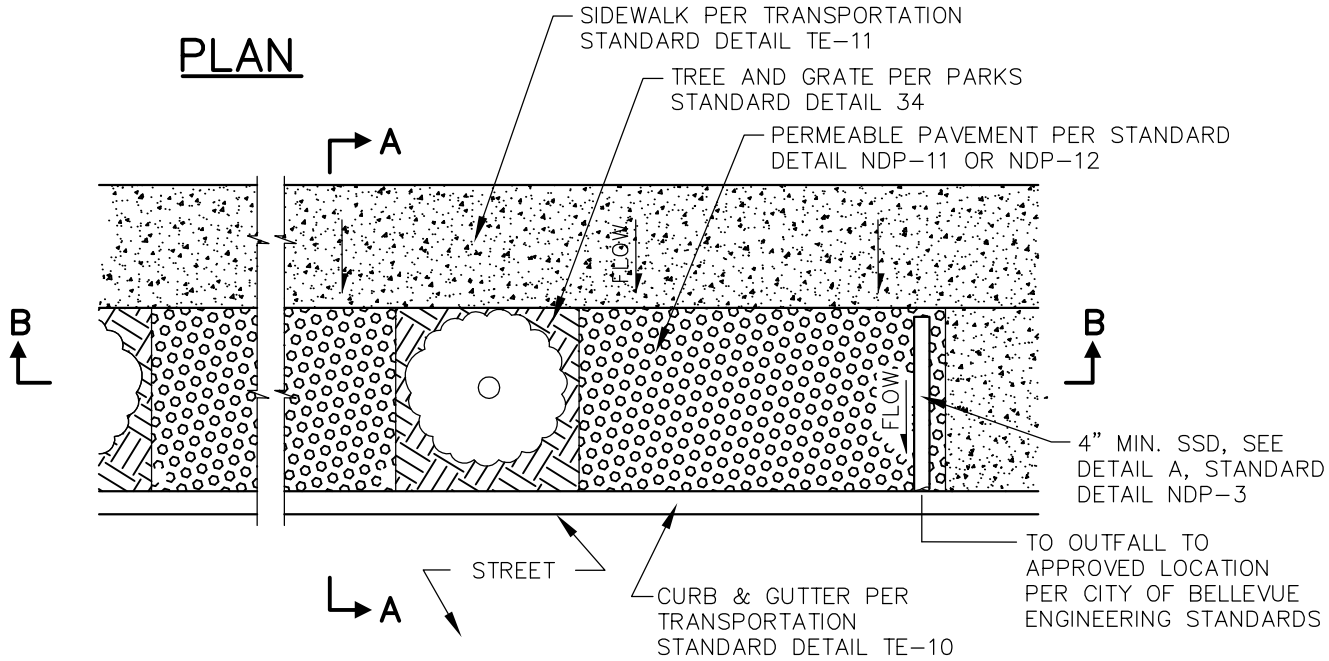

SECTION A-A

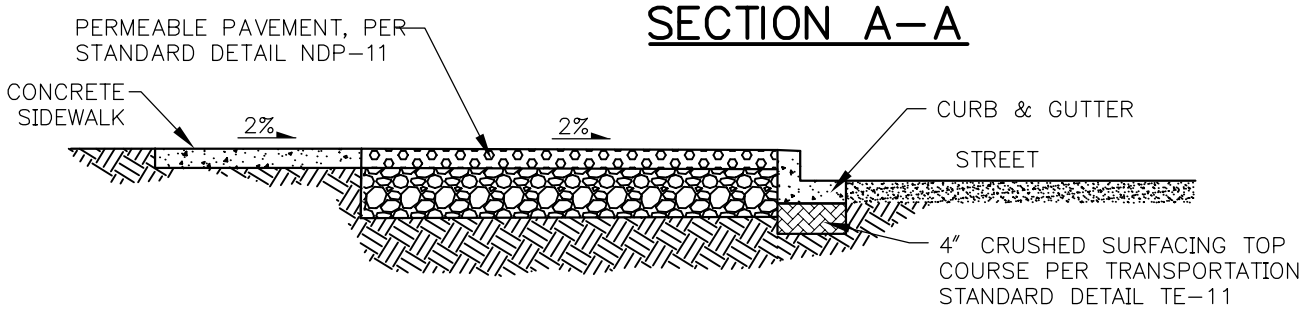

SECTION B-B

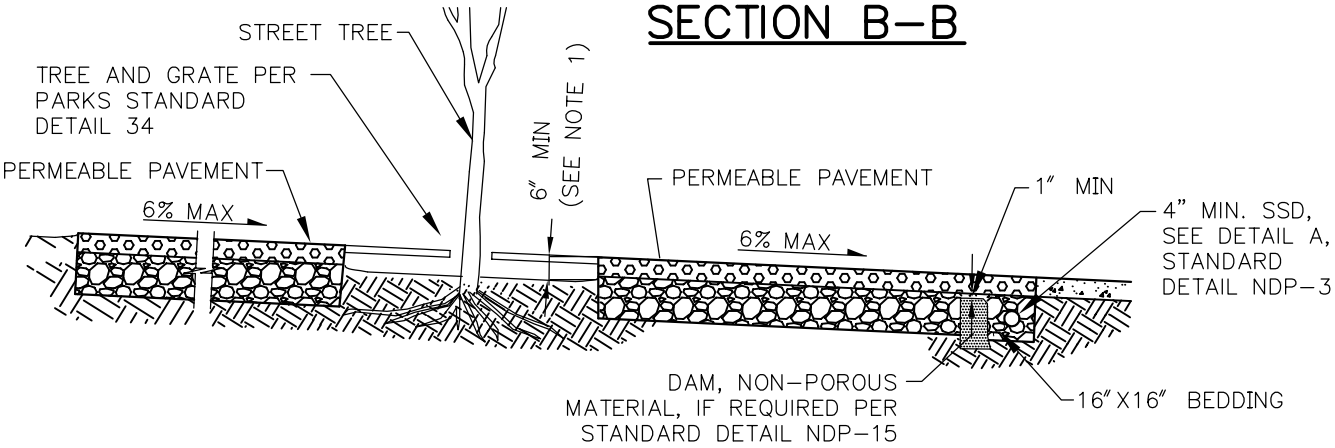

NOTE:

1. 6" MIN. DEPTH IN THE TREE PIT APPLIES TO PERVIOUS CEMENT CONCRETE SIDEWALK ONLY. IF OTHER PERMEABLE PAVER MATERIAL USED, NO MIN. DISTANCE REQUIRED.
2. ROOT BARRIER AS NECESSARY AS DIRECTED BY THE ENGINEER.

City of Bellevue

STORM AND SURFACE WATER UTILITIES

TITLE

PERMEABLE PAVEMENT SIDEWALK IN PLANTING STRIP

NO. NDP-13

JANUARY 2017

NO SCALE

PERMEABLE PAVEMENT SIDEWALK ADJACENT TO CURB

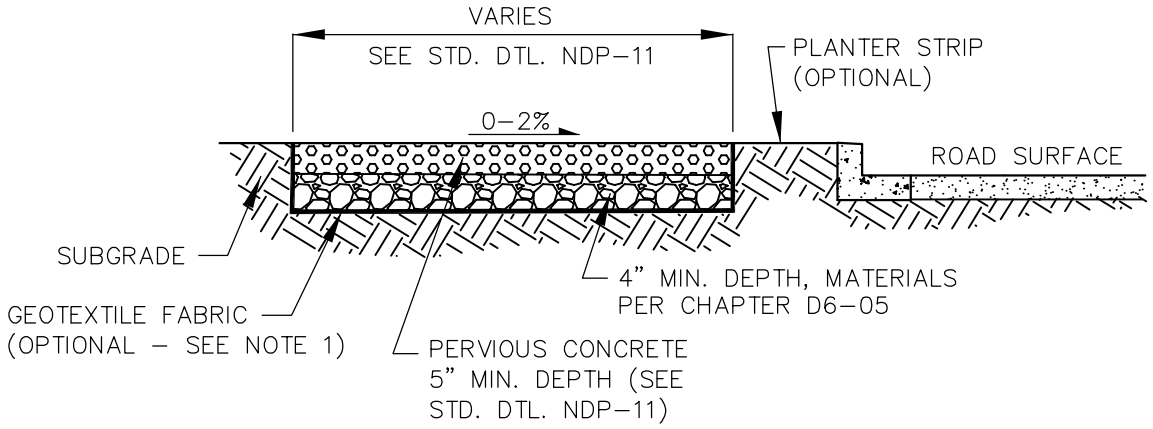

PERMEABLE PAVEMENT SIDEWALK ADJACENT TO BIORETENTION OR DITCH

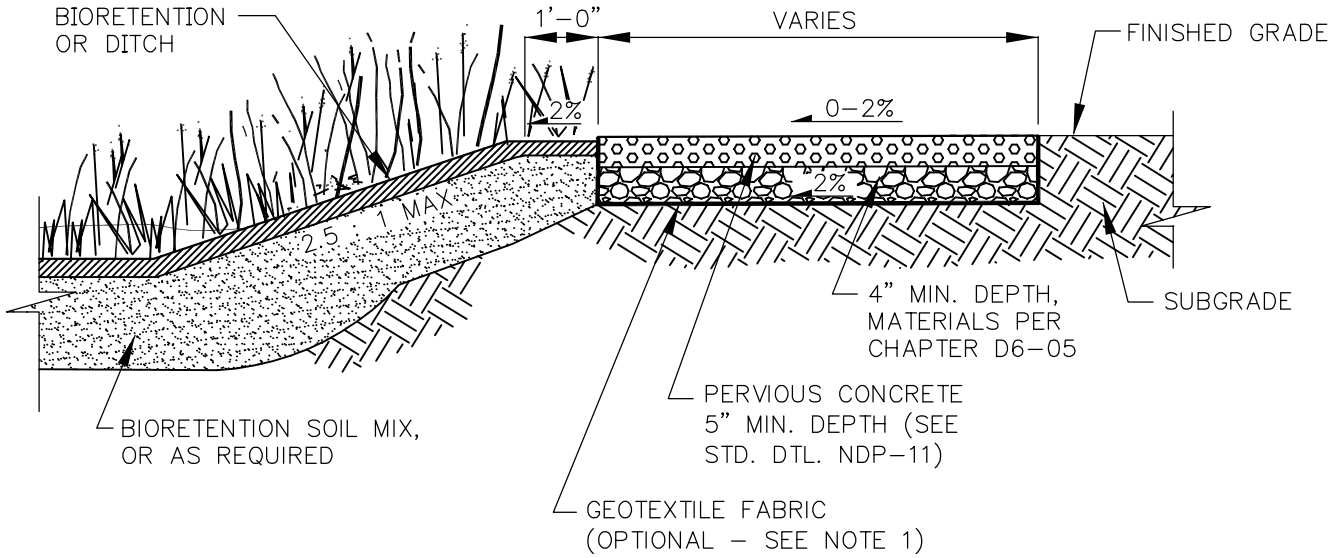

NOTES:

1. GEOTEXTILE FOR UNDERGROUND SEPARATION REQUIRED ONLY PER ENGINEER DESIGN.
2. SUBGRADE SHOULD NOT BE COMPACTED.
3. COVER TO PROTECT SURFACE UNTIL FINAL LANDSCAPING COMPLETE.
4. ROOT BARRIER AS NECESSARY AS DIRECTED BY THE ENGINEER.

City of Bellevue

STORM AND SURFACE WATER UTILITY

TITLE

PERMEABLE PAVEMENT SIDEWALK

JANUARY 2017

NO SCALE

NO. NDP-14

INTERCEPTOR INFILTRATION TRENCH

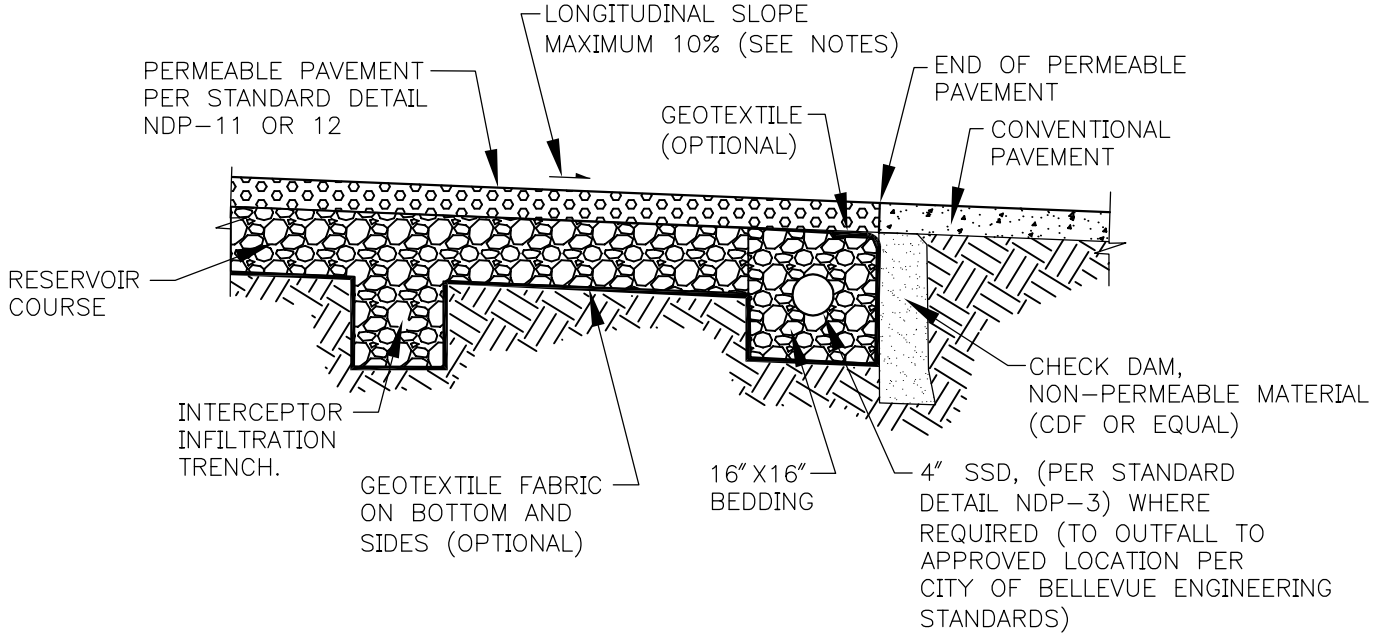

CHECK DAM

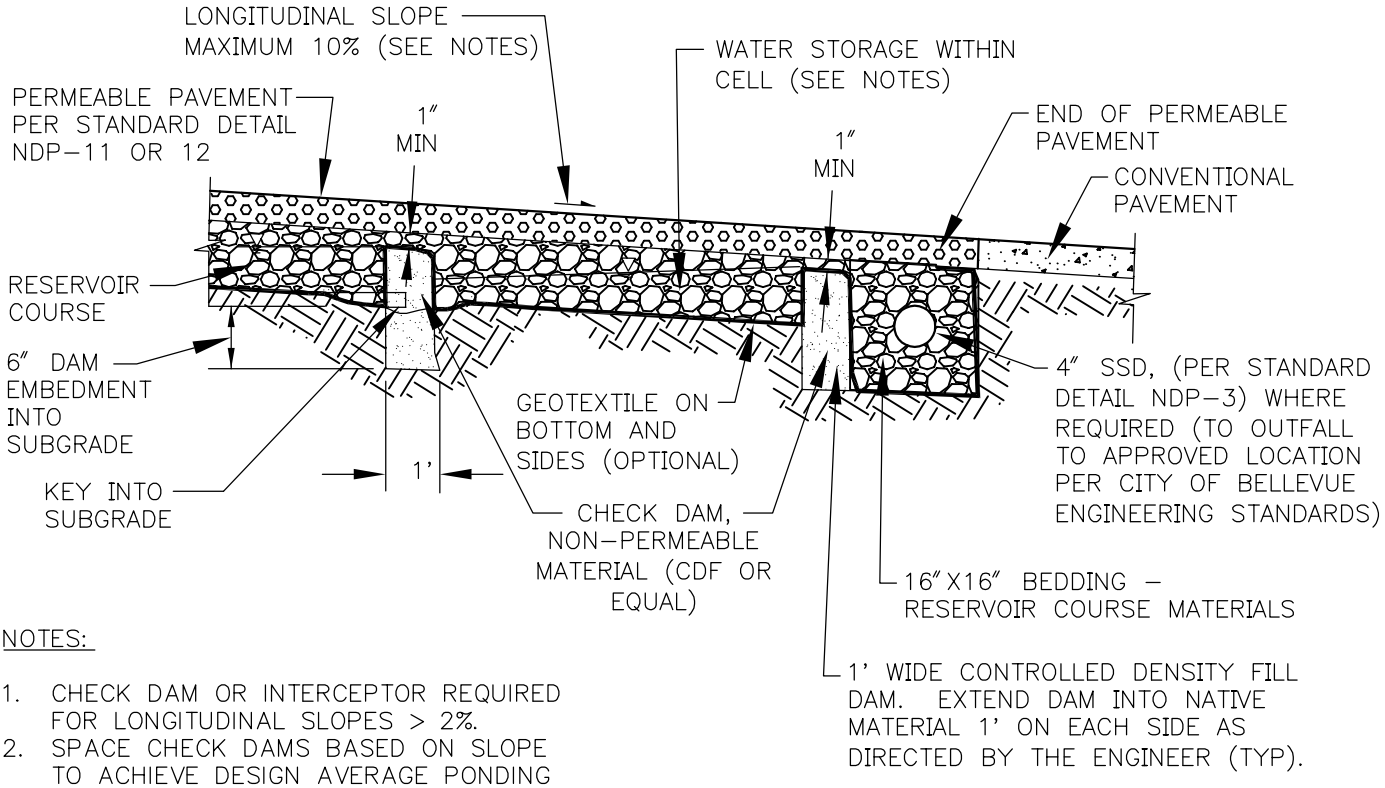

NOTES:

1. CHECK DAM OR INTERCEPTOR REQUIRED FOR LONGITUDINAL SLOPES > 2%.
2. SPACE CHECK DAMS BASED ON SLOPE TO ACHIEVE DESIGN AVERAGE PONDING DEPTH BEFORE OVERTOPPING DAM.
3. CALCULATE STORAGE VOLUME BETWEEN CHECK DAMS BASED ON CHECK DAM HEIGHT AND SLOPE FOR MODELING.
4. LONGITUDINAL SLOPE MAXIMUM VARIES WITH WEARING COURSE MATERIAL PER STANDARD DETAILS NDP-11 AND NDP-12.

City of Bellevue

STORM AND SURFACE WATER UTILITY

TITLE

CHECK DAM AND INTERCEPTOR FOR PERMEABLE PAVEMENT ON SLOPES

NO. NDP-15

JANUARY 2017

NO SCALE

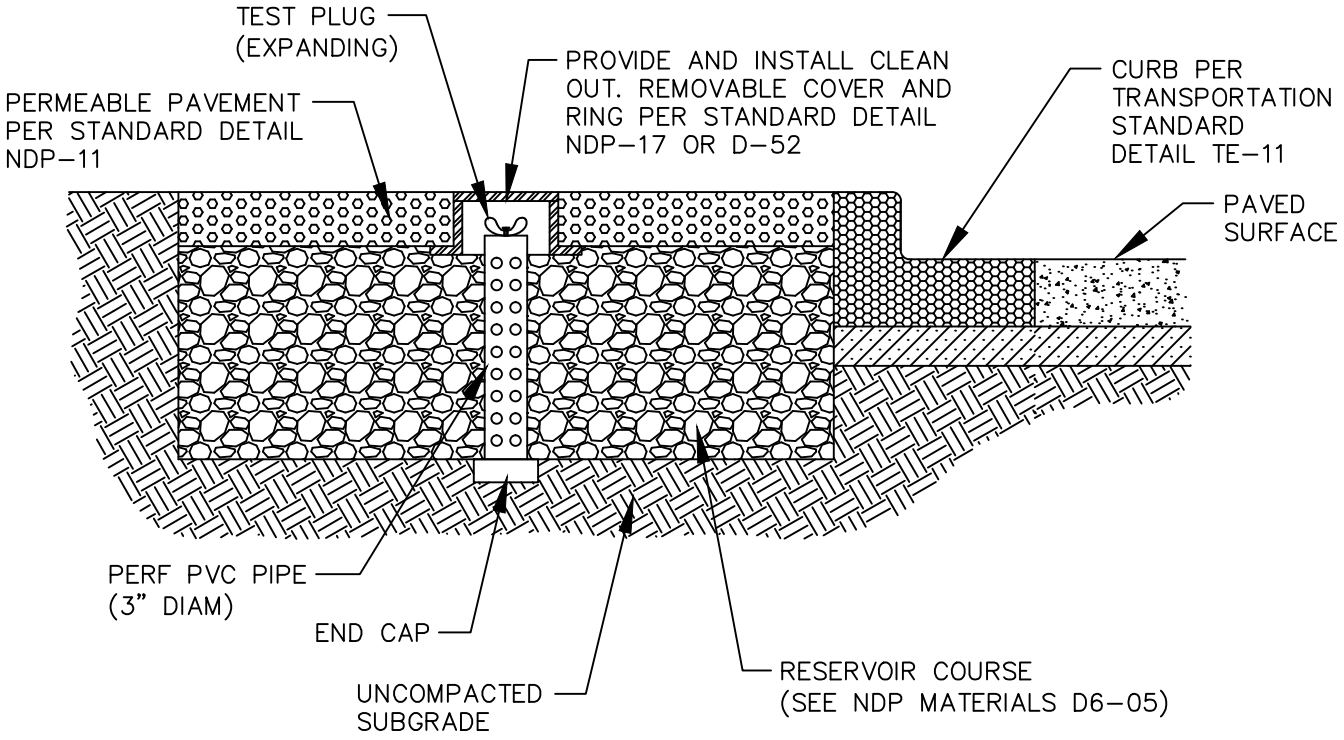

City of Bellevue

STORM AND SURFACE WATER UTILITY

TITLE

OBSERVATION PORT FOR PERMEABLE PAVEMENT

NO. NDP–16

JANUARY 2017

NO SCALE

A.) OUTSIDE OF R.O.W. OR EASEMENT

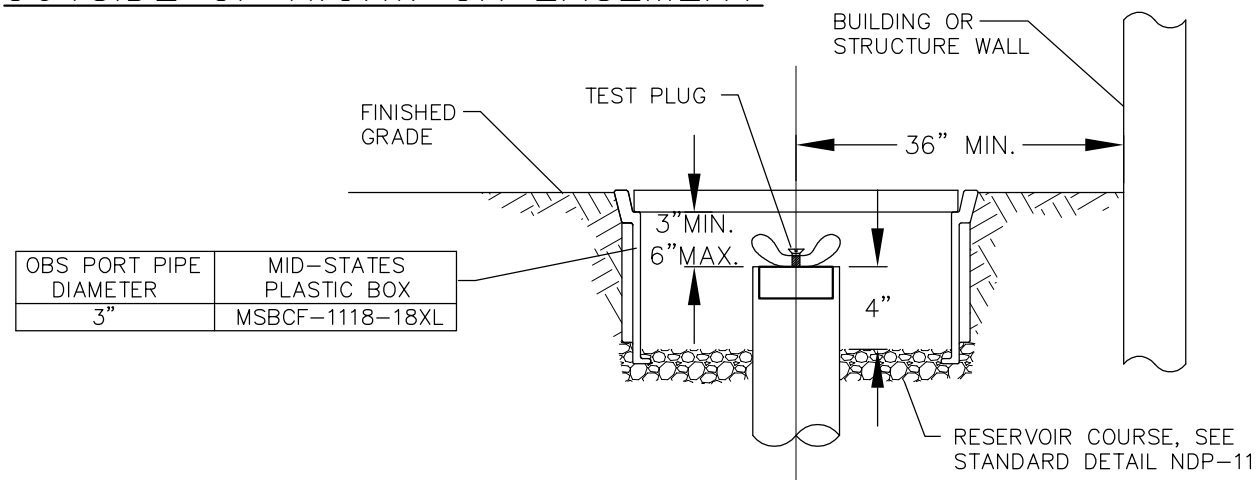

OBS PORT PIPE DIAMETER	MID-STATES PLASTIC BOX
3"	MSBCF-1118-18XL

B.) RIGHT-OF-WAY OR EASEMENT

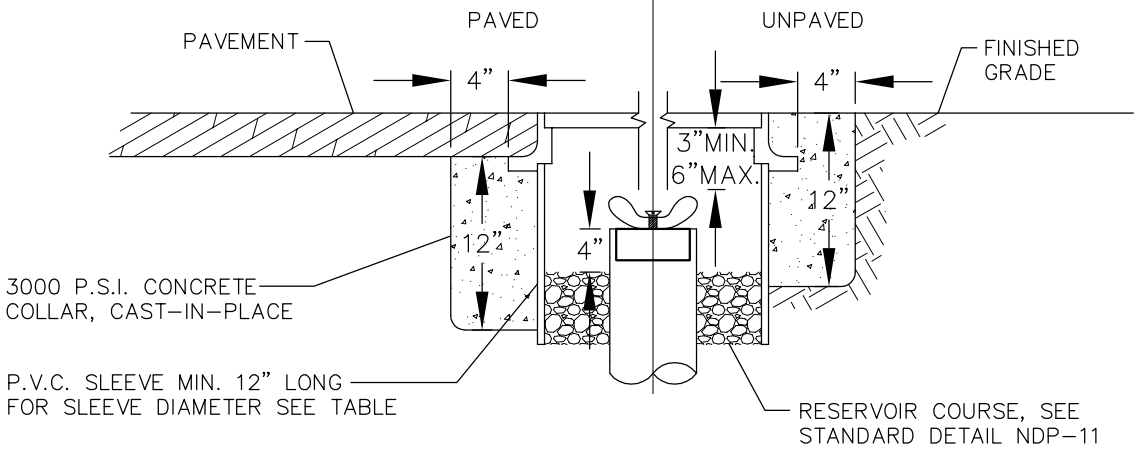

OBS PORT PIPE DIAMETER	RING AND COVER DIAMETER	P.V.C SLEEVE DIAMETER
3"	12"	12"

NOTES:

1. BOLT-LOCKING CAST IRON RING AND COVER SHALL BE USED IN RIGHT-OF-WAY AND EASEMENTS AND MUST BE RATED HS-20 IF USED IN TRAFFIC AREAS. SEE TABLE FOR SIZES.
2. MID-STATES PLASTIC BOX OR EQUAL MAY BE USED IF OBSERVATION PORT IS OUTSIDE OF RIGHT-OF-WAY OR EASEMENT. SEE TABLE FOR SIZES. THE COVER FOR THE PLASTIC BOX SHALL BE DUCTILE IRON AND READ "STORM" OR BE BLANK (NO LABEL).
3. CAST IRON COVER SHALL READ "STORM, DO NOT BURY", OR EQUIVALENT.
4. LOCKING BOLTS SHALL BE 5/8"-11 N.C. 304 STAINLESS STEEL SOCKET (ALLEN) HEAD, 2" LONG.
5. 14" BOLT-LOCKING CAST IRON COVER SHALL BE EQUAL TO INLAND FOUNDRY NUMBER 209, OR 210. FOR TRAFFIC AREAS, SEE STANDARD DETAIL D-52.
6. SPECIAL "DECORATIVE" CASTING MAY BE USED IF PREAPPROVED BY CITY OF BELLEVUE.

JANUARY 2017 NO SCALE

City of Bellevue

STORM AND SURFACE WATER UTILITY

TITLE

OBSERVATION PORT COVERS FOR PERMEABLE PAVEMENT

NO. NDP-17

ROOF RECYCLING COLLECTION SYSTEM

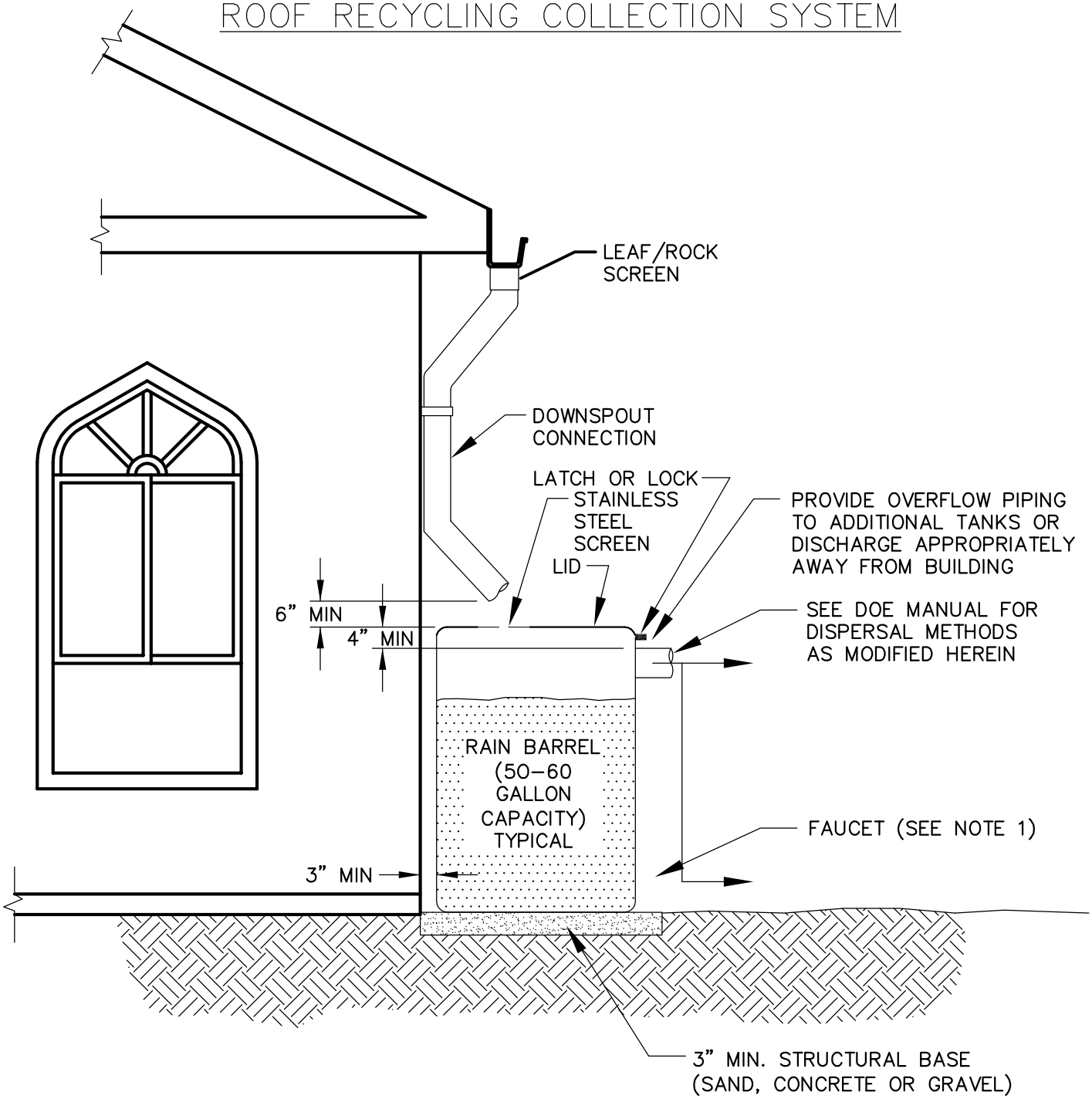

NOTES:

1. HOSE BIB FOR ATTACHING GARDEN HOSE FOR HAND WATERING.
2. SEE NDP CHAPTER D6–04 HEREIN FOR ALL MATERIALS.

City of Bellevue

STORM AND SURFACE WATER UTILITY

TITLE

RAIN RECYCLING SYSTEM – RAIN BARREL

NO. NDP–18

JANUARY 2017

NO SCALE

ROOF RECYCLING COLLECTION SYSTEM

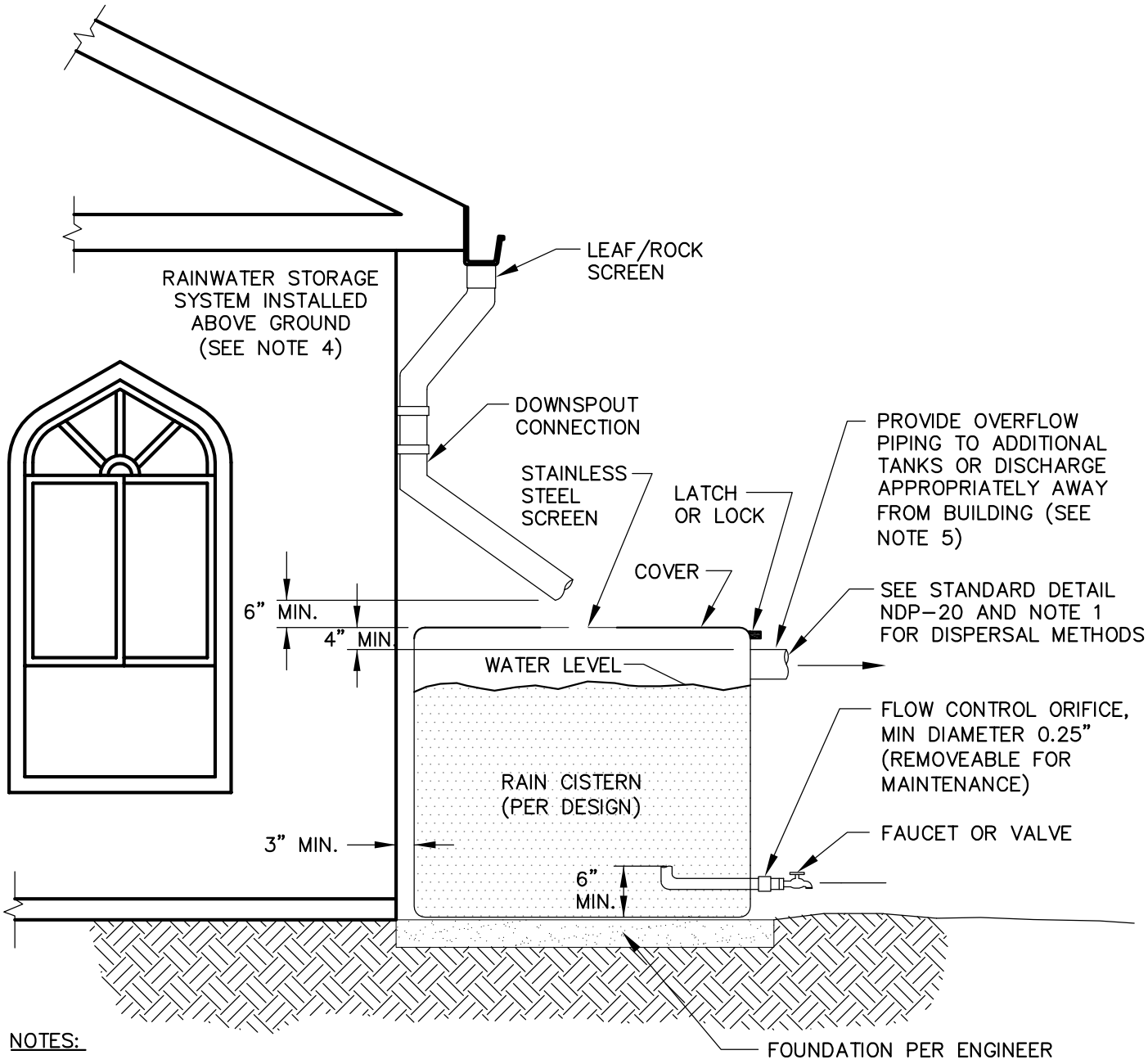

NOTES:

1. SEE DOE MANUAL, CHAPTER 3, VOLUME III AND CHAPTER 5, VOLUME V FOR DISPERSION OPTIONS, OR CONNECT TO IRRIGATION SYSTEM WITH PROPER BACKFLOW PROTECTION.
2. SEE NDP CHAPTER D6-04 HEREIN FOR MATERIALS AND QUALIFIED PRODUCTS.
3. ELECTRICAL PERMIT REQUIRED IF WATER PUMP IS TO BE INSTALLED.
4. STORAGE SYSTEM INSTALLATION UNDERGROUND WITH ENGINEERED DESIGN ONLY.
5. REDUNDANT OVERFLOW SYSTEMS ARE RECOMMENDED.

City of Bellevue

STORM AND SURFACE WATER UTILITY

TITLE

RAIN RECYCLING SYSTEM – CISTERN

NO. NDP-19

JANUARY 2017

NO SCALE

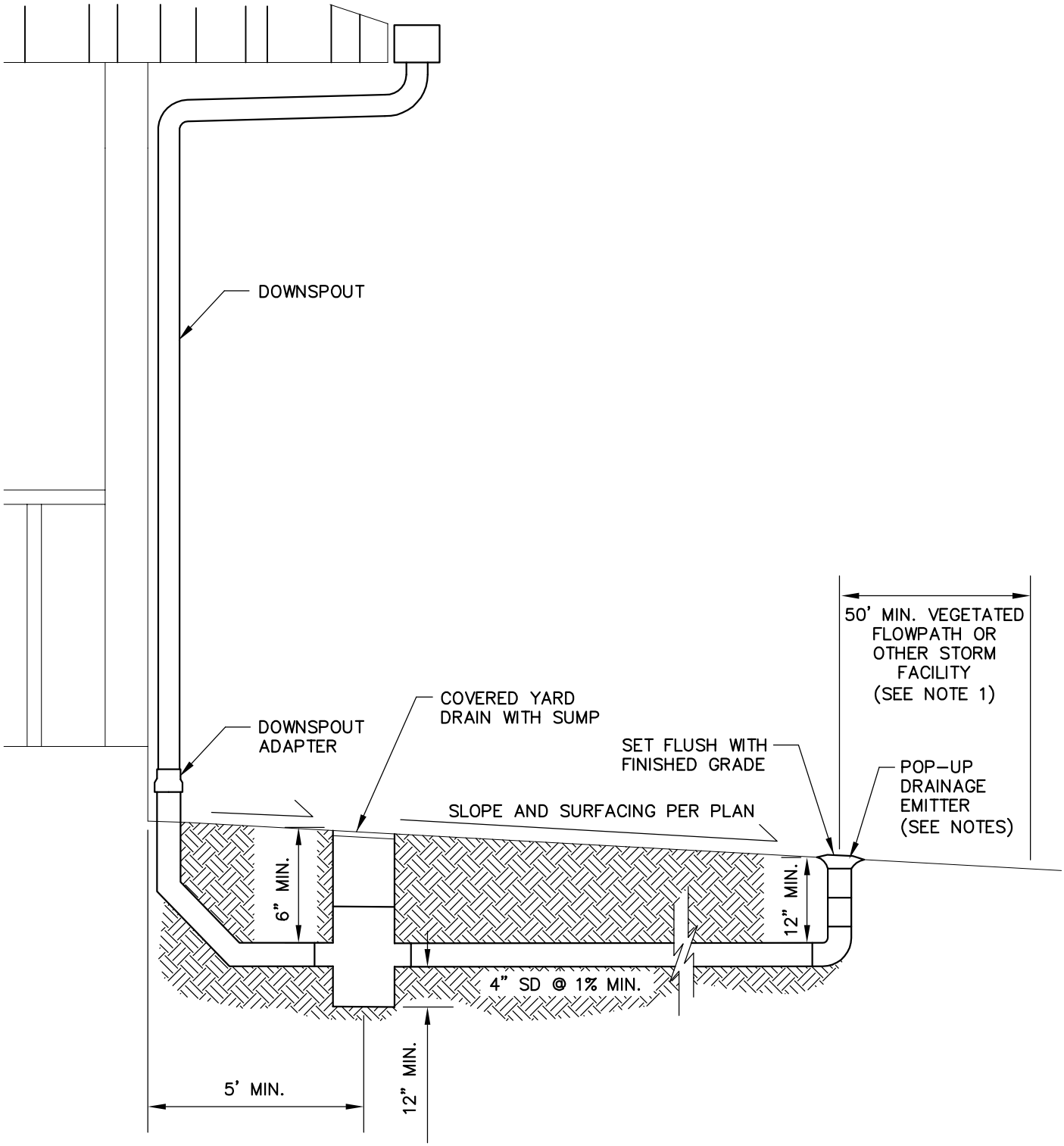

NOTES:

1. DESIGN EMITTER TO DISCHARGE ONTO VEGETATED AREA WITH AMENDED SOILS OR OTHER SUITABLE LANDSCAPED AREA, INFILTRATION OR DRAINAGE SYSTEM PER THE DOE MANUAL AS MODIFIED HEREIN.
2. DO NOT CONNECT FOOTING DRAIN.
3. SEE NDP CHAPTER D6-04 HEREIN FOR ALL MATERIALS.

City of Bellevue

STORM AND SURFACE WATER UTILITY

TITLE

POP-UP DRAINAGE EMITTER

NO. NDP-20

JANUARY 2017

NO SCALE

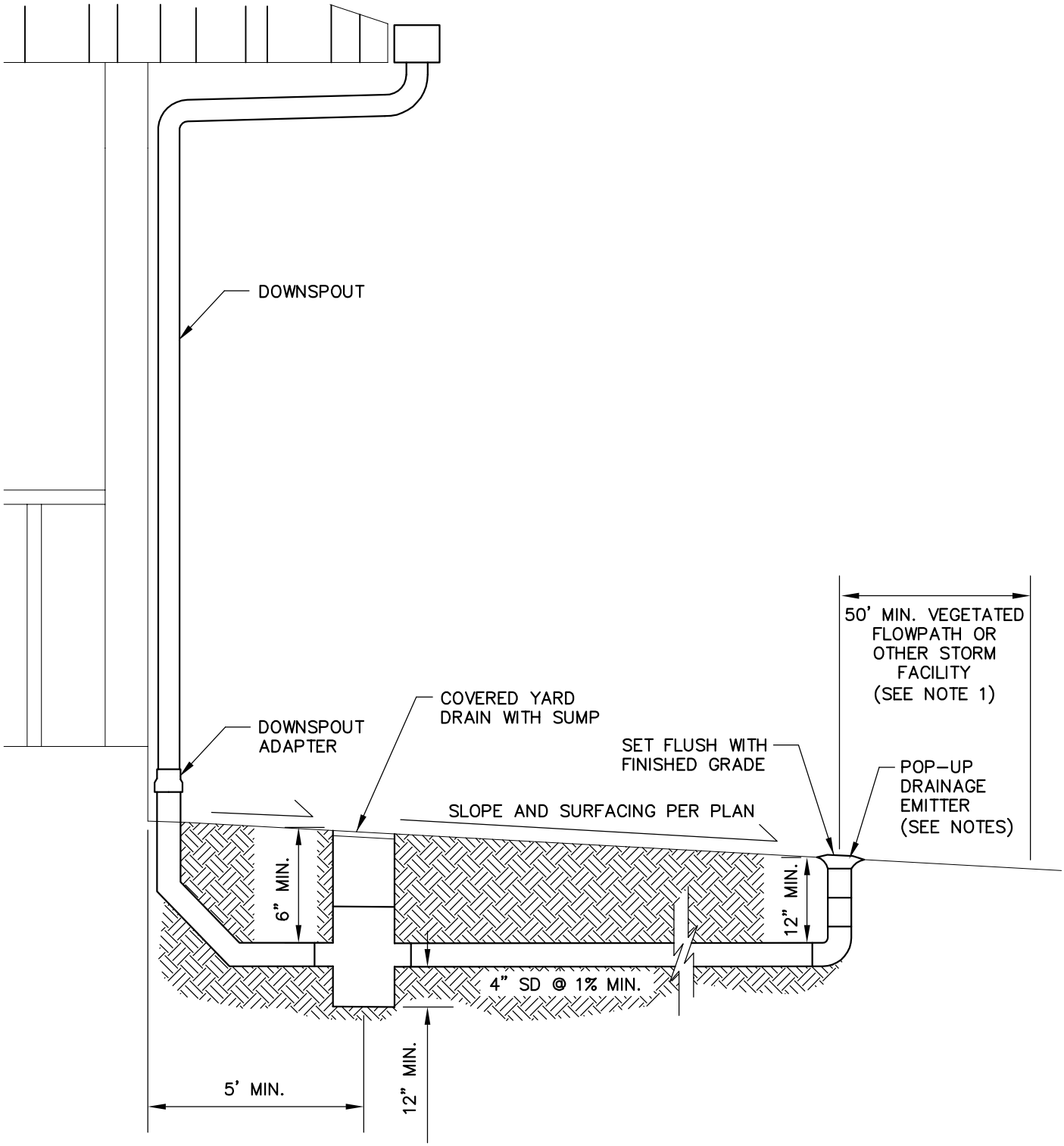

NOTES:

1. DESIGN EMITTER TO DISCHARGE ONTO VEGETATED AREA WITH AMENDED SOILS OR OTHER SUITABLE LANDSCAPED AREA, INFILTRATION OR DRAINAGE SYSTEM PER THE DOE MANUAL AS MODIFIED HEREIN.
2. DO NOT CONNECT FOOTING DRAIN.
3. SEE NDP CHAPTER D6-04 HEREIN FOR ALL MATERIALS.

City of Bellevue

STORM AND SURFACE WATER UTILITY

TITLE

POP-UP DRAINAGE EMITTER

NO. NDP-20

JANUARY 2017

NO SCALE

REVERSE SLOPE SIDEWALK

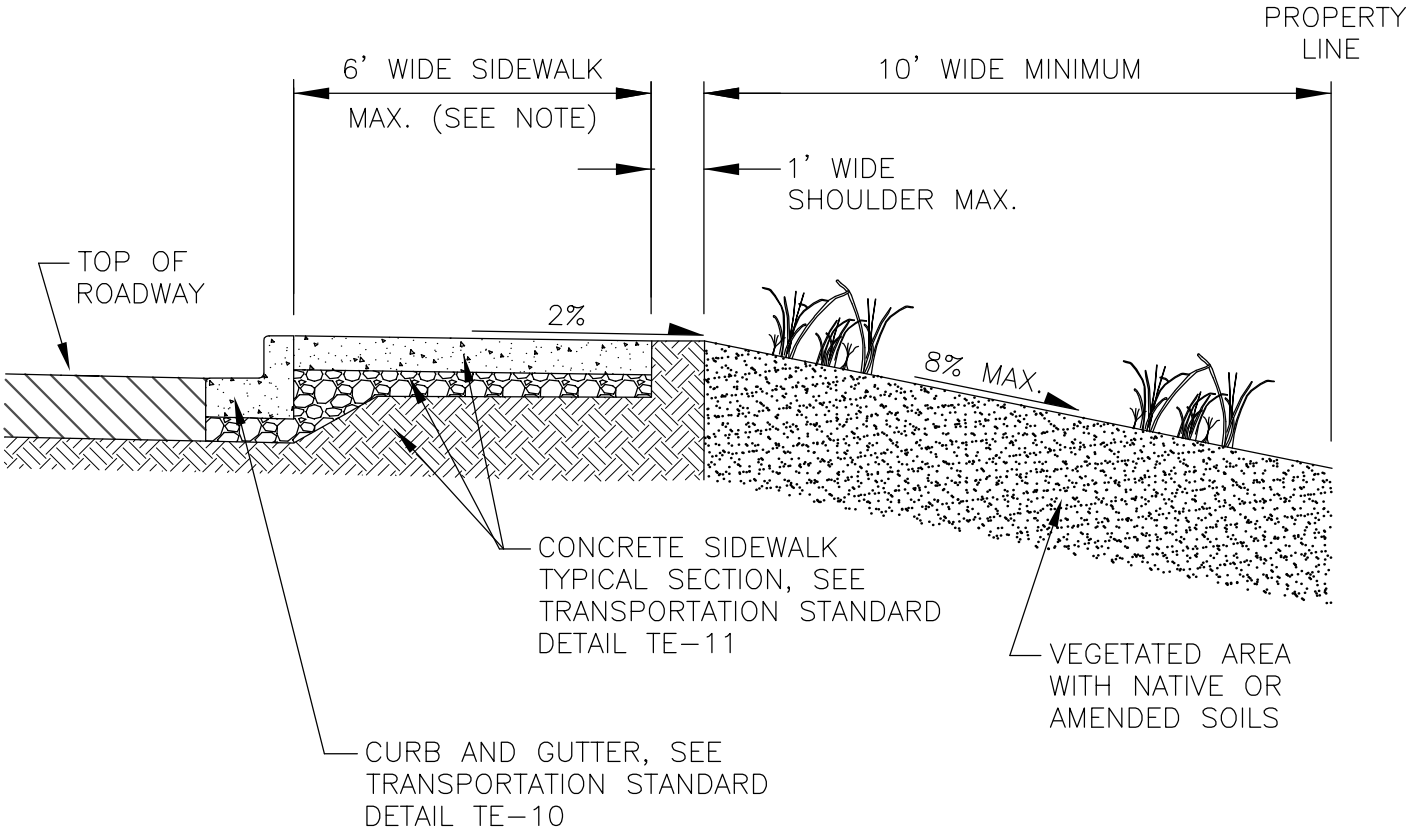

NOTE
LONGITUDINAL SLOPE SHALL BE 10% MAXIMUM

City of Bellevue

STORM AND SURFACE WATER UTILITY

TITLE

REVERSE SLOPE SIDEWALK

JANUARY 2017

NO SCALE

NO. NDP-21

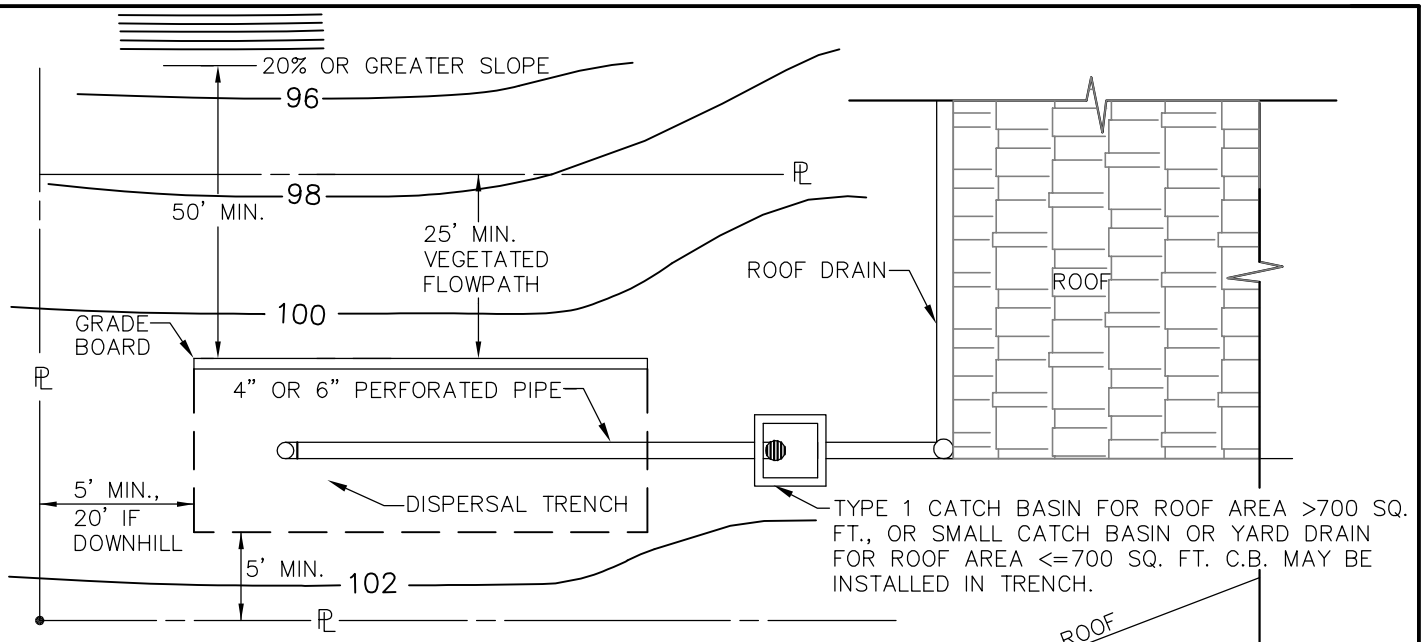

PLAN VIEW

NO SCALE

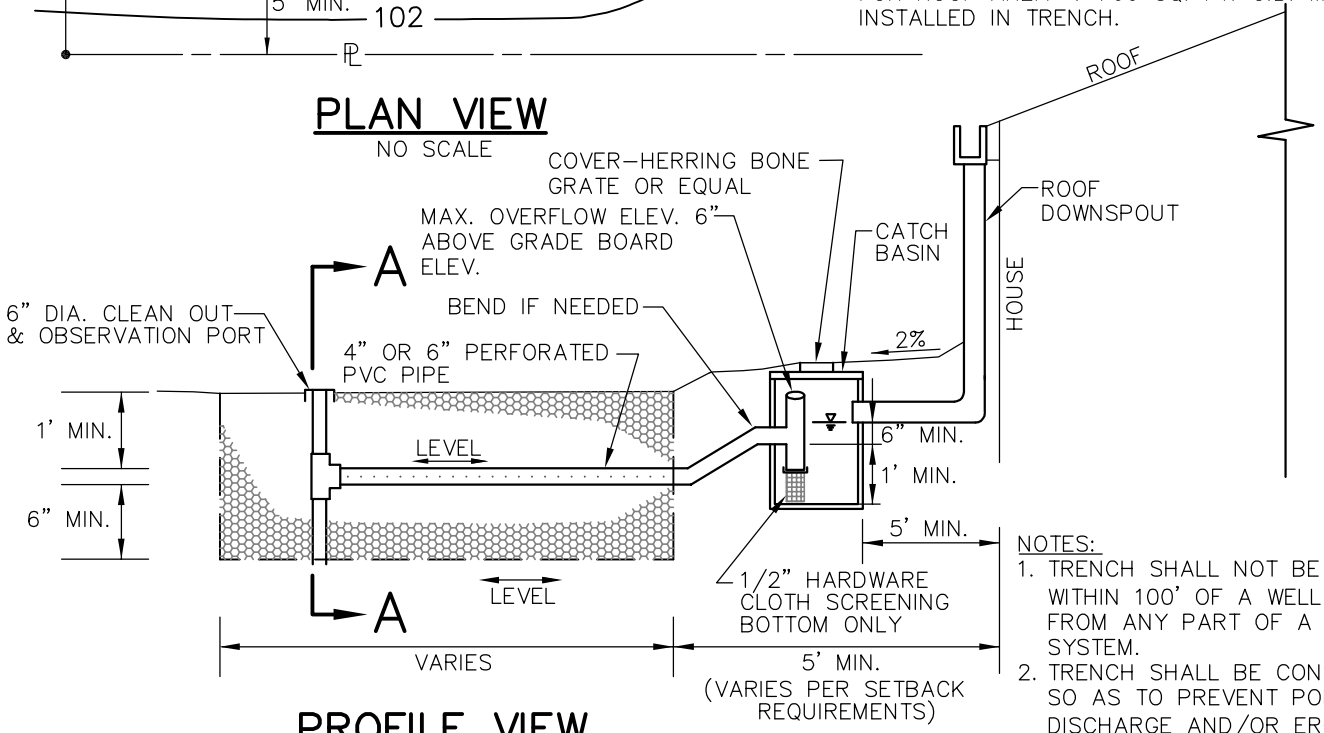

PROFILE VIEW

NO SCALE

NOTES:

1. TRENCH SHALL NOT BE LOCATED WITHIN 100' OF A WELL OR 10' FROM ANY PART OF A SEPTIC SYSTEM.
2. TRENCH SHALL BE CONSTRUCTED SO AS TO PREVENT POINT DISCHARGE AND/OR EROSION.
3. IF NO GRAVITY ACCESS TO DOWNSTREAM CONVEYANCE FACILITY AND FLOW PATH REQUIREMENT CAN NOT BE MET, MUST BE PUMPED TO APPROVED DISCHARGE.
4. GRADE BOARD AND SUPPORT POST UNTREATED, CEDAR OR RECYCLED PLASTIC. SPACE SUPPORT POSTS EVERY 10' MIN. TO KEEP GRADE BOARD LEVEL.
5. LEAVE ROCK PERMANENTLY EXPOSED. DO NOT FILL.

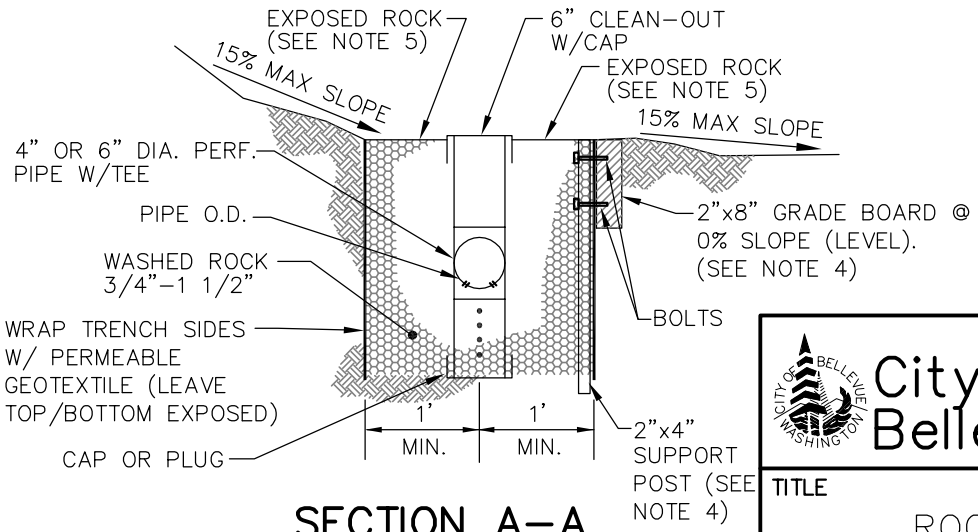

SECTION A-A

NO SCALE

City of Bellevue

STORM AND SURFACE WATER UTILITY

TITLE

ROOF DOWNSPOUT DISPERSION TRENCH

NO. NDP-22

JANUARY 2017

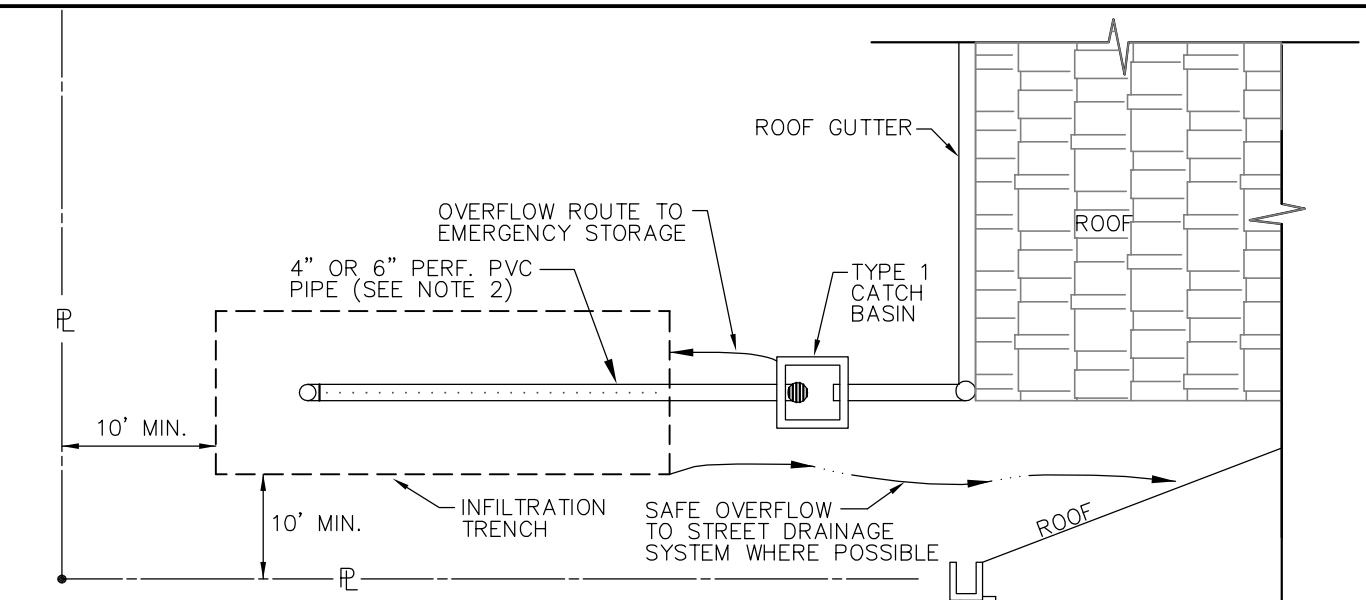

PLAN VIEW

NO SCALE

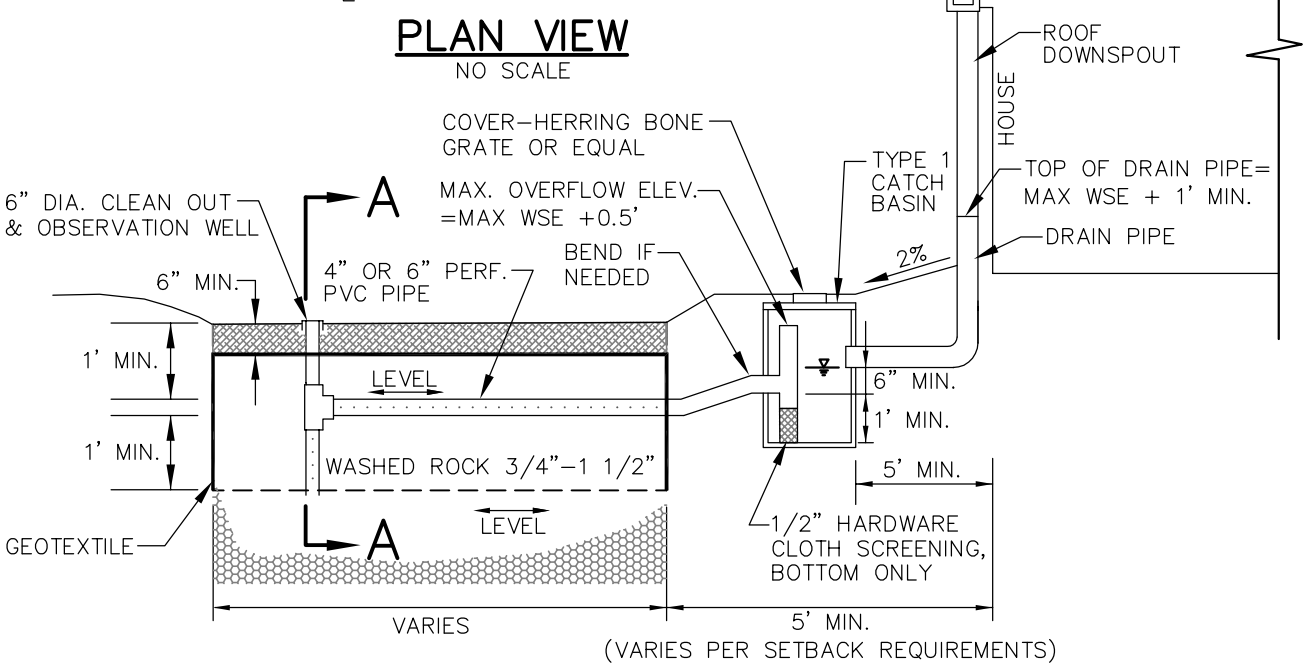

PROFILE VIEW

NO SCALE

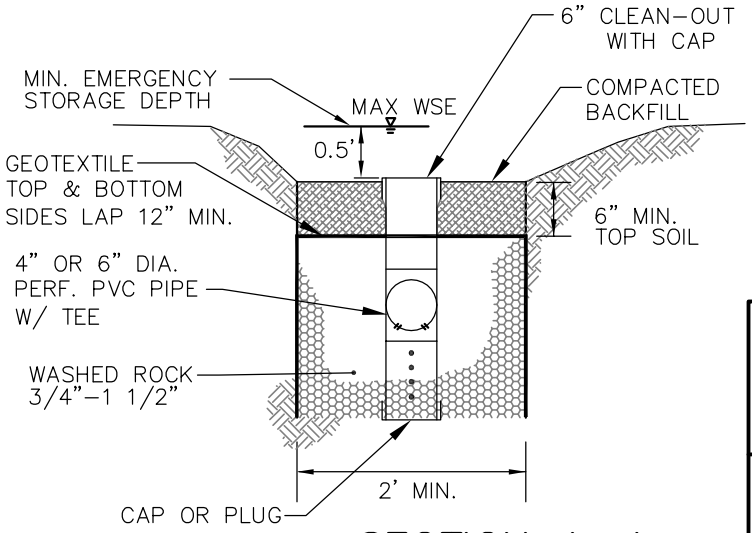

SECTION A–A

NO SCALE

NOTES:

1. TRENCH SHALL NOT BE LOCATED WITHIN 100' OF A WELL OR 30' FROM ANY PART OF A SEPTIC SYSTEM.
2. CENTER PERF. PIPE HORIZONTALLY IN TRENCH.
3. REMOVE SEDIMENT AND FLOATABLES FROM TYPE 1 CATCH BASIN AT LEAST ANNUALLY.

City of Bellevue

STORM AND SURFACE WATER UTILITY

TITLE

ROOF DOWNSPOUT INFILTRATION TRENCH

NO. NDP–23

JANUARY 2017

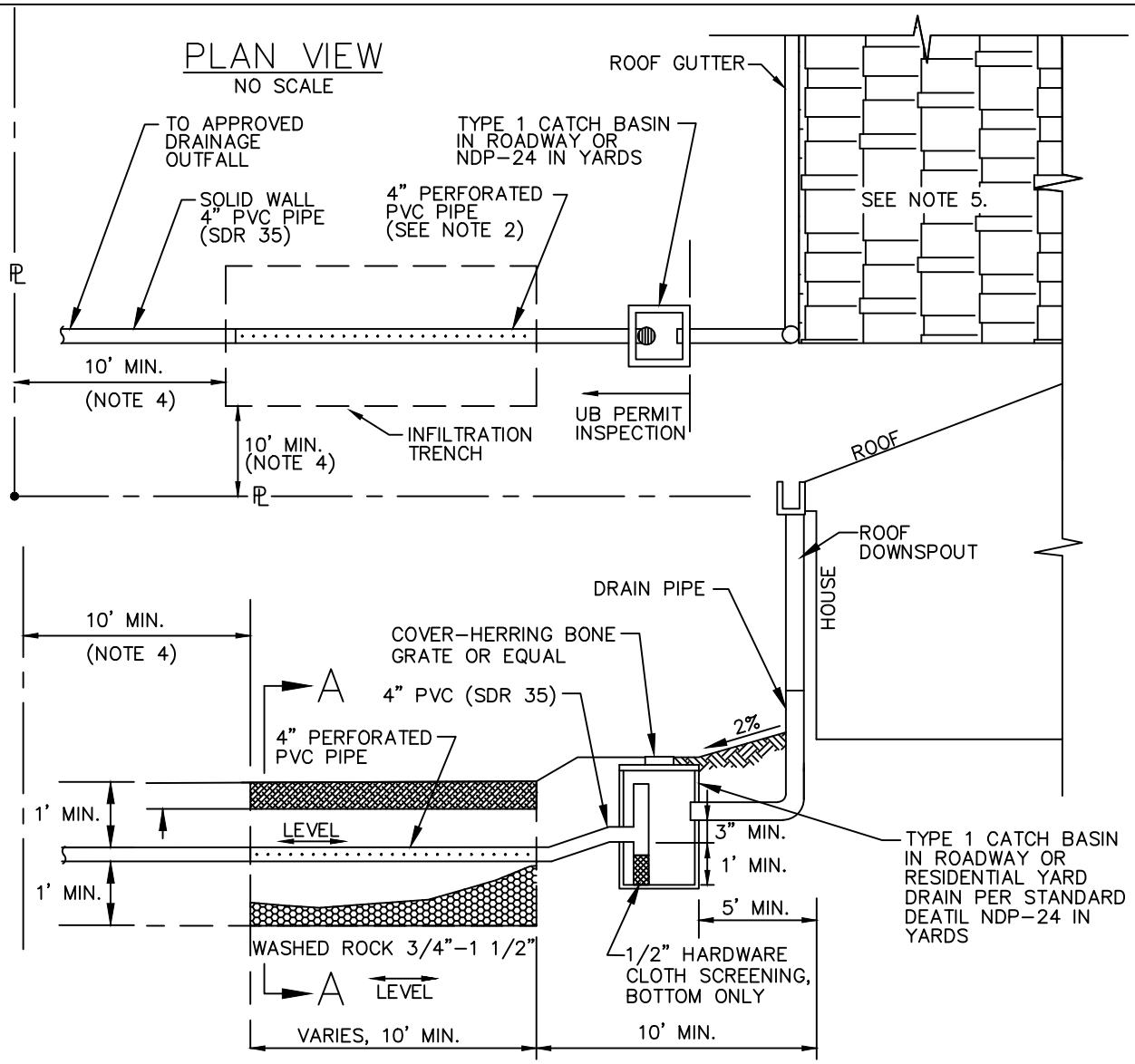

PROFILE VIEW
NO SCALE

NOTES:

1. TRENCH SHALL NOT BE LOCATED WITHIN 100' OF A WELL OR 30' FROM ANY PART OF A SEPTIC SYSTEM.
2. CENTER PERF. PIPE HORIZONTALLY IN TRENCH.
3. NOT TO BE USED IN CRITICAL AREA BUFFERS OR STEEP SLOPES > 25%.
4. DIMENSION VARIES PER SETBACK REQUIREMENTS.
5. MAXIMUM 5,000 SF. ROOF AREA PER 10' OF PERFORATED PIPE

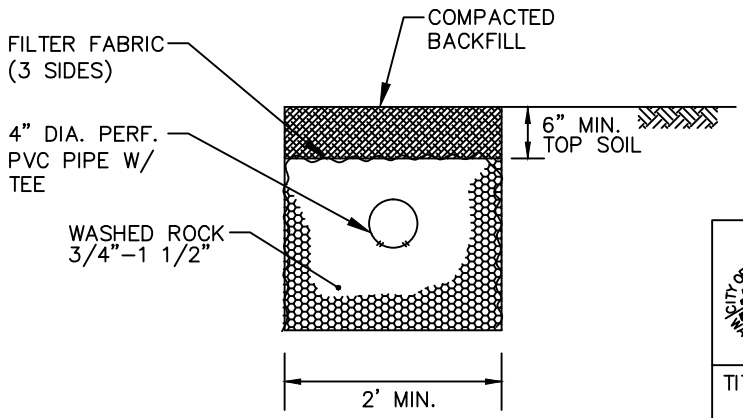

SECTION A-A
NO SCALE

City of Bellevue
STORM AND SURFACE WATER UTILITY

TITLE

RESIDENTIAL ROOF DOWNSPOUT PERFORATED PIPE CONNECTION

NO. NDP-25

JANUARY 2017

Appendix D9 – LID BMP Infeasibility Criteria

DRAFT

This page intentionally left blank.

Table D9.1 – On-site Requirement Infeasibility Criteria Checklist: All Dispersion BMP's and All Infiltration BMP's

BMP	Infeasibility Criteria	Additional Information from Applicant
All Dispersion BMP's	• Where professional geotechnical evaluation recommends dispersion not be used anywhere within project site due to reasonable concerns of erosion, slope failure, or flooding (requires a signed and stamped written determination based on site-specific conditions from an appropriately licensed professional). • Only available dispersion flow path area is within an erosion hazard or a landslide hazard area (BCC20.25H.120.A.1). • Only available dispersion flow path area is in or within 100 feet up-gradient of a known contaminated site or abandoned landfill. • Only available dispersion flow path area is in a critical area (BCC 20.25H), steep slope (>15%), or setback to steep slope (calculated as 10 times the height of the steep slope to a 500-foot maximum setback). • Only available dispersion flow path area is within 50 feet of proposed or existing septic system or drain field.	
All Infiltration BMP's	The following criteria each establish that the BMP is infeasible but only if based on an evaluation of site-specific conditions and a signed and stamped written determination from an appropriately licensed professional (e.g., engineer, geologist, hydrogeologist): • Where professional geotechnical evaluation recommends infiltration not be used due to reasonable concerns about erosion, slope failure, or flooding. • Where the only area available for siting would threaten the safety or reliability of pre-existing underground utilities, pre-existing underground storage tanks, pre-existing structures, or pre-existing road or parking lot surfaces or subgrades. • Where the only area available for siting does not allow for a safe overflow pathway. • Where infiltrating water would threaten shoreline structures such as bulkheads. The following criteria each establish that the BMP is infeasible, without further justification, though some criteria require professional services: • Where the horizontal setback criteria listed in Section D5-03.2 cannot be met. *Note:* For most infiltration BMPs, setbacks are measured from the vertical extent of maximum ponding before overflow. For bioretention and rain gardens, setback distances are as measured from the bottom edge of the bioretention or rain garden soil mix (i.e., bioretention cell bottom at the toe of the side slope). • Where the minimum vertical separation to the seasonal high water table or hydraulically-restrictive layer as listed in Section D5-03.2 would not be achieved.	

DRAFT

Table D9.2. – On-site Requirement Infeasibility Criteria Checklist: Individual BMPs

BMP	Infeasibility Criteria	Additional Information from Applicant
Post Construction Soil Quality and Depth	• Portions of the site comprised of till soils with slopes greater than 33% can be considered infeasible for this BMP.	
Full Dispersion	• The infeasibility criteria for "All Dispersion BMPs" (Table D9.1) apply. • The design criteria for full dispersion (Volume V of the DOE Manual, BMP T5.30) cannot be met. • A 65 to 10 ratio of the native vegetation area to the impervious area is unachievable. • A minimum native vegetation flow path length of 100 feet (25 feet for sheet flow from a non-native pervious surface) is unachievable.	
Downspout Dispersion	• The infeasibility criteria for "All Dispersion BMPs" (Table D9.1) apply. • The design criteria for splashblock or trench downspout dispersion (Volume III of the DOE Manual, BMP T5.10B) cannot be met. • There are no downspouts. • The flow path setbacks to property lines, structures and other flow paths (Section D5-03.1) cannot be achieved. <u>Splashblock Dispersion</u> • A minimum 10-foot-length of dispersion trench for every 700 square feet of drainage area followed by 25-foot minimum flow path is unachievable. <u>Trench Dispersion</u> • A 50-foot minimum flow path for the dispersion area or a maximum of 700 square feet of drainage area to any splashblock is unachievable.	
Sheet Flow Dispersion	• The infeasibility criteria for "All Dispersion BMPs" (Table D9.1) apply. • The design criteria for sheet flow dispersion (Volume V of the DOE Manual, BMP T5.12) cannot be met. • Positive drainage for sheet flow runoff is unachievable. • Area to be dispersed (e.g., driveway, patio) cannot be graded to have less than a 15% slope. • The flow path setbacks to property lines, structures and other flow paths (refer to Section D5-03.1) cannot be achieved.	

Concentrated Flow Dispersion	• The infeasibility criteria for "All Dispersion BMPs" (Table D9.1) apply.
	• The design criteria for concentrated flow dispersion (Volume V of the DOE Manual, BMP T5.11) cannot be met.
	• The dispersion device and flow path requirements are unachievable:
	  ○ A minimum 10-foot length of dispersion trench followed by a 25-foot minimum flow path or a rock pad with a 50-foot minimum flow path.
	  ○ A maximum of 700 square feet of drainage area to any dispersion device.	

BMP	Infeasibility Criteria	Additional Information from Applicant
	• The flow path setbacks to property lines, structures and other flow paths (refer to Section D5-03.1) cannot be achieved.	
Bioretention	• The design criteria for bioretention (Volume V of the DOE Manual, BMP T7.30) cannot be met. • Refer to the additional bioretention Infeasibility Criteria in the Volume V of the DOE Manual, Chapter 7.	
Rain Garden	• The design criteria for rain gardens (Volume V of the DOE Manual, BMP T5.14A) cannot be met. • Refer to the additional rain garden Infeasibility Criteria in the Volume V of the DOE Manual, Chapter 7.	
Perforated Stub-out Connection	• The infeasibility criteria for "All Infiltration BMPs" (Table D9.1) apply. • The design criteria for perforated stub-out connections (Volume III of the DOE Manual, BMP T5.10C) cannot be met. • The only location for the perforated pipe portion of the system is under impervious or heavily compacted (e.g., driveways and parking areas) surfaces. • A minimum of 10 feet of perforated pipe per 5,000 square feet of contributing roof area is unachievable.	
Permeable Pavement	• The Design Criteria for Permeable Pavement (Volume V of the DOE Manual, BMP T5.15) cannot be met. • Note that the infeasibility criteria for "All Infiltration BMPs" are not applicable and the minimum native soil infiltration rate differs, as described below. The following criteria each establish that the BMP is infeasible but only if based on an evaluation of site-specific conditions and a written recommendation from an appropriate licensed professional (e.g., engineer, geologist, hydrogeologist): • Where infiltrating and ponded water below permeable pavement area would compromise adjacent impervious pavements. • Where fill soils are used that can become unstable when saturated. • Where permeable pavements cannot provide sufficient strength to support heavy loads in areas with "industrial activity" as identified in 40 CFR 122.26(b)(14). • Excessively steep slopes where water within the aggregate base layer or at the sub-grade surface cannot be controlled by detention structures and may cause erosion and structural failure, or where surface runoff velocities may preclude adequate infiltration at the pavement surface. The following criteria each establish that the BMP is infeasible, without further justification, though some criteria require professional services: • Where subgrade slopes exceed 5%. • Within 50 feet from the top of slopes that are steeper than 20% gradient.	

DRAFT

BMP	Infeasibility Criteria	Additional Information from Applicant

	• At multi-level parking garages, and over culverts and bridges.
	• For properties with known soil or ground water contamination (typically federal Superfund sites or state cleanup sites under the Model Toxics Control Act (MTCA)):
	  ○ Within 100 feet of an area known to have deep soil contamination;
	  ○ Where ground water modeling indicates infiltration will likely increase or change the direction of the migration of pollutants in the ground water;
	  ○ Wherever surface soils have been found to be contaminated unless those soils are removed within 10 horizontal feet from the infiltration area;
	  ○ Any area where these facilities are prohibited by an approved cleanup plan under the state Model Toxics Control Act or Federal Superfund Law, or an environmental covenant under Chapter 64.70 RCW.
	• Where the site design cannot avoid putting pavement in areas likely to have long-term excessive sediment deposition after construction (e.g., construction and landscaping material yards).*
	• Where the site cannot reasonably be designed to have a porous asphalt surface at less than 5% slope, or a pervious concrete surface at less than 10% slope, or a permeable interlocking concrete pavement surface (where appropriate) at less than 12% slope. *Note:* grid systems upper slope limit can range from 6 to 12%; check with manufacturer and local supplier.
	• Where the native soils below a pollution-generating permeable pavement (e.g., road or parking lot) do not meet the soil suitability criteria for providing treatment. Refer to the Volume III of the DOE Manual, Chapter 3.
	• Where underlying soils are unsuitable for supporting traffic loads when saturated. Soils meeting a California Bearing Ratio of 5% are considered suitable for residential access roads.
	• Where field testing indicates soils have a measured (a.k.a., initial) native soil infiltration rate less than 0.3 inches per hour, permeable pavement facilities without underdrains are not considered feasible.
	• Where road has ADT exceeding 400 vehicles per day (very low volume road) or exceeding very low truck traffic. Areas with very low truck traffic volumes are roads and other areas not subject to through truck traffic but may receive up to weekly use by utility trucks (e.g., garbage, recycling), daily school bus use, and multiple daily use by pick-up trucks, mail/parcel delivery trucks, and maintenance vehicles.	

BMP	Infeasibility Criteria	Additional Information from Applicant
	• Where replacing existing impervious surfaces unless the existing surface is a non-pollution generating surface over an outwash soil with an infiltration rate of four inches per hour or greater. • At sites defined as "high use sites" in Appendix D1. • In areas with "industrial activity" as identified in 40 CFR 122.26(b)(14)*. • Where the risk of concentrated pollutant spills is more likely, including, but not limited to, gas stations, truck stops, and industrial chemical storage sites.* • Where routine, heavy applications of sand occur in frequent snow zones to maintain traction during weeks of snow and ice accumulation.* * These criteria also apply to impervious pavements that would employ stormwater collection from the surface of impervious pavement with redistribution below the pavement. • Where it is infeasible to prevent stormwater run-on to the permeable pavement from unstabilized, erodible areas without adequate pre-settling to prevent clogging of the permeable pavement surface. • Where field testing indicates soils have a measured (a.k.a., initial) native soil infiltration rate less than 0.3 inches per hour permeable pavement are not considered feasible. (Note: field infiltration tests are not required, but may be used to demonstrate infeasibility). • Where the site is a contaminated site or abandoned landfill. • Within 10 feet of an underground storage tank or connecting underground pipes. (Applicable to tanks used to store petroleum products, chemicals, or liquid hazardous wastes). • Where professional geotechnical evaluation recommends permeable pavement not be used anywhere within the project site due to reasonable concerns of erosion, slope failure, or flooding (requires a signed and stamped written determination based on site-specific conditions from an appropriately licensed professional).	

DRAFT

This page intentionally left blank.

Appendix 10. Requirements and standards to be used for Infiltration Feasibility and Design.

D10.1 Roles and Responsibilities of Licensed Professionals

This appendix provides the minimum soil and groundwater investigation requirements for infiltration best management practices (BMPs) feasibility and design. This information does not preclude the use of professional judgment to evaluate and manage risk associated with design, construction, and operation of infiltration BMPs. It is the responsibility of the licensed professional to determine the actual scope of investigation, analysis, and reporting necessary to meet the Standard of Practice with respect to the project and its geotechnical requirements. The report must be signed and sealed by the Geotechnical Engineer or Engineering Geologist, Geologist, or Hydrogeologist.

Recommendations that deviate from the minimum investigation requirements specified in this appendix shall be contained in a stamped and signed letter from a State of Washington licensed Geotechnical Engineer or Engineering Geologist, Geologist, or Hydrogeologist, herein referred to as licensed professional, who has experience in infiltration and groundwater testing and infiltration facility design, and must provide rationale and specific data supporting their professional judgment.

D10.2 Geotechnical/Soils Investigation for Infiltration Feasibility and Design

Refer to Chapter D5 – BMP Design for requirements for infiltration feasibility assessment conducted as part of meeting applicable minimum stormwater requirements. If, after completing Step 1 - Review City of Bellevue Infiltration Feasibility Map and Step 2 - Evaluate Horizontal Setbacks and Site Constraints (Section D5-03.2), areas of a site appear feasible for infiltration, then the standards and requirements in this appendix shall be met for geotechnical/soils investigation (Step 3), infiltration testing (Step 4), determination of design infiltration rate (Step 5), and groundwater monitoring, receptor characterization, and mounding analysis, if applicable (Step 6).

D10.2.1 Step 3 - Subsurface Exploration

This section discusses components of a subsurface exploration program for infiltration feasibility/infeasibility and design. Exploration programs will range in size from a single round of shallow backhoe pits to several phases of exploration, monitoring and testing. Prior to conducting explorations, the applicant and licensed professional should review recommendations and requirements for: 1) general exploration number and location; 2) investigation depth; 3) seasonal timing; 4) vertical separation requirements; 5) soil physical and chemical suitability for treatment; and 6) groundwater monitoring wells. Careful planning and scheduling of a subsurface exploration program will make for a more efficient application.

General Exploration Number and Location: The Geotechnical/Soils Report (report) shall reference a sufficient number of soils logs to establish the type and limits of soils on the project site. The report shall at a minimum identify the limits of any outwash type soils (i.e., those meeting USDA soil texture classes ranging from coarse sand and cobbles to medium sand) versus other

soil types and include an inventory of topsoil depth. At least one subsurface exploration shall be performed at the site of each proposed infiltration facility, unless demonstrated to be infeasible. In such cases, the subsurface exploration shall be performed as close as possible, but no more than 50 feet away, to obtain relevant subsurface information. Minimum recommendations for number of explorations are described in Table D10.1.

Investigation Depth: Explorations for basic infiltration feasibility should extend to a minimum of 6 feet below existing ground surface for all engineered infiltration BMPs. Required exploration depths for infiltration design are described in Table D10.1. The subsurface exploration depth must be sufficient to assess depth to shallow groundwater and hydraulically-restrictive layers. Exploration depths are greater for larger systems or if work is conducted in the dry season. Explorations need not extend beyond perching layers or groundwater seepage zones/water table if encountered.

Seasonal Timing: Exploration conducted for infiltration design should be performed in the wet season (December through March) if possible, when soils may contain a higher water content and groundwater levels are typically higher. If conducted during the dry season, additional data (such as deeper explorations, installation of monitoring wells, seasonal water level monitoring, or performance testing) may be required to demonstrate separation from seasonal high groundwater. Explorations conducted for infeasibility documentation do not have a seasonal timing requirement (i.e., if seepage or perching layers are encountered at very shallow depths during the dry season, infiltration can be considered infeasible).

Vertical Separation Requirements: The minimum vertical separation required from shallow groundwater and/or shallow hydraulically-restrictive layers varies between 1 and 5 feet, depending on BMP type (Section D5-03.2). The vertical separation requirement is measured below the bottom of the proposed infiltration BMP. The bottom of the infiltration facility is defined as the deepest portion of the proposed facility where infiltrating water is expected to move into the underlying soil (such as the lowest level of permeable pavement base course or base of bioretention soil mix layer).

If groundwater seepage or a hydraulically-restrictive material is encountered within the vertical separation depth, then infiltration is considered to be infeasible at that location, and no further investigation is required.

Examples of materials that may be interpreted as hydraulically-restrictive include:

- Glacially consolidated soil that has a fines content (sediment passing the #200 sieve) of more than 20% per *American Society for Testing and Materials* (ASTM) D-6913 (*Standard Test Methods for Particle-Size Distribution (Gradation) of Soils Using Sieve Analysis*)
- Soil classified as a SILT or finer per ASTM D2488, *Standard Recommended Practice for Description of Soils*
- Bedrock

Soil Physical and Chemical Suitability for Treatment: Note that if the infiltration facility will provide treatment as well as flow control, the soil characterization should also include cation

exchange capacity (CEC) and organic matter content testing for the infiltration receptor horizon to a depth below the base of the facility of at least 2.5 times the maximum design water depth, but not less than 6 feet. Refer to the DOE Manual, Volume III, Section 3.3.7 - Site Suitability Criteria, *SSC-6 Soil Physical and Chemical Suitability for Treatment*. For soils with low CEC and organic content, deeper characterization of soils may be needed.

Groundwater Monitoring Wells: Groundwater level monitoring is required for projects that infiltrate: 1) at least 5,000 square feet (SF) of pollution generating hard surface (PGHS), 2) 10,000 SF of hard surface; 3) ¾ acres of pervious surface; or have 4) 1 acre total tributary area. The groundwater monitoring well(s) (or driven well point(s) if expected depth to groundwater is less than 10 feet) should be installed to locate the groundwater table and establish its gradient, direction of flow, and seasonal variations, considering both confined and unconfined aquifers. For facilities serving a drainage area less than an acre, establish that the depth to groundwater or other hydraulic restriction layer will be at least 10 feet below the base of the facility. Use subsurface explorations or information from nearby wells, or complete a monitoring well. Monitoring through at least one wet season is required, unless substantially equivalent site historical data regarding groundwater levels is available.

For projects where groundwater flow direction determinations are required, a minimum of 3 (three) wells per infiltration facility, or 3 (three) hydraulically connected surface or groundwater features, are needed to determine the direction of flow and gradient. If in the assessment of the licensed professional, the surrounding site conditions indicate that gradient and flow direction are not critical (e.g., there is low risk of down-gradient impacts) one monitoring well may be sufficient.

Alternative means of establishing the groundwater levels may also be considered. If the groundwater in the area is known to be greater than 50 feet below the proposed facility and the site is located more than 500 feet from a steep slope or landslide hazard area, detailed investigation of the groundwater regime is not necessary.

DRAFT

Table D10.1 City of Bellevue Minimum Subsurface Exploration Recommendations

Contributing Drainage Area/Facility Type	Minimum Exploration Depth [a,b]		Number of Explorations for Facility Design [b]	Groundwater Well Requirement For Facility Design
	Wet Season	Dry Season		
10 acres or larger	50 feet below base of proposed BMP	60 feet base of proposed BMP	1 or more per 5,000 SF of facility subgrade and at least 2 per facility (except for infiltration trenches or bioretention swales); OR 1 or more per 200 feet of trench or bioretention swale length and at least 2 per trench or bioretention swale.	1 well required to demonstrate depth to SHGW. 3 wells required if depth to SHGW is <50 feet.
Meets or exceeds: 1) 5,000 SF of PGHS, 2) 10,000 SF of hard surface; 3) ¾ acres of pervious surface; or 4) 1 acre total tributary area	15 feet, or at least 5 times the max design depth of ponded water proposed for the infiltration BMP, whichever is greater	25 feet base of proposed BMP		1 well required to demonstrate depth to SHGW. 3 wells required if depth to SHGW <15 feet
Less than: 1) 5,000 SF of PGHS, 2) 10,000 SF of hard surface; 3) ¾ acres of pervious surface; or 4) 1 acre total tributary area	10 feet below base of proposed BMP	20 feet base of proposed BMP	1 or more per 5,000 SF of facility subgrade and at least 1 per facility; OR 1 or more per 200 feet of trench, bioretention swale length and at least 1 per trench or bioretention swale.	1 well required if depth to SHGW is <10 feet.
Permeable Pavement with No Run-on	6 feet below existing ground surface or 3 feet below base of proposed BMP, whichever is greater	10 feet base of proposed BMP		Not required
Individual NPGHS Roof [c] infiltration system (contributing roof area 2,000 SF or less)			One per facility	Not required

Notes:

BMP – Best Management Practice
PGHS – Pollutant-Generating Hard Surface
NPGIS – Non-pollutant-generating Hard Surface
SF – Square Feet
SHGW – Seasonal High Groundwater

a. Minimum Exploration Depth measured from the bottom of the proposed infiltration facility. Explorations may be terminated at shallower depths if bedrock, a hydraulically-restrictive layer or groundwater seepage is encountered within the minimum exploration depth.
b. The depth and number of test holes or test pits, and samples should be increased, if in the judgment of a licensed geotechnical engineer, a licensed geologist, engineering geologist, hydrogeologist, the conditions are highly variable and such increases are necessary to accurately estimate the performance of the infiltration BMP. The exploration program may also be decreased if, in the opinion of the licensed engineer or other professional, the conditions are relatively uniform and the borings/test pits omitted will not influence the design or successful operation of the facility.
c. See DOE Manual for roofing materials considered non-pollution generating.

DRAFT

DRAFT

D10.2.2 Step 4 - Conduct Infiltration Testing

Refer to Section D5-03.2.4 of the Standards for infiltration testing requirements.

D10.2.3 Step 5 - Determine Design Infiltration Rate

The Ksat obtained from the Small or Large PIT test is a measured (initial) rate. This measured rate must be reduced through correction factors that are appropriate for the design situation to produce a design infiltration rate. The design infiltration rate is determined by applying correction factors to the measured infiltration rate. In some cases, a groundwater mounding analysis is required to evaluate the design infiltration rate. In other cases, groundwater mounding is used to assess lateral flow risks (D10.2.4).

Correction Factors: City of Bellevue correction factors are summarized in Table D10.2 in this document. Table D10.2 summarizes the typical range of correction factors that attempt to account for site variability and number of tests conducted, uncertainty of the test method, and the potential for long-term clogging due to siltation and bio-buildup. The correction factors are based in part on the DOE Manual, Volume III, Chapter 3.3, Section 3.3.6, Table 3.3.1 and Volume III, Chapter 3.4, Section 3.2, Table 3.4.1 and Table 3.4.2.

The specific correction factors used shall be determined based on the professional judgment of the licensed professional considering all issues that may affect the infiltration rate over the long term, subject to the approval of the City. The site variability factor should include considerations for the inherent uncertainties in sedimentary depositional environments, depth to the water table or perching layers, and infiltration receptor geometry including lateral and vertical extent.

The correction factor(s) are applied to the measured infiltration rate to calculate the design infiltration rate. The design infiltration rate shall be used when sizing infiltration BMPs using the design criteria outlined in Chapter D5.

$$\textit{Design Infiltration Rate} = \textit{Measured Infiltration Rate} \times CF_V \times CF_T \times CF_M$$

In no case shall the design infiltration rate exceed 10 inches per hour.

D10.2.4 Step 6 – Conduct Groundwater Monitoring, Receptor Characterization, Mounding and Seepage Analysis

Refer to Section D5-03.2.6 for groundwater monitoring, receptor characterization, mounding and seepage analysis requirements.

DRAFT

Table D10.2 Recommended Infiltration Test Methods and Minimum Correction Factors to be Used With In-Situ Saturated Hydraulic Conductivity Measurements to Estimate Design Rates.

Contributing Drainage Area/Facility Type	Correction Factor for Site Variability CF_V	Test Method	Correction Factor for Test Method CF_T	Correction Factor for Maintenance CF_M	Groundwater Mounding Assessment
10 acres or larger	CF_V= 0.33 to 1	Large PIT	CF_T = 0.75	CF_M = 0.9	If depth to SHGW or perching layer is <50 feet from facility base
Meets or exceeds: 1) 5,000 SF of PGHS, 2) 10,000 SF of hard surface; 3) ¾ acres of pervious surface; or 4) 1 acre total tributary area	CF_V = 0.33 to 1	Large PIT or Small PIT	CF_T = 0.75 CF_T = 0.5	CF_M = 0.9	If depth to SHGW or perching layer is <15 from facility base
Less than: 1) 5,000 SF of PGHS, 2) 10,000 SF of hard surface; 3) ¾ acres of pervious surface; or 4) 1 acre total tributary area	CF_V = 0.33 to 1	Large PIT or Small PIT	CF_T = 0.75 CF_T = 0.5	CF_M = 0.9 to 1 Exception: For Bioretention, CF_M = 1 (not applicable)	If depth to SHGW or perching layer is <10 feet from facility base OR To support a vertical separation reduction from 5 to 3 feet.
Permeable Pavement with No Run-on	CF_V = 0.33 to 1	Large PIT or Small PIT	CF_T = 0.75 CF_T = 0.5	CF_M = 0.9 to 1	Not Required
Individual NPGIS Roof [a] infiltration system (contributing roof area 2,000 SF or less)	CF_V = 0.33 to 1	Large PIT or Small PIT	CF_T = 0.75 CF_T = 0.5	CF_M = 0.9 to 1	Not Required
	Not applicable	USDA Soil Triangle Correlation for Outwash-Type Soils, Medium-Grained or Coarser	Not applicable	Not applicable	Not Required

Notes:

PGHS – Pollutant-Generating Hard Surface
NPGHS – Non-pollutant-generating Hard Surface
SF – Square Feet
SHGW - Seasonal High Groundwater
a – Refer to the DOE Manual for roofing materials considered non-pollution generating.

DRAFT

DRAFT